LG
Life's Good

MULTI V™ WATER II

ENGINEERING MANUAL



Variable Refrigerant Flow Water Source Units
6.0 to 48.0 Tons

PROPRIETARY DATA NOTICE

This document, as well as all reports, illustrations, data, information, and other materials are the property of LG Electronics U.S.A., Inc., and are disclosed by LG Electronics U.S.A., Inc., only in confidence.
This document is for design purposes only.

VRF-EM-BF/BL-001-US 013D23 2013

For continual product development, LG Electronics U.S.A., Inc., reserves the right to change specifications without notice.
©LG Electronics U.S.A., Inc.

This document, as well as all reports, illustrations, data, information, and other materials are the property of LG Electronics U.S.A., Inc.

About LG Electronics, Inc.

LG Electronics, Inc. is a global leader and technology innovator in consumer electronics, mobile communications, and home appliances, employing more than 213,000 people in more than 60 countries worldwide. LG Electronics comprises five business units—Home Entertainment, Mobile Communications, Air Conditioning, Business Solutions, and Home Appliance. LG is one of the world's leading producers of flat panel televisions, audio and video products, mobile handsets, air conditioners, and washing machines. LG's commercial air conditioning business unit was established in 1968 and has built its lineup of residential and commercial products to include VRF, Multi F, duct-free split (DFS) systems, packaged terminal air conditioners (PTACs), and room air conditioners. In 2011, the air conditioning and energy solutions business unit grew to include LED lighting and solar products. For more information, visit www.lg-hvac.com.

Variable Refrigerant Flow (VRF) Technology

In the early 1980s, VRF technology was introduced to the world as an alternative method of cooling and heating in commercial structures and is designed to minimize utility consumed. VRF systems have become the system of choice for designers internationally because these systems offer better comfort at substantially lower operating costs when compared to traditional boiler/chiller/VAV air handler systems.

Older systems are being replaced with newer more efficient systems. VRF is a viable option for offering efficiencies in this range. Today, VRF is gaining popularity in the United States.

LG Multi V water source systems offer the opportunity to eliminate ductwork in the same configuration. The system offers zoning without the need for zone damper systems. The LG Multi V water source system's advanced controls provide exceptional building dehumidification and temperature control and can rapidly adapt system operating parameters to the ever changing building load. The LG Multi V Water II water source system is easy to design, install, and maintain. The modular design allows occupants to control their environmental condition providing individualized control of the set-point temperature and allow occupants to condition only the zones being used.

Quality Commitment

LG is committed to the success of every Multi V project by providing the best industry technical support during project engineering, installation, and commissioning. LG offers a variety of classes designed for engineers, architects, installers, and servicers to ensure that every Multi V installation is completed successfully. Classes are conducted at LG's training centers and in field locations at various times throughout the year and upon special request.



MULTI V™ WATER II

TABLE OF CONTENTS

INTRODUCTION 8
- Architectural Appeal 9
- Engineers Advantage 10

PRODUCT DATA 12
- Product Features and Benefits 14
- Unit Nomenclature 15
- General Data 17

PERFORMANCE DATA 40
- Electrical Characteristics 161
- Acoustic Data 163
- Sound Pressure Level 164
- Refrigerant Flow Diagrams 166
- Wiring Diagrams 180

SYSTEM ENGINEERING 188
- Building Ventilation 189
- Equipment Selection Procedure 192
- Placement Considerations 201
- Refrigerant Pipe Design 204
- Refrigerant Piping Installation 211
- System Refrigerant Charge 218
- Field Installation 220
- Jobsite Connections 225

WATER LOOP CIRCUIT DESIGN 234
- Water Design Guide 235
- Variable Water Flow Control Kit 240

CUT-SHEETS 248

CONTROLS 264
- Zone Controllers 265
- Zone Controller Communication Cables 265
- Specialty Application Devices 266
- Central Controllers 267
- Integration Solutions 267

U.S. DESIGN STANDARDS 268
- ASHRAE Standards Summary 269
- Building Sustainability 273

SPECIFICATIONS 275
- Mechanical Specifications 275

ACRONYMS 277

INTRODUCTION

“Architectural Appeal” on page 9
“Engineers Advantage” on page 10

ARCHITECTURAL APPEAL

Convergence of Technological Innovation with Flexibility and Style

Benefits of the Multi V Water II

- Maximized individual occupant control requirements
- Longest refrigerant piping lengths
- Highest elevation differences
- Maximum flexibility
- Quiet and comfortable environment
- Geothermal ready





Multi V Water II

Multi V Water II is among the industry's best with vertical rise and piping lengths, so choosing the LG Multi V Water II variable refrigerant flow system provides the designer with the most freedom and flexibility while engineering the refrigerant pipe system. Multi V Water II, available in 208–230 volt/3 phase and 460 volt/3 phase, ranges in size from 6 to 48 nominal tons, and is available as a heat pump system or heat recovery system. Multi V Water II Heat Pump is a two-pipe heat pump system consisting of a water source heat pump, indoor units, and a field-supplied refrigerant pipe system incorporating LG-supplied Y-Branches and Header kits. Multi V Water II Heat Pump is best suited for applications with thermal zones that require heating at the same time or cooling at the same time, like perimeter zones with the same exposure.

Multi V Water II Heat Recovery is a three-pipe heat recovery system consisting of a water source heat pump, heat recovery units, indoor units, and a field-supplied refrigerant pipe system incorporating LG-supplied Y-Branch kits. Multi V Water II Heat Recovery is best suited for applications with dissimilar thermal zones that require heating or cooling simultaneously. Perimeter zones with different exposures and interior zones can be mixed using Multi V II Heat Recovery.

Adaptable and Flexible

Multi V water source units can be adapted to a wide range of building types and sizes such as schools, hotels, hospitals, offices, and residences. Their light weight and small footprint allows them to be moved without expensive cranes, easily fitting into most service elevators, and set in place with minimal requirements for structural reinforcements. Its modular design means Multi V Water II can be commissioned in stages so tenants can move in as each floor (or even each room) is completed.

The split system allows you to minimize components by reaching an area of the building that might otherwise require a second system. The Multi V system is capable of the longest piping lengths and largest elevation differences in the industry, allowing maximum flexibility in the placement of outdoor condensing units and indoor units. Whether your building is a high rise condominium, a hotel, or a sprawling school or office complex, this system will reach even the farthest corners and elevations.



Smaller Chases and Plenums

The LG Multi V system uses refrigerant piping to move heat resulting in smaller space requirements compared to water piping or air ducts. This helps reduce the overall construction and material cost of your building and gives back leasable space. Flexible and logical placement of system components, shorter pipe lengths, and fewer joints lowers installed cost and minimizes potential for leaking.

Due to our policy of continuous product innovation, some specifications may change without notification.
©LG Electronics U.S.A., Inc., Englewood Cliffs, NJ. All rights reserved. "LG" is a registered trademark of LG Corp.

ENGINEERS ADVANTAGE

System Design and Analysis Tools

Intuitive Design

The LATS Multi V design and layout software provides an intuitive method of laying out a Multi V Water II refrigerant pipe system. LATS Multi V checks piping lengths and elevations, and it assists with the sizing of indoor and water source units by calculating component capacity based on design conditions. LATS Multi V is the industry's only software that can import AutoCAD™ drawings and lay out the Multi V system to scale. When the designer finishes the AutoCAD™ system layout, all of the piping lengths will be calculated, and a drawing file with the Multi V system will be available for export and integration into the building drawing set.



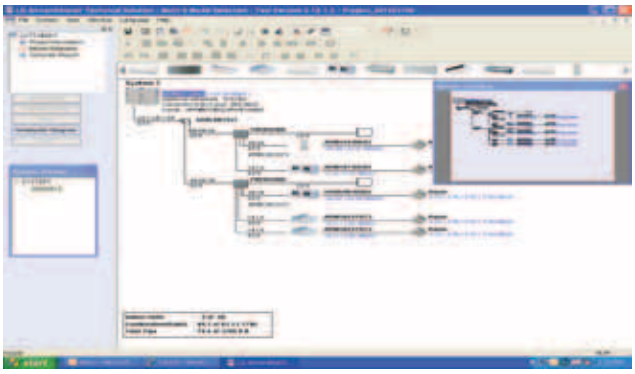



Energy Modeling

LG stands behind efficiency and performance. You will find Multi V in the EnergyPro™ building energy simulation software from EnergySoft®. EnergyPro™ is approved by the California Energy Commission to accurately model and provide necessary documentation to comply with the rigourous California Title 24 Standards, ASHRAE 90.1 compliance, and calculate the number of LEED Energy and Atmosphere Credit 1 (EA-1)—Building Energy Efficiency credits earned by the design team. The software accurately models utility consumption and utility costs based on building design, orientation, location, and other design conditions.



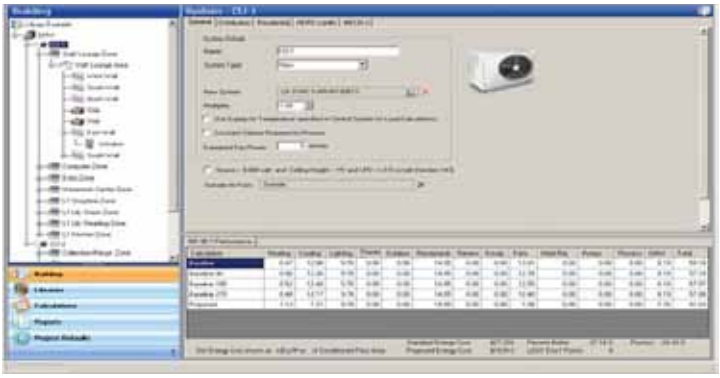

Due to our policy of continuous product innovation, some specifications may change without notification.
©LG Electronics U.S.A., Inc., Englewood Cliffs, NJ. All rights reserved. "LG" is a registered trademark of LG Corp.

PRODUCT DATA

“Product Features and Benefits” on page 14
“Unit Nomenclature” on page 15
“General Data” on page 17



Due to our policy of continuous product innovation, some specifications may change without notification.
©LG Electronics U.S.A., Inc., Englewood Cliffs, NJ. All rights reserved. "LG" is a registered trademark of LG Corp.

PRODUCT FEATURES AND BENEFITS

Quiet Operation and Integrated Controls

Low Sound Levels

LG customers often ask if the unit is running after commissioning is complete. When Multi V water source units operate fully loaded, they are one of the quietest levels in the industry. The sound is almost undetectable during off-peak operation.

All rotating component are soft-started by the controller using a digitally-controlled inverter, which reduces undesirable noise caused by fans and compressors cycling on and off.

Comfort Control at its Best

Tight temperature control through precise load matching maximizes the time that the indoor units remove moisture. This ensures maximum comfort and delivers the comfortable indoor humidity levels.

Precision Load Matching

Unlike traditional air conditioning control systems that use thermostatic controls to maintain room temperatures, the LG Multi V controls continuously vary the indoor unit fan speed and refrigerant flow. The water source unit responds by varying the compressor speed as needed to meet the indoor unit's demand. As a result, the Multi V system delivers precise space temperature control without overshooting the set point. Temperature drift in the thermal zone is minimized, since the fan speed and refrigerant volume are controlled together precisely matching the load.

Advanced Compressor Technology

Oil Management

The oil injection mechanism ensures a reliable oil film on moving parts even at the lowest speeds, which enables the inverter compressor to safely operate at speeds as low as 25 Hz. The following three-stage return system brings oil back to the compressor once the oil leaves the compressor, so oil migration is no longer a concern.

1. The compressor discharge is specially designed to minimize the amount of oil leaving the compressor.
2. An oil serparator brings oil back to the compressor after discharge.
3. Oil return algorithms flush the oil from the system back to the compressor.

Inverter Driven

The scroll compressor is optimized around the R410A model to maximize compressor efficiency, which reduces power consumption and lowers utility bills. The latest inverter technology allows the LG Multi V to precisely match the load, which prevents constant cycling and results in tight temperature control, superior dehumification, and optimized efficiency. Occupants remain comfortable while utility costs are reduced.

Simplified Installation

Cooling and heating systems that use the LG Multi V simplify and reduce the mechanical and control system design time. The designer no longer has to be concerned with interconnecting chilled water piping or air distribution duct systems, or matching and selecting chillers, fans, air handlers, or Variable Air Volume (VAV) boxes.

System integration with existing building management systems has never been easier. Since all of the Multi V system components are engineered and provided by LG, the system components and controls come pre-engineered and do not need any custom programming from third-party contractors.

Operating Range and Size

Wide Operating Range (6–48 Tons)

The water source unit can operate from 50°F–113°F entering water temperature in cooling mode and 23°F–113°F entering water temperature in heating mode. The connected indoor unit combination ratio range is 50%–130%.

Compact Size

Up to 16 tons capacity fits into the 30-7/16 inch (width) x 21-9/16 inch single-chassis footprint. Multiple units can be stacked using an independent racking system giving back valuable floor space.

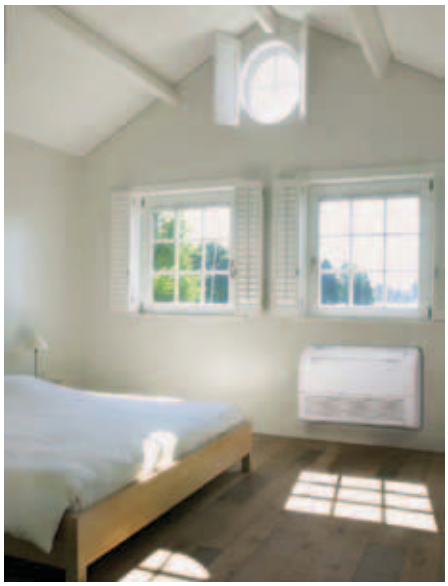

Due to our policy of continuous product innovation, some specifications may change without notification.
©LG Electronics U.S.A., Inc., Englewood Cliffs, NJ. All rights reserved. "LG" is a registered trademark of LG Corp.

UNIT NOMENCLATURE

Water Source and Heat Recovery Units

Water Source Units (WSU)

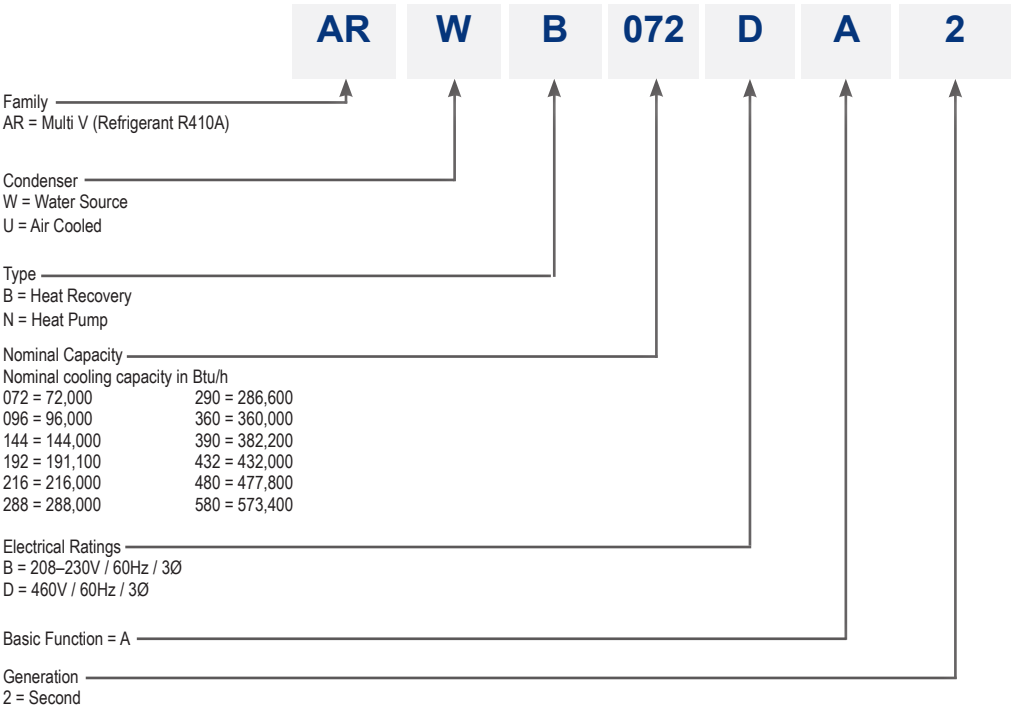

Heat Recovery Units (HR)

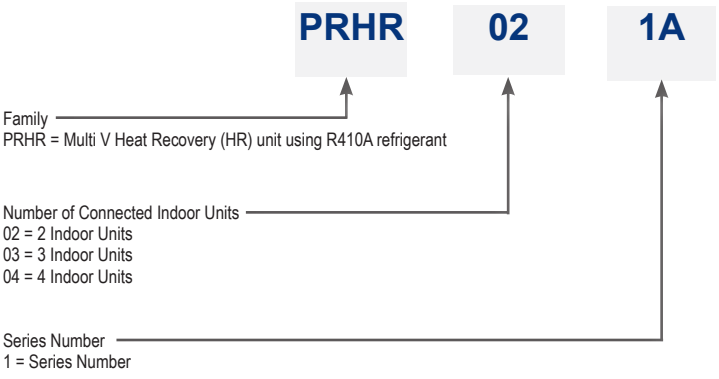

Due to our policy of continuous product innovation, some specifications may change without notification.
©LG Electronics U.S.A., Inc., Englewood Cliffs, NJ. All rights reserved. "LG" is a registered trademark of LG Corp.

Indoor Units (IDU)

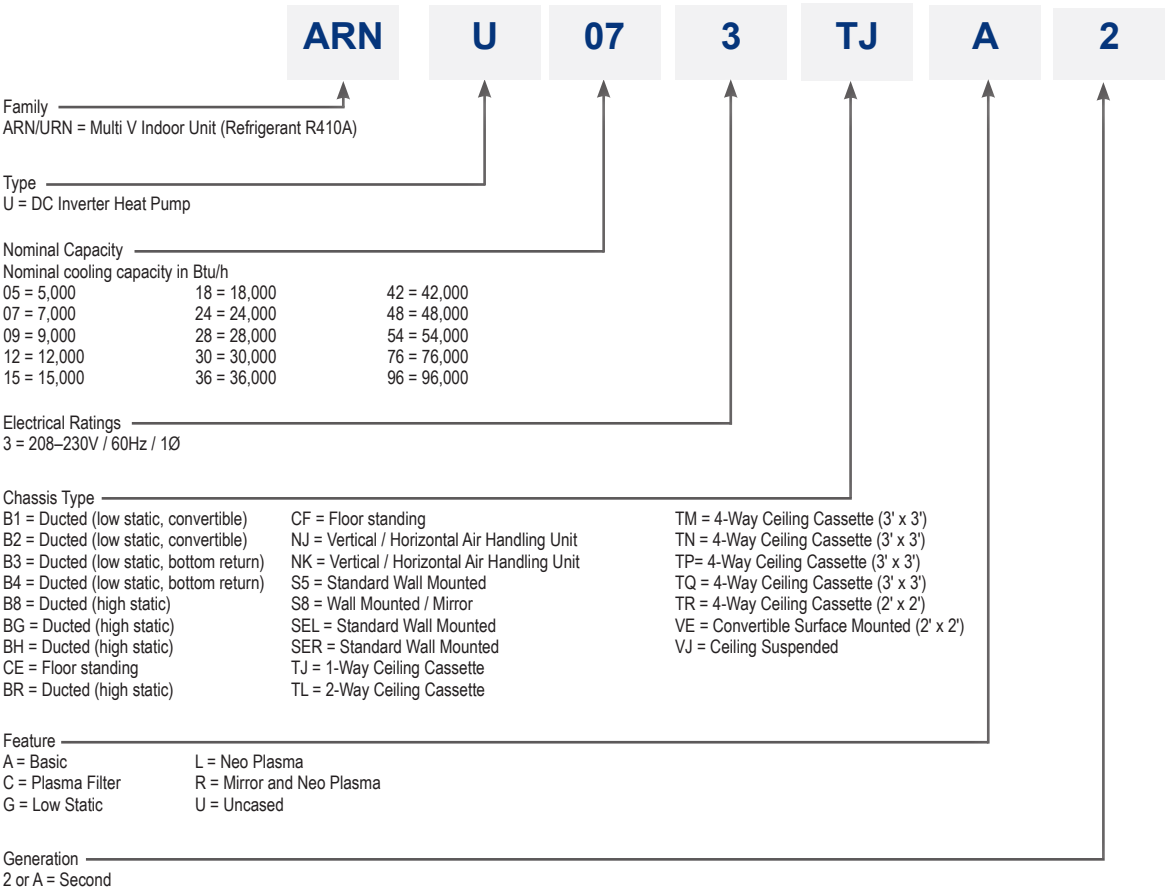

Due to our policy of continuous product innovation, some specifications may change without notification.
©LG Electronics U.S.A., Inc., Englewood Cliffs, NJ. All rights reserved. "LG" is a registered trademark of LG Corp.

GENERAL DATA

Water Source Unit—Heat Recovery

Table 1a: General Data—Heat Recovery—ARWB072BA2, ARWB144BA2, ARWB216BA2

	6 Ton ARWB072BA2	12 Ton ARWB144BA2	18 Ton
Combination Unit Model Number			ARWB216BA2[8]
Individual Component Model Number	ARWB072BA2	ARWB144BA2	(ARWB144BA2 + ARWB-072BA2)
Cooling Mode Performance			
Nominal Capacity (Btu/h)[2]	72,000	144,000	216,000
Rated Capacity[1]	69,000	138,000	206,000
Heating Mode Performance			
Nominal Capacity (Btu/h)[2]	81,000	162,000	243,000
Rated Capacity[1]	77,000	154,000	232,000
Compressor			
Type	DC Inverter Scroll	DC Inverter Scroll + Constant Scroll	(DC Inverter Scroll) x 2 + Constant Scroll
Power Supply (V/Hz/Ø)[3]	208–230/60/3	208–230/60/3	208–230/60/3
MCA (A)	21	42.5	42.5 + 21
MOP (A)	35	60	60 + 35
Max Starting Current (A)	—	103.9	103.9
Unit Data			
Sound Pressure Cooling/Heating (dB(A))[4]	49	50	51
Heat Rejected to Equipment Room (Btu/h)	1707	1707	1707 + 1707
Net Weight (lbs)	375	525	525 + 375
Shipping Weight (lbs)	405	556	556 + 405
W x H x D (in)	30-7/16 x 44-1/8 x 21-9/16	30-7/16 x 44-1/8 x 21-9/16	(30-7/16 x 44-1/8 x 21-9/16) + (30-7/16 x 44-1/8 x 21-9/16)
Maximum Number Indoor Units/System	16	32	49
Refrigerant Charge R410A	16.1	19.4	19.4 + 16.1
Refrigerant Connection[5]			
Vapor Line High OD (in)	3/4 Flare	7/8 Braze	7/8 Braze + 3/4 Flare
Vapor Line Low OD (in)	7/8 Braze	1-1/8 Braze	1-1/8 Braze + 7/8 Braze
Liquid Line OD (in)	3/8 Flare	1/2 Flare	1/2 Flare + 3/8 Flare

1. Rated capacity = AHRI Standard 1230. Ratings are based on non-ducted indoor units. Refer to the AHRI web site at www.ahridirectory.org for information.
2. Nominal capacity is outside of AHRI Standard 1230.
3. The voltage tolerance is ±10%.
4. Sound pressure levels as tested in anechoic chamber under ISO Standard 1996.
5. Refer to “Refrigerant Pipe Design” starting on page 204 for correct line sizing. The contractor must use LG manufactured Y-Branch fittings only. The designer must verify refrigerant piping design configuration using LATS MultiV software to layout and design the refrigerant piping system.
6. Maximum working water pressure is 287 psig.
7. Calculated from Δt = Total Heat of Rejection/(Nominal flow rate x 500).
8. Requires ARCNB21 connecting branch pipes to connect components.

Due to our policy of continuous product innovation, some specifications may change without notification.
©LG Electronics U.S.A., Inc., Englewood Cliffs, NJ. All rights reserved. “LG” is a registered trademark of LG Corp.

Table 1b: General Data—Heat Recovery—ARWB072BA2, ARWB144BA2, ARWB216BA2

	6 Ton ARWB072BA2	12 Ton ARWB144BA2	18 Ton
Combination Unit Model Number			ARWB216BA2[8]
Individual Component Model Number	ARWB072BA2	ARWB144BA2	(ARWB144BA2 + ARWB072BA2)
Water Heat Exchanger[6] (Stainless Steel Plate)			
Water Inlet/ Outlet Connection Size (in)	1-1/4 FPT	1-1/2 FPT	1-1/2 FPT+1-1/4FPT
Condensate Drain (in)	3/4	3/4	3/4 + 3/4
Nominal Flow Rate (GPM) Total = a + b	21.1	42.2	63.3 (42.2 + 21.1)
Range of Flow (GPM)	10.6–26.4	21.2–52.8	31.8–79.2
Cooling Entering Water Temperature Range (°F)	50–113	50–113	50–113
Heating Entering Water Temperature Range (°F)	23–113	23–113	23–113
Total Heat of Rejection (Btu/h)	87,032	174,063	261,095
Total Heat of Absorption (Btu/h)	65,974	130,787	196,249
Pressure Drop (ft-wg)	8.9	14.4	14.4 + 8.9
Δt (°F)[7]	8.2	8.2	8.2

1. Rated capacity = AHRI Standard 1230. Ratings are based on non-ducted indoor units. Refer to the AHRI web site at www.ahridirectory.org for information.
2. Nominal capacity is outside of AHRI Standard 1230.
3. The voltage tolerance is ±10%.
4. Sound pressure levels as tested in anechoic chamber under ISO Standard 1996.
5. Refer to “Refrigerant Pipe Design” starting on page 204 for correct line sizing. The contractor must use LG manufactured Y-Branch fittings only. The designer must verify refrigerant piping design configuration using LATS MultiV software to layout and design the refrigerant piping system.
6. Maximum working water pressure is 287 psig.
7. Calculated from Δt = Total Heat of Rejection/(Nominal flow rate x 500).
8. Requires ARCNB21 connecting branch pipes to connect components.

Due to our policy of continuous product innovation, some specifications may change without notification.
©LG Electronics U.S.A., Inc., Englewood Cliffs, NJ. All rights reserved. “LG” is a registered trademark of LG Corp.

GENERAL DATA

Water Source Unit—Heat Recovery

Table 2a: General Data—Heat Recovery—ARWB288BA2, ARWB360BA2, ARWB432BA2

	24 Ton	30 Ton	36 Ton
Combination Unit Model Number	ARWB288BA2[8]	ARWB360BA2[9]	ARWB432BA2[9]
Individual Component Model Number	(ARWB144BA2) x 2	(ARWB144BA2) x 2 + ARWB072BA2	(ARWB144BA2) x 3
Cooling Mode Performance			
Nominal Capacity (Btu/h)[2]	288,000	360,000	432,000
Rated Capacity[1]	274,000	N/A	N/A
Heating Mode Performance			
Nominal Capacity (Btu/h)[2]	324,000	405,000	486,000
Rated Capacity[1]	308,000	N/A	N/A
Compressor			
Type	(DC Inverter Scroll) x 2 + (Constant) x 2	(DC Inverter Scroll) x 3 + (Constant) x 2	(DC Inverter Scroll) x 3 + (Constant) x 3
Power Supply (V/Hz/Ø)[3]	208–230/60/3	208–230/60/3	208–230/60/3
MCA (A)	42.5 + 42.5	42.5 + 42.5 + 21	42.5 + 42.5 + 42.5
MOP (A)	60 + 60	60 + 60 + 35	60 + 60 + 60
Max Starting Current (A)	103.9 + 103.9	103.9 + 103.9	103.9 + 103.9 + 103.9
Unit Data			
Sound Pressure (dB(A))[4]	52	53	54
Heat Rejected to Equipment Room (Btu/h)	1707 + 1707	1707 + 1707 + 1707	1707 + 1707 + 1707
Net Weight (lbs)	525 + 525	525 + 525 + 375	525 + 525 + 525
Shipping Weight (lbs)	556 + 556	556 + 556 + 405	556 + 556 + 556
W x H x D (in)	(30-7/16 x 44-1/8 x 21-9/16) x 2	(30-7/16 x 44-1/8 x 21-9/16) x 3	(30-7/16 x 44-1/8 x 21-9/16) x 3
Maximum Quantity Indoor Units	64	64	64
Refrigerant Charge R410A	19.4 + 19.4	19.4 + 19.4 + 16.1	19.4 + 19.4 + 19.4
Refrigerant Connection[5]			
Vapor Line High OD (in)	7/8 Braze + 7/8 Braze	7/8 Braze + 7/8 Braze + 3/4 Braze	7/8 Braze + 7/8 Braze + 7/8 Braze
Vapor Line Low OD (in)	1-1/8 Braze + 1-1/8 Braze	1-1/8 Braze + 1-1/8 Braze + 7/8 Braze	1-1/8 Braze + 1-1/8 Braze + 1-1/8 Braze
Liquid Line OD (in)	1/2 Flare + 1/2 Flare	1/2 Flare + 1/2 Flare + 3/8 Flare	1/2 Flare + 1/2 Flare + 1/2 Flare

1. Rated capacity = AHRI Standard 1230. Ratings are based on non-ducted indoor units. Refer to the AHRI web site at www.ahridirectory.org for information.
2. Nominal capacity is outside of AHRI Standard 1230.
3. The voltage tolerance is ±10%.
4. Sound pressure levels as tested in anechoic chamber under ISO Standard 1996.
5. Refer to “Refrigerant Pipe Design” starting on page 204 for correct line sizing. The contractor must use LG manufactured Y-Branch fittings only. The designer must verify refrigerant piping design configuration using LATS MultiV software to layout and design the refrigerant piping system.
6. Maximum working water pressure is 287 psig.
7. Calculated from Δt = Total Heat of Rejection/(Nominal flow rate x 500).
8. Requires ARCNB21 connecting branch pipes to connect components.
9. Requires ARCNB21 and ARCNB31 connecting branch pipes to connect components.

Due to our policy of continuous product innovation, some specifications may change without notification.
©LG Electronics U.S.A., Inc., Englewood Cliffs, NJ. All rights reserved. “LG” is a registered trademark of LG Corp.

Table 2b: General Data—Heat Recovery—ARWB288BA2, ARWB360BA2, ARWB432BA2

	24 Ton	30 Ton	36 Ton
Combination Unit Model Number	ARWB288BA2[8]	ARWB360BA2[9]	ARWB432BA2[9]
Individual Component Model Number	(ARWB144BA2) x 2	(ARWB144BA2) x 2 + ARWB-072BA2	(ARWB144BA2) x 3
Water Heat Exchanger[6] (Stainless Steel Plate)			
Water Inlet/ Outlet Connection Size (in)	1-1/2 FPT + 1-1/2 FPT	1-1/2 FPT + 1-1/2 FPT + 1-1/4FPT	1-1/2 FPT + 1-1/2 FPT + 1-1/2FPT
Condensate Drain (in)	3/4 + 3/4	3/4 + 3/4 + 3/4	3/4 + 3/4 + 3/4
Nominal Flow Rate (GPM) Total = a + b + c	84.4(42.2 + 42.2)	105.5 (42.2 + 42.2 + 21.1)	126.6(42.2 + 42.2 + 42.2)
Range of Flow (GPM)	42.4–105.6	63.6–158.4	79.2–190.2
Cooling Entering Water Temperature Range (°F)	50–113	50–113	50–113
Heating Entering Water Temperature Range (°F)	23–113	23–113	23–113
Total Heat of Rejection (Btu/h)	348,126	435,158	522,189
Total Heat of Absorption	261,574	327,036	392,497
Pressure Drop (ft)	14.4 + 14.4	14.4 + 14.4+8.9	14.4 + 14.4 + 14.4
Δt (°F)[7]	8.2	8.2	8.2

1. Rated capacity = AHRI Standard 1230. Ratings are based on non-ducted indoor units. Refer to the AHRI web site at www.ahridirectory.org for information.
2. Nominal capacity is outside of AHRI Standard 1230.
3. The voltage tolerance is ±10%.
4. Sound pressure levels as tested in anechoic chamber under ISO Standard 1996.
5. Refer to “Refrigerant Pipe Design” starting on page 204 for correct line sizing. The contractor must use LG manufactured Y-Branch fittings only. The designer must verify refrigerant piping design configuration using LATS MultiV software to layout and design the refrigerant piping system.
6. Maximum working water pressure is 287 psig.
7. Calculated from Δt = Total Heat of Rejection/(Nominal flow rate x 500).
8. Requires ARCNB21 connecting branch pipes to connect components.
9. Requires ARCNB21 and ARCNB31 connecting branch pipes to connect components.

Due to our policy of continuous product innovation, some specifications may change without notification.
©LG Electronics U.S.A., Inc., Englewood Cliffs, NJ. All rights reserved. “LG” is a registered trademark of LG Corp.

GENERAL DATA

Water Source Unit—Heat Recovery

Table 3a: General Data—Heat Recovery—ARWB096DA2, ARWB192DA2, ARWB290DA2

	8 Ton	16 Ton	24 Ton[8]
Combination Unit Model Number			ARWB290DA2
Individual Component Model Number	ARWB096DA2	ARWB192DA2	ARWB192DA2 +ARWB096DA2
Cooling Mode Performance			
Nominal Capacity (Btu/h)[2]	95,900	191,100	286,600
Rated Capacity[1]	92,000	184,000	280,000
Heating Mode Performance			
Nominal Heating Capacity (Btu/h)[2]	107,500	225,000	322,500
Rated Capacity[1]	103,000	206,000	310,000
Compressor			
Type	DC Inverter Scroll	DC Inverter Scroll + Constant	(DC Inverter Scroll) x 2 + Constant
Power Supply (V/Hz/Ø)[3]	460/60/3	460/60/3	460/60/3
MCA (A)	13	26.2	26.2 + 13
MOP (A)	20	35	35 + 20
Maximum Starting Current (A)	—	92.8	92.8
Unit Data			
Sound Pressure (dB(A))[4]	51	51	53
Heat Rejected to Equipment Room (Btu/h)	1707	1707	1707 + 1707
Net Weight (lbs)	375	525	525 + 375
Shipping Weight (lbs)	405	556	556 + 405
(W x H x D)	30-7/16 x 44-1/8 x 21-9/16	30-7/16 x 44-1/8 x 21-9/16	(30-7/16 x 44-1/8 x 21-9/16) x 2
Maximum Quantity Indoor Units	16	32	49
Refrigerant Charge R410A	16.1	19.4	19.4 + 16.1
Refrigerant Connection[5]			
Vapor Line High OD (in)	3/4 Braze	7/8 Braze	7/8 Braze + 3/4 Braze
Vapor Line Low OD (in)	7/8 Braze	1-1/8 Braze	1-1/8 Braze + 7/8 Braze
Liquid Line OD (in)	3/8 Flare	1/2 Flare	1/2 Flare + 3/8 Flare

1. Rated capacity = AHRI Standard 1230. Ratings are based on non-ducted indoor units. Refer to the AHRI web site at www.ahridirectory.org for information.
2. Nominal capacity is outside of AHRI Standard 1230.
3. The voltage tolerance is ±10%.
4. Sound pressure levels as tested in anechoic chamber under ISO Standard 1996.
5. Refer to “Refrigerant Pipe Design” starting on page 204 for correct line sizing. The contractor must use LG manufactured Y-Branch fittings only. The designer must verify refrigerant piping design configuration using LATS MultiV software to layout and design the refrigerant piping system.
6. Maximum working water pressure is 287 psig.
7. Calculated from Δt = Total Heat of Rejection/(Nominal flow rate x 500).
8. Requires ARCNB21 connecting branch pipes to connect components.

Due to our policy of continuous product innovation, some specifications may change without notification.
©LG Electronics U.S.A., Inc., Englewood Cliffs, NJ. All rights reserved. “LG” is a registered trademark of LG Corp.

Table 3b: General Data—Heat Recovery—ARWB096DA2, ARWB192DA2, ARWB290DA2

	8 Ton	16 Ton	24 Ton[8]
Combination Unit Model Number			ARWB290DA2
Individual Component Model Number	ARWB096DA2	ARWB192DA2	ARWB192DA2 +ARWB096DA2
Water Heat Exchanger[6] (Stainless steel plate for all three models)			
Water Inlet/Outlet Connection Size (in)	1-1/4 FPT	1-1/2 FPT	1-1/2 FPT + 1-1/4 FPT
Condensate Drain (in)	3/4	3/4	3/4 + 3/4
Nominal Flow Rate (GPM) Total = a + b	25.4	50.8	76.2 (50.8 + 25.4)
Range of Flow (GPM)	13.2–31.7	26.4–63.4	39.6–95.1
Cooling Entering Water Temperature Range (°F)	50–113	50–113	50–113
Heating Entering Water Temperature Range (°F)	23–113	23–113	23–113
Total Heat of Rejection (Btu/h)	114,667	229,354	344,030
Total Heat of Absorption	87,693	185,045	262,738
Δt (°F)[7]	8.2	8.2	8.2

1. Rated capacity = AHRI Standard 1230. Ratings are based on non-ducted indoor units. Refer to the AHRI web site at www.ahridirectory.org for information.
2. Nominal capacity is outside of AHRI Standard 1230.
3. The voltage tolerance is ±10%.
4. Sound pressure levels as tested in anechoic chamber under ISO Standard 1996.
5. Refer to "Refrigerant Pipe Design" starting on page 204 for correct line sizing. The contractor must use LG manufactured Y-Branch fittings only. The designer must verify refrigerant piping design configuration using LATS MultiV software to layout and design the refrigerant piping system.
6. Maximum working water pressure is 287 psig.
7. Calculated from Δt = Total Heat of Rejection/(Nominal flow rate x 500).
8. Requires ARCNB21 connecting branch pipes to connect components.

Due to our policy of continuous product innovation, some specifications may change without notification.
©LG Electronics U.S.A., Inc., Englewood Cliffs, NJ. All rights reserved. "LG" is a registered trademark of LG Corp.

GENERAL DATA

Water Source Unit—Heat Recovery

Table 4a: General Data—Heat Recovery—ARWB390DA2, ARWB480DA2, ARWB580DA2

	32 Ton	40 Ton	48 Ton
Combination Unit Model Number	ARWB390DA2[8]	ARWB480DA2[9]	ARWB580DA2[9]
Individual Component Model Number	(ARWB192DA2) x 2	(ARWB192DA2) x 2 + AR-WB096DA2	(ARWB192DA2) x 3
Cooling Mode Performance			
Nominal Capacity (Btu/h)[2]	382,200	477,800	573,400
Rated Capacity[1]	N/A	N/A	N/A
Heating Mode Performance			
Nominal Capacity (Btu/h)[2]	429,900	537,500	645,000
Rated Capacity[1]	N/A	N/A	N/A
Compressor			
Type	(DC Inverter Scroll) x 2 + (Constant) x 2	(DC Inverter Scroll) x 3 + (Constant) x 2	(DC Inverter Scroll) x 3 + (Constant) x 3
Power Supply (V/Hz/Ø)[3]	460/60/3	460/60/3	460/60/3
MCA (A)	26.2 + 26.2	26.2 + 26.2 + 13	26.2 + 26.2 + 26.2
MOP (A)	35 + 35	35 + 35 + 20	35 + 35 + 35
Max Starting Current (A)	92.8 + 92.8	92.8 + 92.8	92.8 + 92.8 + 92.8
Unit Data			
Sound Pressure (dB(A))[4]	54	55	56
Heat Rejected to Equipment Room (Btu/h)	1707 + 1707	1707 + 1707 + 1707	1707 + 1707 + 1707
Net Weight (lbs)	525 + 525	525 + 525 + 375	525 + 525 + 525
Shipping Weight (lbs)	556 + 556	556 + 556 + 405	556 + 556 + 556
W x H x D (in)	(30-7/16 x 44-1/8 x 21-9/16) x 2	(30-7/16 x 44-1/8 x 21-9/16) x 3	(30-7/16 x 44-1/8 x 21-9/16) x 3
Maximum Quantity Indoor Units	64	64	64
Refrigerant Charge R410A	19.4 + 19.4	19.4 + 19.4 + 16.1	19.4 + 19.4 + 19.4
Refrigerant Connection[5]			
Vapor Line High OD (in)	7/8 Braze + 7/8 Braze	7/8 Braze + 7/8 Braze + 3/4 Braze	7/8 Braze + 7/8 Braze + 7/8 Braze
Vapor Line Low OD (in)	1-1/8 Braze + 1-1/8 Braze	1-1/8 Braze+1-1/8 Braze + 7/8 Braze	1-1/8 Braze + 1-1/8 Braze + 1-1/8 Braze
Liquid Line OD (in)	1/2 Flare + 1/2 Flare	1/2 Flare +1/2 Flare + 3/8 Flare	1/2 Flare + 1/2 Flare + 1/2 Flare

1. Rated capacity = AHRI Standard 1230. Ratings are based on non-ducted indoor units. Refer to the AHRI web site at www.ahridirectory.org for information.
2. Nominal capacity is outside of AHRI Standard 1230 and based on the following conditions:
   - Cooling—Indoor 80°F DB/66°F WB
     Water Temperature Entering 86°F
   - Heating—Indoor 68°F DB
     Water Temperature Entering 68°F
3. The voltage tolerance is ±10%.
4. Sound pressure levels as tested in anechoic chamber under ISO Standard 1996.
5. Refer to "Refrigerant Pipe Design" starting on page 204 for correct line sizing. The contractor must use LG manufactured Y-Branch fittings only. The designer must verify refrigerant piping design configuration using LATS MultiV software to layout and design the refrigerant piping system.
6. Maximum working water pressure is 287 psig.
7. Calculated from Δt = Total Heat of Rejection/(Nominal flow rate x 500).
8. Requires ARCNB21 connecting branch pipes to connect components.
9. Requires ARCNB21 and ARCNB31 connecting branch pipes to connect components.

Due to our policy of continuous product innovation, some specifications may change without notification.
©LG Electronics U.S.A., Inc., Englewood Cliffs, NJ. All rights reserved. "LG" is a registered trademark of LG Corp.

Table 4b: General Data—Heat Recovery—ARWB390DA2, ARWB480DA2, ARWB580DA2

	32 Ton	40 Ton	48 Ton
Combination Unit Model Number	ARWB390DA2[8]	ARWB480DA2[9]	ARWB580DA2[9]
Individual Component Model Number	(ARWB192DA2) x 2	(ARWB192DA2) x 2 + ARWB-096DA2	(ARWB192DA2) x 3
Water Heat Exchanger[6] (Stainless Steel Plate for all three models)			
Water Inlet/ Outlet Connection Size (in)	1-1/2 FPT + 1-1/2 FPT	1-1/2 FPT + 1-1/2 FPT + 1-1/4 FPT	1-1/2 FPT + 1-1/2 FPT + 1-1/2 FPT
Condensate Drain (in)	3/4 + 3/4	3/4 + 3/4 + 3/4	3/4 + 3/4 + 3/4
Nominal Flow Rate (GPM) Total = a + b + c	101.6 (50.8 + 50.8)	127 (50.8 + 50.8 + 25.4)	152.4 (50.8 + 50.8 + 50.8)
Range of Flow (GPM)	52.8–126.8	66–158.5	79.2–190.2
Cooling Entering Water Temperature Range (°F)	50–113	50–113	50–113
Heating Entering Water Temperature Range (°F)	23–113	23–113	23–113
Total Heat of Rejection (Btu/h)	458,707	573,384	688,061
Total Heat of Absorption (Btu/h)	349,989	437,782	525,475
Pressure Drop (ft)	14.4 + 14.4	14.4 + 14.4 + 8.9	14.4 + 14.4 + 14.4
Δt (°F)[7]	9.0	9.0	9.0

1. Rated capacity = AHRI Standard 1230. Ratings are based on non-ducted indoor units. Refer to the AHRI web site at www.ahridirectory.org for information.
2. Nominal capacity is outside of AHRI Standard 1230 and based on the following conditions:
   - Cooling—Indoor 80°F DB/66°F WB
     Water Temperature Entering 86°F
   - Heating—Indoor 68°F DB
     Water Temperature Entering 68°F
3. The voltage tolerance is ±10%.
4. Sound pressure levels as tested in anechoic chamber under ISO Standard 1996.
5. Refer to "Refrigerant Pipe Design" starting on page 204 for correct line sizing. The contractor must use LG manufactured Y-Branch fittings only. The designer must verify refrigerant piping design configuration using LATS MultiV software to layout and design the refrigerant piping system.
6. Maximum working water pressure is 287 psig.
7. Calculated from Δt = Total Heat of Rejection/(Nominal flow rate x 500).
8. Requires ARCNB21 connecting branch pipes to connect components.
9. Requires ARCNB21 and ARCNB31 connecting branch pipes to connect components.

Due to our policy of continuous product innovation, some specifications may change without notification.
©LG Electronics U.S.A., Inc., Englewood Cliffs, NJ. All rights reserved. "LG" is a registered trademark of LG Corp.

GENERAL DATA

Water Source Unit—Heat Recovery

Table 5: General Data—Heat Recovery Unit (HR)—PRHR021A, PRHR031A, PRHR041A

Model	PRHR021A	PRHR031A	PRHR041A
Maximum Number Indoor Units	2	3	4
Nominal Output per Port[1]			
Cooling/Heating (Btu/h)	48,100	48,100	48,100
Net Weight (lbs)	39.7	44.1	48.5
Dimensions W x H x D (in)	31.5 x 8.6 x 24.3	31.5 x 8.6 x 24.2	31.5 x 8.6 x 24.3
Casing	Galvenized Steel	Galvenized Steel	Galvenized Steel
Connecting Pipes (2 pipe side to Indoor Unit (in))			
Liquid Pipe	3/8	3/8	3/8
Vapor Pipe	5/8	5/8	5/8
3 pipe side to Water Source Unit or series HR unit (in)			
Liquid Pipe	3/8	1/2	5/8
Vapor line low	7/8	1-1/8	1-1/8
Vapor line high	3/4	7/8	7/8
Insulation Material[2]	Polyetinylene	Polyetinylene	Polyetinylene

1. Total capacity of HR unit and any series connected HR unit is 160,000 Btu/h.
2. Condensate drain is not required since units are internally insulated.
3. Unit to be installed in level upright position only.
4. HR units connected in series must be at the same elevation.
5. Elevation difference between HR unit and indoor unit is a maximum of 16 feet.

Due to our policy of continuous product innovation, some specifications may change without notification.
©LG Electronics U.S.A., Inc., Englewood Cliffs, NJ. All rights reserved. "LG" is a registered trademark of LG Corp.



MULTI V™ WATER II

Heat Pump

Due to our policy of continuous product innovation, some specifications may change without notification.
©LG Electronics U.S.A., Inc., Englewood Cliffs, NJ. All rights reserved. "LG" is a registered trademark of LG Corp.

GENERAL DATA

Water Source Unit—Heat Pump

Table 6a: General Data—Heat Pump—ARWN072BA2, ARWN144BA2, ARWN216BA2

	6 Ton	12 Ton	18 Ton
Combination Unit Model Number			ARWN216BA2[8]
Individual Component Model Number	ARWN072BA2	ARWN144BA2	(ARWN144BA2 + ARWN072BA2)
Cooling Mode Performance			
Nominal Capacity (Btu/h)[2]	72,000	144,000	216,000
Nominal Input Power (kW)	4.4	8.8	13.2
Rated Capacity[1]	69,000	138,000	206,000
Heating Mode Performance			
Nominal Capacity (Btu/h)[2]	81,000	162,000	243,000
Nominal Input Power (kW)	4.55	9.14	13.69
Rated Capacity[1]	77,000	154,000	232,000
Compressor			
Type	DC Inverter Scroll	DC Inverter Scroll + Constant Scroll	(DC Inverter Scroll) x 2 + Constant Scroll
Power Supply (V/Hz/Ø)[3]	208–230/60/3	208–230/60/3	208–230/60/3
MCA (A)	21	42.5	42.5 + 21
MOP (A)	35	60	60 + 35
Max Starting Current (A)	—	103.9	103.9
Unit Data			
Sound Pressure (dB(A))[4]	49	50	51
Heat Rejected to Equipment Room (Btu/h)	1707	1707	1707 + 1707
Net Weight (lbs)	375	525	525 + 375
Shipping Weight (lbs)	405	556	556 + 405
W x H x D (in)	30-7/16 x 44-1/8 x 21-9/16	30-7/16 x 44-1/8 x 21-9/16	(30-7/16 x 44-1/8 x 21-9/16) + (30-7/16 x 44-1/8 x 21-9/16)
Max Quantity Indoor Units	16	32	49
Refrigerant Charge R410A (lbs)	16.1	19.4	19.4 + 16.1
Refrigerant Connection[5]			
Vapor Line OD (in)	7/8 Braze	1-1/8 Braze	1-1/8 Braze + 7/8Braze
Liquid Line OD (in)	3/8 Flare	1/2 Flare	1/2 Flare + 3/8 Flare

1. Rated capacity = AHRI Standard 1230. Ratings are based on non-ducted indoor units. Refer to the AHRI web site at www.ahridirectory.org for information.
2. Nominal capacity is outside of AHRI Standard 1230.
3. The voltage tolerance is ±10%.
4. Sound pressure levels as tested in anechoic chamber under ISO Standard 1996.
5. Refer to "Refrigerant Pipe Design" starting on page 204 for correct line sizing. The contractor must use LG manufactured Y-Branch fittings only. The designer must verify refrigerant piping design configuration using LATS MultiV software to layout and design the refrigerant piping system.
6. Maximum working water pressure is 287 psig.
7. Calculated from Δt = Total Heat of Rejection/(Nominal flow rate x 500).
8. Requires ARCNB21 connecting branch pipes to connect components.

Due to our policy of continuous product innovation, some specifications may change without notification.
©LG Electronics U.S.A., Inc., Englewood Cliffs, NJ. All rights reserved. "LG" is a registered trademark of LG Corp.

Table 6b: General Data——Heat Pump—ARWN072BA2, ARWN144BA2, ARWN216BA2

	6 Ton	12 Ton	18 Ton
Combination Unit Model Number			ARWN216BA2[8]
Individual Component Model Number	ARWN072BA2	ARWN144BA2	(ARWN144BA2 + ARWN-072BA2)
Water Heat Exchanger[6] (Stainless Steel Plate)			
Water Inlet / Outlet Connection Size (in)	1-1/4 FPT	1-1/2 FPT	1-1/2 FPT+1-1/4FPT
Condensate Drain (in)	3/4	3/4	3/4 + 3/4
Nominal Flow Rate (GPM) Total = a + b	21.1	42.2	63.3 (42.2 + 21.1)
Range of Flow (GPM)	10.6–26.4	21.2–52.8	31.8–79.2
Cooling entering water temperature range (°F)	50–113	50–113	50–113
Heating entering water temperature range (°F)	23–113	23–113	23–113
Total Heat of Rejection (Btu/h)	87,032	174,063	261,095
Total Heat of Absorption (Btu/h)	65,974	130,787	196,249
Pressure Drop (ft-wg)	8.9	14.4	14.4 + 8.9
Δt (°F)[7]	8.2	8.2	8.2

1. Rated capacity = AHRI Standard 1230. Ratings are based on non-ducted indoor units. Refer to the AHRI web site at www.ahridirectory.org for information.
2. Nominal capacity is outside of AHRI Standard 1230.
3. The voltage tolerance is ±10%.
4. Sound pressure levels as tested in anechoic chamber under ISO Standard 1996.
5. Refer to “Refrigerant Pipe Design” starting on page 204 for correct line sizing. The contractor must use LG manufactured Y-Branch fittings only. The designer must verify refrigerant piping design configuration using LATS MultiV software to layout and design the refrigerant piping system.
6. Maximum working water pressure is 287 psig.
7. Calculated from Δt = Total Heat of Rejection/(Nominal flow rate x 500).
8. Requires ARCNB21 connecting branch pipes to connect components.

Due to our policy of continuous product innovation, some specifications may change without notification.
©LG Electronics U.S.A., Inc., Englewood Cliffs, NJ. All rights reserved. “LG” is a registered trademark of LG Corp.

GENERAL DATA

Water Source Unit—Heat Pump

Table 7a: General Data—Heat Pump—ARWN288BA2, ARWN360BA2, ARWN432BA2

	24 Ton	30 Ton	36 Ton
Combination Unit Model Number	ARWN288BA2[8]	ARWN360BA2[9]	ARWn432BA2[9]
Individual Component Model Number	(ARWN144BA2) x 2	(ARWN144BA2) x 2 + ARWN-072BA2	(ARWN144BA2) x 3
Cooling Mode Performance			
Nominal Capacity (Btu/h)[2]	288,000	360,000	432,000
Nominal Input Power (kW)	17.6	22.0	26.4
Rated Capacity[1]	274,000	N/A	N/A
Heating Mode Performance			
Nominal Capacity (Btu/h)[2]	324,000	405,000	486,000
Nominal Input Power (kW)	18.28	22.83	27.36
Rated Capacity[1]	308,000	N/A	N/A
Compressor			
Type	(DC Inverter Scroll) x 2 + (Constant) x 2	(DC Inverter Scroll) x 3 + (Constant) x 2	(DC Inverter Scroll) x 3 + (Constant) x 3
Power Supply (V/Hz/Ø)[3]	208–230/60/3	208–230/60/3	208–230/60/3
MCA (A)	42.5 + 42.5	42.5 + 42.5 + 21	42.5 + 42.5 + 42.5
MOP (A)	60 + 60	60 + 60 + 35	60 + 60 + 60
Max Starting Current (A)	103.9 + 103.9	103.9 + 103.9	103.9 + 103.9 + 103.9
Unit Data			
Sound Pressure (dB(A))[4]	52	53	54
Heat rejected to equipment room (Btu/h)	1707 + 1707	1707 + 1707 + 1707	1707 + 1707 + 1707
Net Weight (lbs)	525 + 525	525 + 525 + 375	525 + 525 + 525
Shipping Weight (lbs)	556 + 556	556 + 556 + 405	556 + 556 + 556
W x H x D (in)	(30-7/16 x 44-1/8 x 21-9/16) x 2	(30-7/16 x 44-1/8 x 21-9/16) x 3	(30-7/16 x 44-1/8 x 21-9/16) x 3
Max Quantity Indoor Units	64	64	64
Refrigerant Charge R410A (lbs)	19.4 + 19.4	19.4 + 19.4 + 16.1	19.4 + 19.4 + 19.4
Refrigerant Connection[5]			
Vapor Line OD (in)	1-1/8 Braze + 1-1/8 Braze	1-1/8 Braze + 1-1/8 Braze + 7/8 Braze	1-1/8 Braze + 1-1/8 Braze + 1-1/8 Braze
Liquid Line OD (in)	1/2 Flare + 1/2 Flare	1/2 Flare + 1/2 Flare + 3/8 Flare	1/2 Flare + 1/2 Flare + 1/2 Flare

1. Rated capacity = AHRI Standard 1230. Ratings are based on non-ducted indoor units. Refer to the AHRI web site at www.ahridirectory.org for information.
2. Nominal capacity is outside of AHRI Standard 1230.
3. The voltage tolerance is ±10%.
4. Sound pressure levels as tested in anechoic chamber under ISO Standard 1996.
5. Refer to the "Refrigerant Pipe Design" starting on page 204 for correct line sizing. The contractor must use LG manufactured Y-Branch fittings only. The designer must verify refrigerant piping design configuration using LATS MultiV software to layout and design the refrigerant piping system.
6. Maximum working water pressure is 287 psig.
7. Calculated from Δt = Total Heat of Rejection/(Nominal flow rate x 500).
8. Requires ARCNN21 connecting branch pipes to connect components.
9. Requires ARCNN21 and ARCNN31 connecting branch pipes to connect components.
10. EER, IEER, and COP ratings are based on non-ducted indoor units, and these values are subject to change without notice. Refer to the AHRI web site at www.ahridirectory.org for the latest values.

Due to our policy of continuous product innovation, some specifications may change without notification.
©LG Electronics U.S.A., Inc., Englewood Cliffs, NJ. All rights reserved. "LG" is a registered trademark of LG Corp.

Table 7b: General Data—Heat Pump—ARWN288BA2, ARWN360BA2, ARWN432BA2

	24 Ton	30 Ton	36 Ton
Combination Unit Model Number	ARWN288BA2[8]	ARWN360BA2[9]	ARWN432BA2[9]
Individual Component Model Number	(ARWN144BA2) x 2	(ARWN144BA2) x 2 + ARWN072BA2	(ARWN144BA2) x 3
WATER HEAT EXCHANGER[6] (Stainless Steel Plate)			
Water Inlet / Outlet Connection Size (in)	1-1/2 FPT + 1-1/2 FPT	1-1/2 FPT + 1-1/2 FPT + 1-1/4FPT	1-1/2 FPT + 1-1/2 FPT + 1-1/2FPT
Condensate Drain (in)	3/4 + 3/4	3/4 + 3/4 + 3/4	3/4 + 3/4 + 3/4
Nominal Flow Rate (GPM) Total = a + b + c	84.4 (42.2 + 42.2)	105.5 (42.2 + 42.2 + 21.1)	126.6 (42.2 + 42.2 + 42.2)
Range of Flow (GPM)	42.4–105.6	63.6–158.4	79.2–190.2
Cooling entering water temperature range (°F)	50–113	50–113	50–113
Heating entering water temperature range (°F)	23–113	23–113	23–113
Total Heat of Rejection (Btu/h)	348,126	435,158	522,189
Total Heat of Absorption	261,574	327,036	392,497
Pressure Drop (ft)	14.4 + 14.4	14.4 + 14.4+8.9	14.4 + 14.4 + 14.4
Δt (°F)[7]	8.2	8.2	8.2

1. Rated capacity = AHRI Standard 1230. Ratings are based on non-ducted indoor units. Refer to the AHRI web site at www.ahridirectory.org for information.
2. Nominal capacity is outside of AHRI Standard 1230.
3. The voltage tolerance is ±10%.
4. Sound pressure levels as tested in anechoic chamber under ISO Standard 1996.
5. Refer to the "Refrigerant Pipe Design" starting on page 204 for correct line sizing. The contractor must use LG manufactured Y-Branch fittings only. The designer must verify refrigerant piping design configuration using LATS MultiV software to layout and design the refrigerant piping system.
6. Maximum working water pressure is 287 psig.
7. Calculated from Δt = Total Heat of Rejection/(Nominal flow rate x 500).
8. Requires ARCNN21 connecting branch pipes to connect components.
9. Requires ARCNN21 and ARCNN31 connecting branch pipes to connect components.

Due to our policy of continuous product innovation, some specifications may change without notification.
©LG Electronics U.S.A., Inc., Englewood Cliffs, NJ. All rights reserved. "LG" is a registered trademark of LG Corp.

GENERAL DATA

Water Source Unit—Heat Pump

Table 8a: General Data—Heat Pump—ARWN096DA2, ARWN192DA2, ARWN290DA2

	8 Ton	16 Ton	24 Ton[8]
Combination Unit Model Number			ARWN290DA2
Individual Component Model Number	ARWN096DA2	ARWN192DA2	ARWN192DA2 + ARWN096DA2
Cooling Mode Performance			
Nominal Capacity (Btu/h)[2]	95,900	191,100	286,600
Nominal Input Power (kW)	5.6	11.2	16.8
Rated Capacity[1]	92,000	184,000	280,000
Heating			
Nominal Heating Capacity (Btu/h)[2]	107,500	225,000	322,500
Nominal Unit Input Power (kW)	5.8	11.7	17.5
Rated Capacity[1]	103,000	206,000	310,000
Compressor			
Type	DC Inverter Scroll	DC Inverter Scroll + Constant	(DC Inverter Scroll) x 2 + Constant
Power Supply (V/Hz/Ø)[3]	460/60/3	460/60/3	460/60/3
MCA (A)	13	26.2	26.2 + 13
MOP (A)	20	35	35 + 20
Max Starting Current (A)	—	92.8	92.8
Unit Data			
Sound Pressure (DB(A))[4]	51	51	53
Heat Rejected to Equipment Room (Btu/h)	1707	1707	1707 + 1707
Net Weight (lbs)	375	525	525 + 375
Shipping Weight (lbs)	405	556	556 + 405
(W x H x D)	30-7/16 x 44-1/8 x 21-9/16	30-7/16 x 44-1/8 x 21-9/16	(30-7/16 x 44-1/8 x 21-9/16) x 2
Max Quantity Indoor Units	16	32	49
Refrigerant Charge R410A (lbs)	16.1	19.4	19.4 + 16.1
Refrigerant Connection[5]			
Vapor Line OD (in)	7/8 Braze	1-1/8 Braze	1-1/8 Braze + 7/8 Braze
Liquid Line OD (in)	3/8 Flare	1/2 Flare	1/2 Flare + 3/8 Flare

1. Rated capacity = AHRI Standard 1230. Ratings are based on non-ducted indoor units. Refer to the AHRI web site at www.ahridirectory.org for information.
2. Nominal capacity is outside of AHRI Standard 1230.
3. The voltage tolerance is ±10%.
4. Sound pressure levels as tested in anechoic chamber under ISO Standard 1996.
5. Refer to the "Refrigerant Pipe Design" starting on page 204 for correct line sizing. The contractor must use LG manufactured Y-Branch fittings only. The designer must verify refrigerant piping design configuration using LATS MultiV software to layout and design the refrigerant piping system.
6. Maximum working water pressure is 287 psig.
7. Calculated from Δt = Total Heat of Rejection/(Nominal flow rate x 500).
8. Requires ARCNN21 connecting branch pipes to connect components.
9. Requires ARCNN21 and ARCNN31 connecting branch pipes to connect components.

Due to our policy of continuous product innovation, some specifications may change without notification.
©LG Electronics U.S.A., Inc., Englewood Cliffs, NJ. All rights reserved. "LG" is a registered trademark of LG Corp.

Table 8b: General Data—Heat Pump—ARWN096DA2, ARWN192DA2, ARWN290DA2

	8 Ton	16 Ton	24 Ton[8]
Combination Unit Model Number			ARWN290DA2
Individual Component Model Number	ARWN096DA2	ARWN192DA2	ARWN192DA2 +ARWN096DA2
Water Heat Exchanger[6] (Stainless Steel Plate for all three models)			
Water Inlet / Outlet Connection Size (in)	1-1/4 FPT	1-1/2 FPT	1-1/2 FPT + 1-1/4 FPT
Condensate Drain (in)	3/4	3/4	3/4 + 3/4
Nominal Flow Rate (GPM) Total = a + b	25.4	50.8	76.2 (50.8 + 25.4)
Range of Flow (GPM)	13.2–31.7	26.4–63.4	39.6–95.1
Cooling entering water temperature range (°F)	50–113	50–113	50–113
Heating entering water temperature range (°F)	23–113	23–113	23–113
Total Heat of Rejection (Btu/h)	114,667	229,354	344,030
Total Heat of Absorption	87,693	185,045	262,738
Δt (°F)[7]	8.2	8.2	8.2

1. Rated capacity = AHRI Standard 1230. Ratings are based on non-ducted indoor units. Refer to the AHRI web site at www.ahridirectory.org for information.
2. Nominal capacity is outside of AHRI Standard 1230.
3. The voltage tolerance is ±10%.
4. Sound pressure levels as tested in anechoic chamber under ISO Standard 1996.
5. Refer to the “Refrigerant Pipe Design” starting on page 204 for correct line sizing. The contractor must use LG manufactured Y-Branch fittings only. The designer must verify refrigerant piping design configuration using LATS MultiV software to layout and design the refrigerant piping system.
6. Maximum working water pressure is 287 psig.
7. Calculated from Δt = Total Heat of Rejection/(Nominal flow rate x 500).
8. Requires ARCNN21 connecting branch pipes to connect components.
9. Requires ARCNN21 and ARCNN31 connecting branch pipes to connect components.

Due to our policy of continuous product innovation, some specifications may change without notification.
©LG Electronics U.S.A., Inc., Englewood Cliffs, NJ. All rights reserved. “LG” is a registered trademark of LG Corp.

GENERAL DATA

Water Source Unit—Heat Pump

Table 9a: General Data—Heat Pump—ARWN390DA2, ARWN480DA2, ARWN580DA2

	32 Ton	40 Ton	48 Ton
Combination Unit Model Number	ARWN390DA2[8]	ARWN480DA2[9]	ARWN580DA2[9]
Individual Component Model Number	(ARWN192DA2) x 2	(ARWN192DA2) x 2 + ARWN-096DA2	(ARWN192DA2) x 3
Cooling Mode Performance			
Nominal Capacity (Btu/h)[2]	382,200	477,800	573,400
Nominal Input Power (kW)	22.4	28.0	33.6
Rated Capacity[1]	N/A	N/A	N/A
Heating Mode Performance			
Nominal Capacity (Btu/h)[2]	429,900	537,500	645,000
Nominal Input Power (kW)	23.4	29.2	35.0
Rated Capacity[1]	N/A	N/A	N/A
Compressor			
Type	(DC Inverter Scroll) x 2 + (Constant) x 2	(DC Inverter Scroll) x 3 + (Constant) x 2	(DC Inverter Scroll) x 3 + (Constant) x 3
Power Supply (V/Hz/Ø)[3]	460/60/3	460/60/3	460/60/3
MCA (A)	26.2 + 26.2	26.2 + 26.2 + 13	26.2 + 26.2 + 26.2
MOP (A)	35 + 35	35 + 35 + 20	35 + 35 + 35
Max Starting Current (A)	92.8 + 92.8	92.8 + 92.8	92.8 + 92.8 + 92.8
Unit Data			
Sound Pressure (DB(A))[4]	54	55	56
Heat Rejected to Equipment Room (Btu/h)	1707 + 1707	1707 + 1707 + 1707	1707 + 1707 + 1707
Net Weight (lbs)	525 + 525	525 + 525 + 375	525 + 525 + 525
Shipping Weight (lbs)	556 + 556	556 + 556 + 405	556 + 556 + 556
W x H x D (in)	(30-7/16 x 44-1/8 x 21-9/16) x 2	(30-7/16 x 44-1/8 x 21-9/16) x 3	(30-7/16 x 44-1/8 x 21-9/16) x 3
Maximum Quantity Indoor Units	64	64	64
Refrigerant Charge R410A (lbs)	19.4 + 19.4	19.4 + 19.4 + 16.1	19.4 + 19.4 + 19.4
Refrigerant Connection[5]			
Vapor Line OD (in)	1-1/8 Braze + 1-1/8 Braze	1-1/8 Braze+1-1/8 Braze + 7/8 Braze	1-1/8 Braze + 1-1/8Braze + 1-1/8 Braze
Liquid Line OD (in)	1/2 Flare + 1/2 Flare	1/2 Flare +1/2 Flare + 3/8 Flare	1/2 Flare + 1/2 Flare + 1/2 Flare

1. Rated capacity = AHRI Standard 1230. Ratings are based on non-ducted indoor units. Refer to the AHRI web site at www.ahridirectory.org for information.
2. Nominal capacity is outside of AHRI Standard 1230.
3. The voltage tolerance is ±10%.
4. Sound pressure levels as tested in anechoic chamber under ISO Standard 1996.
5. Refer to "Refrigerant Pipe Design" starting on page 204 for correct line sizing. The contractor must use LG manufactured Y-Branch fittings only. The designer must verify refrigerant piping design configuration using LATS MultiV software to layout and design the refrigerant piping system.
6. Maximum working water pressure is 287 psig.
7. Calculated from Δt = Total Heat of Rejection/(Nominal flowrate x 500).
8. Requires ARCNN21 connecting branch pipes to connect components.
9. Requires ARCNN21 and ARCNN31 connecting branch pipes to connect components.

Due to our policy of continuous product innovation, some specifications may change without notification.
©LG Electronics U.S.A., Inc., Englewood Cliffs, NJ. All rights reserved. "LG" is a registered trademark of LG Corp.

Table 9b: General Data—Heat Pump—ARWN390DA2, ARWN480DA2, ARWN580DA2

	32 Ton	40 Ton	48 Ton
Combination Unit Model Number	ARWB390DA2[8]	ARWB480DA2[9]	ARWB580DA2[9]
Individual Component Model Number	(ARWB192DA2) x 2	(ARWB192DA2) x 2 + AR-WB096DA2	(ARWB192DA2) x 3
Water Heat Exchanger[6] (Stainless Steel Plate for all three models)			
Water Inlet / Outlet Connection Size (in)	1-1/2 FPT + 1-1/2 FPT	1-1/2 FPT + 1-1/2 FPT + 1-1/4 FPT	1-1/2 FPT + 1-1/2 FPT + 1-1/2 FPT
Condensate Drain (in)	3/4 + 3/4	3/4 + 3/4 + 3/4	3/4 + 3/4 + 3/4
Nominal Flow Rate (GPM) Total = a + b + c	101.6 (50.8 + 50.8)	127 (50.8 + 50.8 + 25.4)	152.4 (50.8 + 50.8 + 50.8)
Range of Flow (GPM)	52.8–126.8	66–158.5	79.2–190.2
Cooling entering water temperature range (°F)	50–113	50–113	50–113
Heating entering water temperature range (°F)	23–113	23–113	23–113
Total Heat of Rejection (Btu/h)	458,707	573,384	688,061
Total Heat of Absorption (Btu/h)	349,989	437,782	525,475
Pressure Drop (ft)	14.4 + 14.4	14.4 + 14.4 + 8.9	14.4 + 14.4 + 14.4
Δt (°F)[7]	9.0	9.0	9.0

1. Rated capacity = AHRI Standard 1230. Ratings are based on non-ducted indoor units. Refer to the AHRI web site at www.ahridirectory.org for information.
2. Nominal capacity is outside of AHRI Standard 1230.
3. The voltage tolerance is ±10%.
4. Sound pressure levels as tested in anechoic chamber under ISO Standard 1996.
5. Refer to "Refrigerant Pipe Design" starting on page 204 for correct line sizing. The contractor must use LG manufactured Y-Branch fittings only. The designer must verify refrigerant piping design configuration using LATS MultiV software to layout and design the refrigerant piping system.
6. Maximum working water pressure is 287 psig.
7. Calculated from Δt = Total Heat of Rejection/(Nominal flowrate x 500).
8. Requires ARCNN21 connecting branch pipes to connect components.
9. Requires ARCNN21 and ARCNN31 connecting branch pipes to connect components.

Due to our policy of continuous product innovation, some specifications may change without notification.
©LG Electronics U.S.A., Inc., Englewood Cliffs, NJ. All rights reserved. "LG" is a registered trademark of LG Corp.

GENERAL DATA

Indoor Units

Table 10a: Summary Data—Wall-Mounted / Ceiling Cassette Indoor Units.

Unit / Type[1]	ARNU*****[2]	Nominal Capacity Btu/h	
		Cooling[3]	Heating[3]
Wall Mounted–ART COOL™ Mirror 	073 SER2	7,500	8,500
	093 SER2	9,600	10,900
	123 SER2	12,300	13,600
	153 SER2	15,400	17,100
	183 S8R2	19,100	21,500
	243 S8R2	24,200	27,300
Wall Mounted–Standard Finish 	073 SEL2	7,500	8,500
	093 SEL2	9,600	10,900
	123 SEL2	12,300	13,600
	153 SEL2	15,400	17,100
	183 S5L2	19,100	21,500
	243 S5L2	24,200	27,300
Ceiling Cassette–1 Way 	073 TJC2	7,500	8,500
	093 TJC2	9,600	10,900
	123 TJC2	12,300	13,600
Ceiling Cassette–2 Way 	183 TLC2	19,100	21,500
	243 TLC2	24,200	27,300
Ceiling Cassette–4 Way (2' x 2') 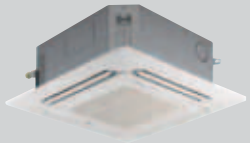	053 TRC2	5,500	6,100
	073 TRC2	7,500	8,500
	093 TRC2	9,600	10,900
	123 TRC2	12,300	13,600
	153 TQC2	15,400	17,100
	183 TQC2	19,100	21,500
Ceiling Cassette–4 Way (3' x 3') 	093 TPAA	9,600	10,900
	123 TPAA	12,300	13,600
	153 TPAA	15,400	17,100
	183 TNAA	19,100	21,500
	243 TNAA	24,200	27,300
	243 TPC2	24,200	27,300
	283 TPC2	28,000	31,500
	363 TNC2	36,200	40,600
	423 TMC2	42,000	43,800
	483 TMC2	48,100	51,200

[1]All indoor units require 208–230V/60Hz/1Ph and an AWG18-2 communication cable. Reference LG's Multi V Indoor Unit Engineering Manual for complete detailed engineering data and selection procedures.

[2]Model number shows nominal capacity and frame size designator.

[3]Nominal cooling capacity rating obtained with air entering the indoor unit at 80ºF dry bulb (DB) and 67ºF wet bulb (WB) and outdoor ambient conditions of 95ºF dry bulb (DB) and 75ºF wet bulb (WB). Nominal heating capacity rating obtained with air entering the indoor unit at 70ºF dry bulb (DB) and 59ºF wet bulb (WB) and outdoor ambient conditions of 47ºF dry bulb (DB) and 43ºF wet bulb (WB).

Due to our policy of continuous product innovation, some specifications may change without notification.
©LG Electronics U.S.A., Inc., Englewood Cliffs, NJ. All rights reserved. "LG" is a registered trademark of LG Corp.

Table 10b: Summary Data—Recessed Mounted Indoor Units.

Unit / Type[1]	ARNU***[2]	Nominal Capacity Btu/h	
		Cooling[3]	Heating[3]
Ducted High Static 	073 BHA2	7,500	8,500
	093 BHA2	9,600	10,900
	123 BHA2	12,300	13,600
	153 BHA2	15,400	17,100
	183 BHA2	19,100	21,500
	243 BHA2	24,200	27,300
	153 BGA2	15,400	17,100
	183 BGA2	19,100	21,500
	243 BGA2	24,200	27,300
	283 BGA2	28,000	31,500
	363 BGA2	36,200	40,600
	423 BGA2	42,000	43,800
	483 BRA2	48,100	51,200
	543 BRA2	54,000	61,400
	763 B8A2	76,400	86,000
	963 B8A2	95,900	107,500
Ducted Low Static–Convertible 	073 B1G2	7,500	8,500
	093 B1G2	9,600	10,900
	123 B1G2	12,300	13,600
	153 B1G2	15,400	17,100
	183 B2G2	19,100	21,500
	243 B2G2	24,200	27,300
Ducted Low Static–Bottom Return 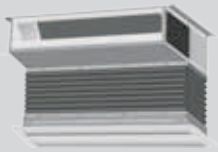	073 B3G2	7,500	8,500
	093 B3G2	9,600	10,900
	123 B3G2	12,300	13,600
	153 B3G2	15,400	17,100
	183 B4G2	19,100	21,500
	243 B4G2	24,200	27,300
Vertical / Horizontal Air Handling Unit 	123 NJ2	12,000	13,500
	183 NJA2	18,000	20,000
	243 NJA2	24,000	27,000
	303 NJA2	30,000	34,000
	363 NJA2	36,000	40,000
	423 NKA2	42,000	46,000
	483 NKA2	48,000	54,000
	543 NKA2	54,000	60,000

[1]All indoor units require 208–230V/60Hz/1Ph and an AWG18-2 communication cable. Reference LG's Multi V Indoor Unit Engineering Manual for complete detailed engineering data and selection procedures.

[2]Model number shows nominal capacity and frame size designator.

[3] Nominal cooling capacity rating obtained with air entering the indoor unit at 80ºF dry bulb (DB) and 67ºF wet bulb (WB) and outdoor ambient conditions of 95ºF dry bulb (DB) and 75ºF wet bulb (WB). Nominal heating capacity rating obtained with air entering the indoor unit at 70ºF dry bulb (DB) and 59ºF wet bulb (WB) and outdoor ambient conditions of 47ºF dry bulb (DB) and 43ºF wet bulb (WB).

Due to our policy of continuous product innovation, some specifications may change without notification.
©LG Electronics U.S.A., Inc., Englewood Cliffs, NJ. All rights reserved. "LG" is a registered trademark of LG Corp.

GENERAL DATA

Indoor Units

Table 11a: Summary Data—Surface Mounted / Freestanding Indoor Units.

Unit / Type[1]	ARNU****[2]	Nominal Capacity Btu/h	
		Cooling[3]	Heating[3]
Ceiling Suspended 	183VJA2	19,100	21,500
	243VJA2	24,200	27,300
Convertible Surface Mounted 	093VEA2	9,600	10,900
	123VEA2	12,300	13,600
Floor Standing–with Case 	073 CEA2	7,500	8,500
	093 CEA2	9,600	10,900
	123 CEA2	12,300	13,600
	153 CEA2	15,400	17,100
	183 CFA2	19,100	21,500
	243 CFA2	24,200	27,300
Floor Standing–without case 	073 CEU2	7,500	8,500
	093 CEU2	9,600	10,900
	123 CEU2	12,300	13,600
	153 CEU2	15,400	17,100
	183 CFU2	19,100	21,500
	243 CFU2	24,200	27,300

[1]All indoor units require 208–230V/60Hz/1Ph and an AWG18-2 communication cable. Reference LG's Multi V Indoor Unit Engineering Manual for complete detailed engineering data and selection procedures.

[2]Model # shows nominal capacity and frame size designator.

[3]Nominal cooling capacity rating obtained with air entering the indoor unit at 80ºF dry bulb (DB) and 67ºF wet bulb (WB) and outdoor ambient conditions of 95ºF dry bulb (DB) and 75ºF wet bulb (WB). Nominal heating capacity rating obtained with air entering the indoor unit at 70ºF dry bulb (DB) and 59ºF wet bulb (WB) and outdoor ambient conditions of 47ºF dry bulb (DB) and 43ºF wet bulb (WB).

Due to our policy of continuous product innovation, some specifications may change without notification.
©LG Electronics U.S.A., Inc., Englewood Cliffs, NJ. All rights reserved. "LG" is a registered trademark of LG Corp.

Table 12: Indoor Unit Controls and Options.

	Indoor Unit Type	Wall Mounted—Standard Finish	Wall Mounted—ART COOL™ Mirror	1-Way Cassette	2-Way Cassette	4-Way Cassette		Ducted High Static	Ducted Low Static-Convertible	Ducted Low Static—Bottom Return	Vert.-Horiz. AHU (NJ)	Vert.-Horiz. AHU (NK)	Ceiling Suspended	Convertible Surface Mount	Floor Mount—Cased	Floor Mount—Uncased
	Nominal Chassis Size (MBH)	7–24	7–24	7–12	18–24	5–18	24–48	7–96	7–24	7–24	1–3	3.5–4.5	18–24	9–12	7–24	7–24
Airflow	Air supply outlets	1	1	1	2	4	4	1	1	1	1	1	1	1	1	1
	Airflow direction (left/right)	manual / auto	auto										manual	manual		
	Auto airflow direction (up/down)	√	√	√	√	√	√						√	√		
	Fan speed (Heating mode) (qty.)	(3)	(3)	(4)	(4)	(4)	(4)	(3)	(3)	(3)	(3)	(3)	(3)	(3)	(3)	(3)
	Fan speed (Cooling mode) (qty.)	(4)	(4)	(5)	(5)	(5)	(5)	(3)	(3)	(3)	(3)	(3)	(4)	(4)	(3)	(3)
	Fan speed (Fan mode) (qty.)	(3)	(3)	(4)	(4)	(4)	(4)	(3)	(3)	(3)	(3)	(3)	(3)	(3)	(3)	(3)
	Chaos swing (random louver swing)	√	√													
	Chaos wind (random fan speed)	√	√	√	√	√	√						√	√		
	Jet-cool (power cooling)	√	√	√	√	√	√						√	√		
Operation	E.S.P. control			√	√	√	√	√	√	√	√	√			√	√
	High ceiling			√	√	√	√						√	√		
	Auto-restart after power restore	√	√	√	√	√	√	√	√	√	√	√	√	√	√	√
	Hot Start	√	√	√	√	√	√	√	√	√	√	√	√	√	√	√
	Diagnostics	√	√	√	√	√	√	√	√	√	√	√	√	√	√	√
	Soft Dry (dehumidification)	√	√	√	√	√	√	√	√	√	√	√	√	√	√	√
	Auto operation[7]	√	√	√	√	√	√	√	√	√	√	√	√	√	√	√
	Auto clean (coil dry)	√	√													
	Child lock	√	√	√	√	√	√	√	√	√	√	√	√	√	√	√
	Forced operation	√	√	√	√	√	√						√	√		
	Group control – Requires the use of one Group control Cable Kit (PZCWRCG3) for every additional indoor unit	√	√	√	√	√	√	√	√	√	√	√	√	√	√	√
	Sleep mode	√	√	√	√	√	√	√	√	√	√	√	√	√	√	√
	Timer (on/off)	√	√	√	√	√	√	√	√	√	√	√	√	√	√	√
	Weekly schedule	√	√	√	√	√	√	√	√	√	√	√	√	√	√	√
	Two thermistor control	√	√	√	√	√	√	√	√	√	√	√	√	√	√	√
	Test operation mode	√	√	√	√	√	√	√	√	√	√	√	√	√	√	√
Filter	Plasma[2]	√[4]	√[4]	√[4]	√[5]	√[5]	√[5]									
	Washable anti-fungal[1]	√	√	√	√	√	√	√	√	√			√	√	√	√
Controllers	7-day programmable controller	o	o	o	o	o	o	o	o	o	o	o	o	o	o	o
	Simple controller w/mode	o	o	o	o	o	o	o	o	o	o	o	o	o	o	o
	Simple controller w/o mode	o	o	o	o	o	o	o	o	o	o	o	o	o	o	o
	Wireless hand held controller	o	o	o	o	o	o	o[3]	o[3]	o[3]			o	o	o[3]	o[3]
Others	Condensate lift			√	√	√	√	√	√	√						
	Ventilation air			√		√[5]	√[5]	√	√	√						
	Casing	√	√	√	√	√	√						√	√	√	
	Standard grille			√	√	√	√									
	Auto elevation grille						√[5]									
	Color Panels (qty.)		(3)													
	Suction grille									o						
	Suction canvas									o						
	Aux. Heat Kit										√	√				

[1]Primary washable filters.

[2]Secondary plasma filters. Not available with ARNU093-153TPAA, ARNU183-243TNAA.

[3]Requires 7-day programmable zone controller.

[4]Requires ventilation kit PTVK430 (For TR, TQ frames) or PTVK410+PTVK420 (For TP, TN, TM frames)(Temperature, humidity, and volume limitations apply).

[5]Requires standard grille.

√ = Standard feature

o = Unit option

Due to our policy of continuous product innovation, some specifications may change without notification.
©LG Electronics U.S.A., Inc., Englewood Cliffs, NJ. All rights reserved. "LG" is a registered trademark of LG Corp.

Product Data

Due to our policy of continuous product innovation, some specifications may change without notification.
©LG Electronics U.S.A., Inc., Englewood Cliffs, NJ. All rights reserved. "LG" is a registered trademark of LG Corp.

PERFORMANCE DATA

“Performance Data” on page 41
“Electrical Characteristics” on page 161
“Acoustic Data” on page 163
“Sound Pressure Level” on page 164
“Refrigerant Flow Diagrams” on page 166
“Wiring Diagrams” on page 180

PERFORMANCE DATA

Cooling Capacity—ARWB096DA2 / ARWN096DA2 (460 Volt)

Table 13a: Cooling Capacity / ARWN096DA2

Combination Ratio (%) (Capacity index)	Inlet Water Temperature (°F)	Water Flow Rate (gpm)	Indoor Unit Entering Air Wet Bulb Temperature °F													
			57		61		64		67		70		73		76	
			TC MBh	PI kW	TC MBh	PI kW	TC MBh	PI kW	TC MBh	PI kW	TC MBh	PI kW	TC MBh	PI kW	TC MBh	PI kW
130	50	10.1	89.2	1.88	96.6	2.20	105.1	2.57	114.2	2.88	117.7	2.94	122.3	3.04	125.7	3.08
		13.2	89.2	1.85	96.6	2.17	105.1	2.52	114.2	2.83	117.7	2.90	122.3	2.99	125.7	3.04
		25.4	89.2	1.71	96.6	2.01	105.1	2.35	114.2	2.65	117.7	2.73	122.3	2.78	125.7	2.85
		31.7	89.2	1.66	96.6	1.98	105.1	2.31	114.2	2.59	117.7	2.67	122.3	2.74	125.7	2.77
	59	10.1	87.7	2.48	95.0	2.89	103.4	3.37	112.4	3.78	115.8	3.87	120.3	3.97	123.7	4.04
		13.2	87.7	2.43	95.0	2.84	103.4	3.31	112.4	3.72	115.8	3.81	120.3	3.91	123.7	3.98
		25.4	87.7	2.24	95.0	2.65	103.4	3.09	112.4	3.48	115.8	3.57	120.3	3.66	123.7	3.74
		31.7	87.7	2.18	95.0	2.60	103.4	3.03	112.4	3.41	115.8	3.50	120.3	3.59	123.7	3.65
	67	10.1	86.4	3.01	93.6	3.50	101.9	4.08	110.8	4.58	114.1	4.70	118.5	4.80	121.9	4.89
		13.2	86.4	2.95	93.6	3.44	101.9	4.01	110.8	4.51	114.1	4.62	118.5	4.73	121.9	4.82
		25.4	86.4	2.71	93.6	3.22	101.9	3.75	110.8	4.22	114.1	4.32	118.5	4.44	121.9	4.53
		31.7	86.4	2.64	93.6	3.15	101.9	3.67	110.8	4.14	114.1	4.24	118.5	4.35	121.9	4.43
	75	10.1	86.4	3.71	93.6	4.31	101.9	5.02	110.8	5.66	114.1	5.79	118.5	5.93	121.9	6.03
		13.2	86.4	3.64	93.6	4.24	101.9	4.94	110.8	5.57	114.1	5.70	118.5	5.84	121.9	5.94
		25.4	86.4	3.35	93.6	3.97	101.9	4.62	110.8	5.20	114.1	5.33	118.5	5.48	121.9	5.58
		31.7	86.4	3.25	93.6	3.88	101.9	4.53	110.8	5.10	114.1	5.23	118.5	5.37	121.9	5.46
	85	10.1	86.4	4.46	93.6	5.17	101.9	6.03	110.8	6.79	114.1	6.95	118.5	7.12	121.9	7.24
		13.2	86.4	4.37	93.6	5.09	101.9	5.93	110.8	6.68	114.1	6.84	118.5	7.01	121.9	7.13
		25.4	86.4	4.01	93.6	4.76	101.9	5.55	110.8	6.24	114.1	6.40	118.5	6.57	121.9	6.70
		31.7	86.4	3.90	93.6	4.66	101.9	5.43	110.8	6.12	114.1	6.28	118.5	6.44	121.9	6.55
	95	10.1	77.8	4.50	84.2	5.24	91.7	6.10	99.7	6.86	102.7	7.03	106.7	7.20	109.7	7.32
		13.2	77.8	4.41	84.2	5.15	91.7	6.00	99.7	6.75	102.7	6.92	106.7	7.09	109.7	7.21
		25.4	77.8	4.06	84.2	4.81	91.7	5.61	99.7	6.32	102.7	6.47	106.7	6.64	109.7	6.78
		31.7	77.8	3.95	84.2	4.71	91.7	5.49	99.7	6.19	102.7	6.35	106.7	6.51	109.7	6.62
	104	10.1	69.1	4.76	74.9	5.52	81.5	6.43	88.6	7.24	91.3	7.41	94.8	7.59	97.5	7.73
		13.2	69.1	4.66	74.9	5.43	81.5	6.33	88.6	7.12	91.3	7.29	94.8	7.47	97.5	7.61
		25.4	69.1	4.28	74.9	5.08	81.5	5.92	88.6	6.66	91.3	6.83	94.8	7.01	97.5	7.15
		31.7	69.1	4.16	74.9	4.97	81.5	5.79	88.6	6.53	91.3	6.70	94.8	6.87	97.5	6.99
	113	10.1	60.4	5.01	65.6	5.80	71.3	6.77	77.5	7.61	79.9	7.78	82.9	7.97	85.3	8.13
		13.2	60.4	4.91	65.6	5.71	71.3	6.66	77.5	7.49	79.9	7.66	82.9	7.85	85.3	8.01
		25.4	60.4	4.50	65.6	5.35	71.3	6.23	77.5	7.00	79.9	7.19	82.9	7.38	85.3	7.52
		31.7	60.4	4.37	65.6	5.23	71.3	6.09	77.5	6.87	79.9	7.05	82.9	7.23	85.3	7.36
120	50	10.1	84.4	1.79	91.3	2.09	99.5	2.42	108.1	2.73	111.3	2.81	115.8	2.88	119.0	2.91
		13.2	84.4	1.76	91.3	2.06	99.5	2.38	108.1	2.68	111.3	2.76	115.8	2.83	119.0	2.87
		25.4	84.4	1.61	91.3	1.92	99.5	2.24	108.1	2.51	111.3	2.57	115.8	2.63	119.0	2.69
		31.7	84.4	1.56	91.3	1.86	99.5	2.19	108.1	2.45	111.3	2.53	115.8	2.59	119.0	2.64
	59	10.1	83.4	2.38	90.3	2.77	98.4	3.21	106.9	3.62	110.1	3.71	114.4	3.80	117.6	3.86
		13.2	83.4	2.33	90.3	2.72	98.4	3.16	106.9	3.56	110.1	3.65	114.4	3.74	117.6	3.80
		25.4	83.4	2.14	90.3	2.54	98.4	2.96	106.9	3.33	110.1	3.41	114.4	3.50	117.6	3.57
		31.7	83.4	2.08	90.3	2.48	98.4	2.90	106.9	3.26	110.1	3.35	114.4	3.43	117.6	3.49
	67	10.1	82.5	2.90	89.4	3.37	97.4	3.91	105.8	4.41	109.0	4.51	113.2	4.62	116.4	4.70
		13.2	82.5	2.84	89.4	3.31	97.4	3.85	105.8	4.34	109.0	4.44	113.2	4.55	116.4	4.63
		25.4	82.5	2.61	89.4	3.09	97.4	3.60	105.8	4.06	109.0	4.16	113.2	4.27	116.4	4.35
		31.7	82.5	2.54	89.4	3.03	97.4	3.53	105.8	3.98	109.0	4.08	113.2	4.18	116.4	4.25
	75	10.1	82.5	3.56	89.4	4.14	97.4	4.82	105.8	5.42	109.0	5.55	113.2	5.69	116.4	5.79
		13.2	82.5	3.49	89.4	4.07	97.4	4.74	105.8	5.33	109.0	5.46	113.2	5.60	116.4	5.70
		25.4	82.5	3.21	89.4	3.80	97.4	4.43	105.8	4.99	109.0	5.11	113.2	5.24	116.4	5.35
		31.7	82.5	3.12	89.4	3.72	97.4	4.34	105.8	4.89	109.0	5.01	113.2	5.14	116.4	5.22
	85	10.1	82.5	4.29	89.4	5.00	97.4	5.83	105.8	6.56	109.0	6.71	113.2	6.88	116.4	7.00
		13.2	82.5	4.21	89.4	4.92	97.4	5.73	105.8	6.45	109.0	6.60	113.2	6.77	116.4	6.89
		25.4	82.5	3.88	89.4	4.60	97.4	5.35	105.8	6.03	109.0	6.18	113.2	6.34	116.4	6.46
		31.7	82.5	3.77	89.4	4.50	97.4	5.24	105.8	5.91	109.0	6.06	113.2	6.22	116.4	6.31
	95	10.1	75.5	4.41	81.8	5.12	89.1	5.97	96.8	6.72	99.7	6.88	103.6	7.04	106.5	7.17
		13.2	75.5	4.32	81.8	5.04	89.1	5.87	96.8	6.61	99.7	6.77	103.6	6.93	106.5	7.06
		25.4	75.5	3.97	81.8	4.71	89.1	5.49	96.8	6.18	99.7	6.33	103.6	6.50	106.5	6.62
		31.7	75.5	3.86	81.8	4.61	89.1	5.38	96.8	6.06	99.7	6.21	103.6	6.37	106.5	6.47
	104	10.1	68.5	4.74	74.2	5.51	80.8	6.42	87.9	7.23	90.5	7.40	94.0	7.58	96.6	7.72
		13.2	68.5	4.65	74.2	5.42	80.8	6.32	87.9	7.11	90.5	7.28	94.0	7.46	96.6	7.60
		25.4	68.5	4.28	74.2	5.07	80.8	5.91	87.9	6.65	90.5	6.81	94.0	6.99	96.6	7.13
		31.7	68.5	4.16	74.2	4.96	80.8	5.79	87.9	6.52	90.5	6.69	94.0	6.86	96.6	6.96
	113	10.1	61.5	5.08	66.6	5.89	72.5	6.88	79.0	7.73	81.3	7.92	84.4	8.12	86.7	8.27
		13.2	61.5	4.98	66.6	5.80	72.5	6.77	79.0	7.61	81.3	7.79	84.4	7.99	86.7	8.14
		25.4	61.5	4.59	66.6	5.43	72.5	6.33	79.0	7.12	81.3	7.29	84.4	7.48	86.7	7.64
		31.7	61.5	4.46	66.6	5.31	72.5	6.20	79.0	6.98	81.3	7.17	84.4	7.35	86.7	7.45

TC = Total Cooling Capacity (MBh).
PI = Power input (KW).
Power input (KW) includes compressor(s) and controls.
Test condition based on 25 feet of equivalent refrigerant piping and no change in elevation between indoor unit and water source unit.

Due to our policy of continuous product innovation, some specifications may change without notification.
©LG Electronics U.S.A., Inc., Englewood Cliffs, NJ. All rights reserved. "LG" is a registered trademark of LG Corp.

Table 13b: Cooling Capacity ARWB096DA2 / ARWN096DA2

Combination Ratio (%) (Capacity index)	Inlet Water Temperature (°F)	Water Flow Rate (gpm)	Indoor Unit Entering Air Wet Bulb Temperature °F													
			57		61		64		67		70		73		76	
			TC MBh	PI kW	TC MBh	PI kW	TC MBh	PI kW	TC MBh	PI kW	TC MBh	PI kW	TC MBh	PI kW	TC MBh	PI kW
110	50	10.1	79.6	1.69	86.3	1.96	93.9	2.29	102.0	2.58	105.0	2.63	109.2	2.71	112.1	2.75
		13.2	79.6	1.66	86.3	1.93	93.9	2.26	102.0	2.53	105.0	2.59	109.2	2.67	112.1	2.71
		25.4	79.6	1.52	86.3	1.80	93.9	2.10	102.0	2.37	105.0	2.44	109.2	2.50	112.1	2.53
		31.7	79.6	1.48	86.3	1.76	93.9	2.05	102.0	2.33	105.0	2.37	109.2	2.45	112.1	2.48
	59	10.1	79.1	2.27	85.7	2.63	93.3	3.07	101.4	3.46	104.4	3.54	108.5	3.63	111.5	3.69
		13.2	79.1	2.22	85.7	2.59	93.3	3.02	101.4	3.40	104.4	3.48	108.5	3.57	111.5	3.63
		25.4	79.1	2.04	85.7	2.42	93.3	2.82	101.4	3.18	104.4	3.26	108.5	3.34	111.5	3.40
		31.7	79.1	1.99	85.7	2.37	93.3	2.76	101.4	3.12	104.4	3.19	108.5	3.28	111.5	3.32
	67	10.1	78.7	2.78	85.2	3.23	92.8	3.76	100.9	4.24	103.9	4.34	107.9	4.44	111.0	4.52
		13.2	78.7	2.72	85.2	3.18	92.8	3.70	100.9	4.17	103.9	4.27	107.9	4.37	111.0	4.45
		25.4	78.7	2.50	85.2	2.97	92.8	3.46	100.9	3.90	103.9	3.99	107.9	4.09	111.0	4.17
		31.7	78.7	2.44	85.2	2.91	92.8	3.39	100.9	3.82	103.9	3.92	107.9	4.02	111.0	4.07
	75	10.1	78.7	3.40	85.2	3.95	92.8	4.60	100.9	5.18	103.9	5.30	107.9	5.44	111.0	5.54
		13.2	78.7	3.33	85.2	3.89	92.8	4.53	100.9	5.10	103.9	5.22	107.9	5.35	111.0	5.45
		25.4	78.7	3.07	85.2	3.64	92.8	4.24	100.9	4.77	103.9	4.89	107.9	5.01	111.0	5.11
		31.7	78.7	2.98	85.2	3.56	92.8	4.15	100.9	4.68	103.9	4.79	107.9	4.92	111.0	4.98
	85	10.1	78.7	4.14	85.2	4.82	92.8	5.61	100.9	6.32	103.9	6.47	107.9	6.62	111.0	6.75
		13.2	78.7	4.06	85.2	4.74	92.8	5.52	100.9	6.22	103.9	6.37	107.9	6.52	111.0	6.64
		25.4	78.7	3.74	85.2	4.43	92.8	5.16	100.9	5.81	103.9	5.96	107.9	6.11	111.0	6.22
		31.7	78.7	3.64	85.2	4.34	92.8	5.06	100.9	5.70	103.9	5.84	107.9	5.99	111.0	6.07
	95	10.1	73.3	4.32	79.4	5.01	86.5	5.83	94.0	6.58	96.8	6.73	100.6	6.89	103.4	7.02
		13.2	73.3	4.23	79.4	4.93	86.5	5.74	94.0	6.47	96.8	6.62	100.6	6.78	103.4	6.91
		25.4	73.3	3.89	79.4	4.61	86.5	5.37	94.0	6.05	96.8	6.19	100.6	6.35	103.4	6.47
		31.7	73.3	3.78	79.4	4.51	86.5	5.26	94.0	5.93	96.8	6.08	100.6	6.23	103.4	6.31
	104	10.1	67.9	4.73	73.6	5.51	80.1	6.41	87.1	7.22	89.7	7.39	93.2	7.57	95.8	7.71
		13.2	67.9	4.64	73.6	5.42	80.1	6.31	87.1	7.10	89.7	7.27	93.2	7.45	95.8	7.59
		25.4	67.9	4.27	73.6	5.06	80.1	5.90	87.1	6.64	89.7	6.80	93.2	6.98	95.8	7.11
		31.7	67.9	4.15	73.6	4.95	80.1	5.78	87.1	6.51	89.7	6.68	93.2	6.85	95.8	6.93
	113	10.1	62.5	5.15	67.8	6.01	73.7	6.99	80.2	7.86	82.6	8.05	85.8	8.25	88.2	8.40
		13.2	62.5	5.05	67.8	5.91	73.7	6.88	80.2	7.73	82.6	7.92	85.8	8.12	88.2	8.27
		25.4	62.5	4.65	67.8	5.51	73.7	6.43	80.2	7.23	82.6	7.41	85.8	7.61	88.2	7.75
		31.7	62.5	4.52	67.8	5.39	73.7	6.30	80.2	7.09	82.6	7.28	85.8	7.47	88.2	7.55
100	50	10.1	74.8	1.60	81.0	1.86	88.2	2.14	95.9	2.44	98.8	2.47	102.6	2.55	105.5	2.60
		13.2	74.8	1.57	81.0	1.83	88.2	2.11	95.9	2.40	98.8	2.43	102.6	2.51	105.5	2.56
		25.4	74.8	1.44	81.0	1.70	88.2	1.98	95.9	2.24	98.8	2.29	102.6	2.35	105.5	2.40
		31.7	74.8	1.40	81.0	1.66	88.2	1.93	95.9	2.19	98.8	2.24	102.6	2.30	105.5	2.32
	59	10.1	74.8	2.16	81.0	2.51	88.2	2.92	95.9	3.29	98.8	3.36	102.6	3.46	105.5	3.52
		13.2	74.8	2.12	81.0	2.47	88.2	2.87	95.9	3.24	98.8	3.31	102.6	3.40	105.5	3.46
		25.4	74.8	1.95	81.0	2.31	88.2	2.69	95.9	3.03	98.8	3.10	102.6	3.18	105.5	3.24
		31.7	74.8	1.89	81.0	2.26	88.2	2.63	95.9	2.97	98.8	3.04	102.6	3.12	105.5	3.15
	67	10.1	74.8	2.66	81.0	3.09	88.2	3.61	95.9	4.06	98.8	4.16	102.6	4.26	105.5	4.33
		13.2	74.8	2.61	81.0	3.04	88.2	3.55	95.9	3.99	98.8	4.09	102.6	4.19	105.5	4.26
		25.4	74.8	2.40	81.0	2.85	88.2	3.32	95.9	3.73	98.8	3.82	102.6	3.92	105.5	3.99
		31.7	74.8	2.33	81.0	2.79	88.2	3.25	95.9	3.66	98.8	3.75	102.6	3.85	105.5	3.89
	75	10.1	74.8	3.24	81.0	3.77	88.2	4.39	95.9	4.95	98.8	5.07	102.6	5.19	105.5	5.28
		13.2	74.8	3.18	81.0	3.71	88.2	4.32	95.9	4.87	98.8	4.99	102.6	5.11	105.5	5.20
		25.4	74.8	2.93	81.0	3.47	88.2	4.04	95.9	4.55	98.8	4.66	102.6	4.78	105.5	4.87
		31.7	74.8	2.85	81.0	3.40	88.2	3.96	95.9	4.46	98.8	4.57	102.6	4.69	105.5	4.74
	85	10.1	74.8	3.99	81.0	4.65	88.2	5.41	95.9	6.09	98.8	6.23	102.6	6.38	105.5	6.50
		13.2	74.8	3.91	81.0	4.57	88.2	5.32	95.9	5.99	98.8	6.13	102.6	6.28	105.5	6.40
		25.4	74.8	3.60	81.0	4.27	88.2	4.97	95.9	5.60	98.8	5.73	102.6	5.88	105.5	5.99
		31.7	74.8	3.50	81.0	4.18	88.2	4.87	95.9	5.49	98.8	5.63	102.6	5.77	105.5	5.83
	95	10.1	71.1	4.21	77.0	4.90	83.8	5.70	91.1	6.42	93.8	6.58	97.5	6.74	100.2	6.86
		13.2	71.1	4.13	77.0	4.82	83.8	5.61	91.1	6.32	93.8	6.47	97.5	6.63	100.2	6.75
		25.4	71.1	3.80	77.0	4.51	83.8	5.25	91.1	5.91	93.8	6.05	97.5	6.21	100.2	6.32
		31.7	71.1	3.70	77.0	4.41	83.8	5.14	91.1	5.80	93.8	5.94	97.5	6.09	100.2	6.15
	104	10.1	67.3	4.74	72.9	5.50	79.4	6.40	86.3	7.21	88.9	7.38	92.4	7.56	94.9	7.69
		13.2	67.3	4.64	72.9	5.41	79.4	6.30	86.3	7.09	88.9	7.26	92.4	7.44	94.9	7.57
		25.4	67.3	4.26	72.9	5.06	79.4	5.89	86.3	6.63	88.9	6.79	92.4	6.96	94.9	7.09
		31.7	67.3	4.15	72.9	4.95	79.4	5.77	86.3	6.50	88.9	6.66	92.4	6.83	94.9	6.90
	113	10.1	63.5	5.26	68.8	6.10	75.0	7.11	81.5	7.99	84.0	8.18	87.3	8.39	89.6	8.52
		13.2	63.5	5.15	68.8	6.00	75.0	6.99	81.5	7.86	84.0	8.05	87.3	8.25	89.6	8.39
		25.4	63.5	4.72	68.8	5.61	75.0	6.53	81.5	7.35	84.0	7.53	87.3	7.71	89.6	7.86
		31.7	63.5	4.60	68.8	5.49	75.0	6.40	81.5	7.20	84.0	7.38	87.3	7.57	89.6	7.65

TC = Total Cooling Capacity (MBh).
PI = Power input (KW).
Power input (KW) includes compressor(s) and controls.
Test condition based on 25 feet of equivalent refrigerant piping and no change in elevation between indoor unit and water source unit.

LG

Due to our policy of continuous product innovation, some specifications may change without notification.
©LG Electronics U.S.A., Inc., Englewood Cliffs, NJ. All rights reserved. "LG" is a registered trademark of LG Corp.

PERFORMANCE DATA

Cooling Capacity—ARWB096DA2 / ARWN096DA2 (460 Volt)

Table 13c: Cooling Capacity ARWB096DA2 / ARWN096DA2

Combination Ratio (%) (Capacity index)	Inlet Water Temperature (°F)	Water Flow Rate (gpm)	Indoor Unit Entering Air Wet Bulb Temperature °F													
			57		61		64		67		70		73		76	
			TC MBh	PI kW	TC MBh	PI kW	TC MBh	PI kW	TC MBh	PI kW	TC MBh	PI kW	TC MBh	PI kW	TC MBh	PI kW
90	50	10.1	67.3	1.36	72.9	1.58	79.4	1.85	86.3	2.09	88.9	2.13	92.4	2.17	94.9	2.24
		13.2	67.3	1.34	72.9	1.56	79.4	1.82	86.3	2.06	88.9	2.10	92.4	2.14	94.9	2.20
		25.4	67.3	1.24	72.9	1.47	79.4	1.70	86.3	1.94	88.9	1.97	92.4	2.03	94.9	2.06
		31.7	67.3	1.20	72.9	1.42	79.4	1.67	86.3	1.88	88.9	1.93	92.4	1.99	94.9	1.99
	59	10.1	67.3	1.86	72.9	2.15	79.4	2.51	86.3	2.84	88.9	2.90	92.4	2.97	94.9	3.03
		13.2	67.3	1.82	72.9	2.12	79.4	2.47	86.3	2.79	88.9	2.85	92.4	2.92	94.9	2.98
		25.4	67.3	1.68	72.9	1.99	79.4	2.31	86.3	2.61	88.9	2.67	92.4	2.74	94.9	2.79
		31.7	67.3	1.63	72.9	1.94	79.4	2.27	86.3	2.55	88.9	2.62	92.4	2.69	94.9	2.71
	67	10.1	67.3	2.30	72.9	2.66	79.4	3.10	86.3	3.50	88.9	3.58	92.4	3.67	94.9	3.73
		13.2	67.3	2.25	72.9	2.62	79.4	3.05	86.3	3.44	88.9	3.52	92.4	3.61	94.9	3.67
		25.4	67.3	2.07	72.9	2.45	79.4	2.85	86.3	3.21	88.9	3.29	92.4	3.37	94.9	3.44
		31.7	67.3	2.01	72.9	2.40	79.4	2.80	86.3	3.15	88.9	3.23	92.4	3.31	94.9	3.35
	75	10.1	67.3	2.80	72.9	3.25	79.4	3.78	86.3	4.26	88.9	4.36	92.4	4.47	94.9	4.55
		13.2	67.3	2.74	72.9	3.20	79.4	3.72	86.3	4.19	88.9	4.29	92.4	4.40	94.9	4.48
		25.4	67.3	2.52	72.9	2.99	79.4	3.48	86.3	3.92	88.9	4.01	92.4	4.12	94.9	4.19
		31.7	67.3	2.45	72.9	2.92	79.4	3.41	86.3	3.84	88.9	3.94	92.4	4.04	94.9	4.08
	85	10.1	67.3	3.44	72.9	4.00	79.4	4.66	86.3	5.25	88.9	5.37	92.4	5.50	94.9	5.60
		13.2	67.3	3.37	72.9	3.93	79.4	4.58	86.3	5.16	88.9	5.28	92.4	5.41	94.9	5.51
		25.4	67.3	3.10	72.9	3.67	79.4	4.28	86.3	4.82	88.9	4.94	92.4	5.06	94.9	5.15
		31.7	67.3	3.01	72.9	3.60	79.4	4.19	86.3	4.73	88.9	4.84	92.4	4.97	94.9	5.02
	95	10.1	65.5	3.72	70.9	4.31	77.2	5.02	83.9	5.65	86.4	5.78	89.8	5.92	92.3	6.04
		13.2	65.5	3.64	70.9	4.24	77.2	4.94	83.9	5.56	86.4	5.69	89.8	5.83	92.3	5.94
		25.4	65.5	3.34	70.9	3.96	77.2	4.62	83.9	5.20	86.4	5.32	89.8	5.46	92.3	5.56
		31.7	65.5	3.25	70.9	3.88	77.2	4.52	83.9	5.10	86.4	5.23	89.8	5.36	92.3	5.41
	104	10.1	63.6	4.27	68.9	4.95	75.0	5.76	81.5	6.50	84.0	6.65	87.2	6.81	89.7	6.93
		13.2	63.6	4.18	68.9	4.87	75.0	5.67	81.5	6.39	84.0	6.54	87.2	6.70	89.7	6.82
		25.4	63.6	3.84	68.9	4.55	75.0	5.31	81.5	5.97	84.0	6.12	87.2	6.27	89.7	6.39
		31.7	63.6	3.73	68.9	4.46	75.0	5.20	81.5	5.86	84.0	6.00	87.2	6.16	89.7	6.22
	113	10.1	61.7	4.82	66.9	5.59	72.8	6.50	79.1	7.34	81.6	7.51	84.6	7.69	87.1	7.82
		13.2	61.7	4.72	66.9	5.50	72.8	6.40	79.1	7.22	81.6	7.39	84.6	7.57	87.1	7.70
		25.4	61.7	4.34	66.9	5.14	72.8	6.00	79.1	6.74	81.6	6.92	84.6	7.08	87.1	7.22
		31.7	61.7	4.21	66.9	5.04	72.8	5.88	79.1	6.62	81.6	6.77	84.6	6.96	87.1	7.03
80	50	10.1	59.8	1.16	64.8	1.32	70.6	1.54	76.7	1.76	79.0	1.79	82.1	1.84	84.4	1.86
		13.2	59.8	1.14	64.8	1.31	70.6	1.52	76.7	1.73	79.0	1.76	82.1	1.81	84.4	1.83
		25.4	59.8	1.03	64.8	1.24	70.6	1.43	76.7	1.61	79.0	1.66	82.1	1.68	84.4	1.71
		31.7	59.8	1.02	64.8	1.20	70.6	1.41	76.7	1.58	79.0	1.61	82.1	1.65	84.4	1.67
	59	10.1	59.8	1.56	64.8	1.81	70.6	2.10	76.7	2.38	79.0	2.43	82.1	2.49	84.4	2.53
		13.2	59.8	1.53	64.8	1.78	70.6	2.07	76.7	2.34	79.0	2.39	82.1	2.45	84.4	2.49
		25.4	59.8	1.40	64.8	1.67	70.6	1.94	76.7	2.18	79.0	2.24	82.1	2.29	84.4	2.33
		31.7	59.8	1.37	64.8	1.63	70.6	1.90	76.7	2.14	79.0	2.19	82.1	2.25	84.4	2.27
	67	10.1	59.8	1.92	64.8	2.24	70.6	2.60	76.7	2.93	79.0	3.00	82.1	3.07	84.4	3.13
		13.2	59.8	1.88	64.8	2.20	70.6	2.56	76.7	2.88	79.0	2.95	82.1	3.02	84.4	3.08
		25.4	59.8	1.73	64.8	2.05	70.6	2.39	76.7	2.69	79.0	2.76	82.1	2.83	84.4	2.88
		31.7	59.8	1.68	64.8	2.01	70.6	2.34	76.7	2.64	79.0	2.71	82.1	2.78	84.4	2.80
	75	10.1	59.8	2.35	64.8	2.73	70.6	3.17	76.7	3.57	79.0	3.66	82.1	3.75	84.4	3.81
		13.2	59.8	2.30	64.8	2.68	70.6	3.12	76.7	3.51	79.0	3.60	82.1	3.69	84.4	3.75
		25.4	59.8	2.11	64.8	2.50	70.6	2.92	76.7	3.29	79.0	3.36	82.1	3.45	84.4	3.51
		31.7	59.8	2.05	64.8	2.45	70.6	2.86	76.7	3.22	79.0	3.30	82.1	3.39	84.4	3.42
	85	10.1	59.8	2.88	64.8	3.34	70.6	3.90	76.7	4.39	79.0	4.49	82.1	4.60	84.4	4.70
		13.2	59.8	2.82	64.8	3.29	70.6	3.84	76.7	4.32	79.0	4.42	82.1	4.53	84.4	4.62
		25.4	59.8	2.60	64.8	3.08	70.6	3.59	76.7	4.04	79.0	4.14	82.1	4.24	84.4	4.32
		31.7	59.8	2.53	64.8	3.01	70.6	3.51	76.7	3.96	79.0	4.06	82.1	4.16	84.4	4.21
	95	10.1	59.8	3.20	64.8	3.72	70.6	4.33	76.7	4.88	79.0	5.00	82.1	5.12	84.4	5.21
		13.2	59.8	3.14	64.8	3.66	70.6	4.26	76.7	4.80	79.0	4.92	82.1	5.04	84.4	5.13
		25.4	59.8	2.89	64.8	3.42	70.6	3.99	76.7	4.49	79.0	4.60	82.1	4.71	84.4	4.80
		31.7	59.8	2.81	64.8	3.35	70.6	3.91	76.7	4.40	79.0	4.51	82.1	4.63	84.4	4.67
	104	10.1	59.8	3.80	64.8	4.41	70.6	5.13	76.7	5.78	79.0	5.92	82.1	6.07	84.4	6.17
		13.2	59.8	3.72	64.8	4.34	70.6	5.05	76.7	5.69	79.0	5.82	82.1	5.97	84.4	6.07
		25.4	59.8	3.42	64.8	4.05	70.6	4.72	76.7	5.32	79.0	5.44	82.1	5.58	84.4	5.68
		31.7	59.8	3.32	64.8	3.97	70.6	4.62	76.7	5.21	79.0	5.34	82.1	5.48	84.4	5.53
	113	10.1	59.8	4.39	64.8	5.11	70.6	5.94	76.7	6.69	79.0	6.83	82.1	7.01	84.4	7.12
		13.2	59.8	4.30	64.8	5.02	70.6	5.84	76.7	6.58	79.0	6.72	82.1	6.90	84.4	7.01
		25.4	59.8	3.95	64.8	4.68	70.6	5.45	76.7	6.15	79.0	6.28	82.1	6.45	84.4	6.56
		31.7	59.8	3.83	64.8	4.59	70.6	5.33	76.7	6.02	79.0	6.17	82.1	6.33	84.4	6.39

TC = Total Cooling Capacity (MBh).
PI = Power input (KW).
Power input (KW) includes compressor(s) and controls.
Test condition based on 25 feet of equivalent refrigerant piping and no change in elevation between indoor unit and water source unit.

Due to our policy of continuous product innovation, some specifications may change without notification.
©LG Electronics U.S.A., Inc., Englewood Cliffs, NJ. All rights reserved. "LG" is a registered trademark of LG Corp.

PERFORMANCE DATA

Cooling Capacity—ARWB096DA2 / ARWN096DA2 (460 Volt)

Table 13d: Cooling Capacity ARWB096DA2 / ARWN096DA2

Combination Ratio (%) (Capacity index)	Inlet Water Temperature (°F)	Water Flow Rate (gpm)	Indoor Unit Entering Air Wet Bulb Temperature °F													
			57		61		64		67		70		73		76	
			TC MBh	PI kW	TC MBh	PI kW	TC MBh	PI kW	TC MBh	PI kW	TC MBh	PI kW	TC MBh	PI kW	TC MBh	PI kW
70	50	10.1	52.4	0.95	56.7	1.11	61.8	1.28	67.1	1.44	69.1	1.50	71.8	1.54	73.8	1.54
		13.2	52.4	0.93	56.7	1.09	61.8	1.26	67.1	1.42	69.1	1.47	71.8	1.51	73.8	1.52
		25.4	52.4	0.87	56.7	1.01	61.8	1.18	67.1	1.35	69.1	1.38	71.8	1.42	73.8	1.43
		31.7	52.4	0.85	56.7	0.99	61.8	1.16	67.1	1.31	69.1	1.34	71.8	1.38	73.8	1.40
	59	10.1	52.4	1.30	56.7	1.51	61.8	1.75	67.1	1.97	69.1	2.02	71.8	2.07	73.8	2.10
		13.2	52.4	1.27	56.7	1.48	61.8	1.72	67.1	1.94	69.1	1.99	71.8	2.04	73.8	2.07
		25.4	52.4	1.17	56.7	1.38	61.8	1.61	67.1	1.82	69.1	1.86	71.8	1.91	73.8	1.94
		31.7	52.4	1.14	56.7	1.35	61.8	1.58	67.1	1.78	69.1	1.82	71.8	1.87	73.8	1.89
	67	10.1	52.4	1.60	56.7	1.86	61.8	2.17	67.1	2.44	69.1	2.49	71.8	2.55	73.8	2.60
		13.2	52.4	1.57	56.7	1.83	61.8	2.13	67.1	2.40	69.1	2.45	71.8	2.51	73.8	2.56
		25.4	52.4	1.44	56.7	1.71	61.8	1.99	67.1	2.24	69.1	2.29	71.8	2.35	73.8	2.39
		31.7	52.4	1.40	56.7	1.67	61.8	1.95	67.1	2.20	69.1	2.25	71.8	2.31	73.8	2.33
	75	10.1	52.4	1.95	56.7	2.27	61.8	2.63	67.1	2.97	69.1	3.04	71.8	3.11	73.8	3.17
		13.2	52.4	1.91	56.7	2.23	61.8	2.59	67.1	2.92	69.1	2.99	71.8	3.06	73.8	3.12
		25.4	52.4	1.76	56.7	2.08	61.8	2.43	67.1	2.73	69.1	2.80	71.8	2.87	73.8	2.92
		31.7	52.4	1.71	56.7	2.04	61.8	2.38	67.1	2.68	69.1	2.74	71.8	2.81	73.8	2.84
	85	10.1	52.4	2.40	56.7	2.79	61.8	3.24	67.1	3.65	69.1	3.74	71.8	3.83	73.8	3.90
		13.2	52.4	2.35	56.7	2.74	61.8	3.19	67.1	3.59	69.1	3.68	71.8	3.77	73.8	3.84
		25.4	52.4	2.16	56.7	2.56	61.8	2.98	67.1	3.36	69.1	3.44	71.8	3.53	73.8	3.59
		31.7	52.4	2.10	56.7	2.51	61.8	2.92	67.1	3.29	69.1	3.38	71.8	3.46	73.8	3.50
	95	10.1	52.4	2.66	56.7	3.09	61.8	3.61	67.1	4.06	69.1	4.16	71.8	4.26	73.8	4.33
		13.2	52.4	2.61	56.7	3.04	61.8	3.55	67.1	3.99	69.1	4.09	71.8	4.19	73.8	4.26
		25.4	52.4	2.40	56.7	2.85	61.8	3.31	67.1	3.73	69.1	3.82	71.8	3.92	73.8	3.99
		31.7	52.4	2.33	56.7	2.78	61.8	3.25	67.1	3.66	69.1	3.75	71.8	3.85	73.8	3.89
	104	10.1	52.4	3.15	56.7	3.66	61.8	4.27	67.1	4.81	69.1	4.92	71.8	5.04	73.8	5.13
		13.2	52.4	3.09	56.7	3.60	61.8	4.20	67.1	4.73	69.1	4.84	71.8	4.96	73.8	5.05
		25.4	52.4	2.84	56.7	3.37	61.8	3.93	67.1	4.42	69.1	4.53	71.8	4.64	73.8	4.73
		31.7	52.4	2.76	56.7	3.30	61.8	3.84	67.1	4.33	69.1	4.44	71.8	4.56	73.8	4.60
	113	10.1	52.4	3.64	56.7	4.23	61.8	4.93	67.1	5.56	69.1	5.68	71.8	5.82	73.8	5.93
		13.2	52.4	3.57	56.7	4.16	61.8	4.85	67.1	5.47	69.1	5.59	71.8	5.73	73.8	5.84
		25.4	52.4	3.28	56.7	3.89	61.8	4.55	67.1	5.11	69.1	5.24	71.8	5.36	73.8	5.47
		31.7	52.4	3.19	56.7	3.82	61.8	4.43	67.1	5.00	69.1	5.13	71.8	5.27	73.8	5.31
60	50	10.1	44.9	0.75	48.6	0.88	52.9	1.01	57.5	1.16	59.3	1.20	61.6	1.21	63.3	1.23
		13.2	44.9	0.74	48.6	0.87	52.9	1.00	57.5	1.15	59.3	1.17	61.6	1.19	63.3	1.21
		25.4	44.9	0.68	48.6	0.81	52.9	0.95	57.5	1.07	59.3	1.09	61.6	1.13	63.3	1.15
		31.7	44.9	0.65	48.6	0.80	52.9	0.93	57.5	1.05	59.3	1.07	61.6	1.10	63.3	1.12
	59	10.1	44.9	1.03	48.6	1.20	52.9	1.39	57.5	1.58	59.3	1.62	61.6	1.65	63.3	1.68
		13.2	44.9	1.01	48.6	1.18	52.9	1.37	57.5	1.55	59.3	1.59	61.6	1.62	63.3	1.65
		25.4	44.9	0.93	48.6	1.10	52.9	1.29	57.5	1.45	59.3	1.48	61.6	1.52	63.3	1.55
		31.7	44.9	0.90	48.6	1.08	52.9	1.26	57.5	1.42	59.3	1.45	61.6	1.49	63.3	1.51
	67	10.1	44.9	1.28	48.6	1.49	52.9	1.73	57.5	1.94	59.3	1.99	61.6	2.03	63.3	2.07
		13.2	44.9	1.25	48.6	1.46	52.9	1.70	57.5	1.91	59.3	1.96	61.6	2.00	63.3	2.04
		25.4	44.9	1.15	48.6	1.36	52.9	1.59	57.5	1.79	59.3	1.83	61.6	1.87	63.3	1.91
		31.7	44.9	1.12	48.6	1.33	52.9	1.55	57.5	1.75	59.3	1.79	61.6	1.84	63.3	1.86
	75	10.1	44.9	1.55	48.6	1.81	52.9	2.11	57.5	2.37	59.3	2.42	61.6	2.48	63.3	2.53
		13.2	44.9	1.52	48.6	1.78	52.9	2.07	57.5	2.33	59.3	2.38	61.6	2.44	63.3	2.49
		25.4	44.9	1.40	48.6	1.66	52.9	1.93	57.5	2.18	59.3	2.23	61.6	2.29	63.3	2.33
		31.7	44.9	1.36	48.6	1.62	52.9	1.89	57.5	2.13	59.3	2.19	61.6	2.24	63.3	2.27
	85	10.1	44.9	1.91	48.6	2.22	52.9	2.58	57.5	2.91	59.3	2.98	61.6	3.05	63.3	3.11
		13.2	44.9	1.87	48.6	2.18	52.9	2.54	57.5	2.86	59.3	2.93	61.6	3.00	63.3	3.06
		25.4	44.9	1.72	48.6	2.04	52.9	2.38	57.5	2.68	59.3	2.74	61.6	2.81	63.3	2.86
		31.7	44.9	1.67	48.6	2.00	52.9	2.33	57.5	2.63	59.3	2.69	61.6	2.76	63.3	2.79
	95	10.1	44.9	2.12	48.6	2.47	52.9	2.88	57.5	3.23	59.3	3.31	61.6	3.40	63.3	3.46
		13.2	44.9	2.08	48.6	2.43	52.9	2.83	57.5	3.18	59.3	3.26	61.6	3.34	63.3	3.40
		25.4	44.9	1.91	48.6	2.27	52.9	2.64	57.5	2.98	59.3	3.05	61.6	3.12	63.3	3.18
		31.7	44.9	1.86	48.6	2.22	52.9	2.59	57.5	2.92	59.3	2.99	61.6	3.07	63.3	3.10
	104	10.1	44.9	2.51	48.6	2.92	52.9	3.41	57.5	3.83	59.3	3.92	61.6	4.01	63.3	4.10
		13.2	44.9	2.46	48.6	2.87	52.9	3.35	57.5	3.77	59.3	3.86	61.6	3.95	63.3	4.03
		25.4	44.9	2.27	48.6	2.69	52.9	3.13	57.5	3.52	59.3	3.61	61.6	3.70	63.3	3.77
		31.7	44.9	2.20	48.6	2.63	52.9	3.07	57.5	3.45	59.3	3.54	61.6	3.63	63.3	3.67
	113	10.1	44.9	2.89	48.6	3.36	52.9	3.93	57.5	4.44	59.3	4.53	61.6	4.63	63.3	4.74
		13.2	44.9	2.84	48.6	3.31	52.9	3.87	57.5	4.36	59.3	4.46	61.6	4.56	63.3	4.66
		25.4	44.9	2.63	48.6	3.11	52.9	3.62	57.5	4.06	59.3	4.17	61.6	4.28	63.3	4.36
		31.7	44.9	2.54	48.6	3.04	52.9	3.55	57.5	3.98	59.3	4.09	61.6	4.19	63.3	4.24

TC = Total Cooling Capacity (MBh).
PI = Power input (KW).
Power input (KW) includes compressor(s) and controls.
Test condition based on 25 feet of equivalent refrigerant piping and no change in elevation between indoor unit and water source unit.

Due to our policy of continuous product innovation, some specifications may change without notification.
©LG Electronics U.S.A., Inc., Englewood Cliffs, NJ. All rights reserved. "LG" is a registered trademark of LG Corp.

PERFORMANCE DATA

Cooling Capacity—ARWB096DA2 / ARWN096DA2 (460 Volt)

Table 13e: Cooling Capacity ARWB096DA2 / ARWN096DA2

Combination Ratio (%) (Capacity index)	Inlet Water Temperature (°F)	Water Flow Rate (gpm)	Indoor Unit Entering Air Wet Bulb Temperature °F													
			57		61		64		67		70		73		76	
			TC	PI	TC	PI	TC	PI	TC	PI	TC	PI	TC	PI	TC	PI
			MBh	kW	MBh	kW	MBh	kW	MBh	kW	MBh	kW	MBh	kW	MBh	kW
50	50	10.1	37.4	0.56	40.5	0.65	44.1	0.79	48.0	0.86	49.4	0.87	51.3	0.91	52.7	0.92
		13.2	37.4	0.55	40.5	0.64	44.1	0.77	48.0	0.85	49.4	0.87	51.3	0.90	52.7	0.90
		25.4	37.4	0.50	40.5	0.61	44.1	0.71	48.0	0.80	49.4	0.83	51.3	0.83	52.7	0.85
		31.7	37.4	0.49	40.5	0.61	44.1	0.69	48.0	0.78	49.4	0.79	51.3	0.82	52.7	0.82
	59	10.1	37.4	0.77	40.5	0.90	44.1	1.05	48.0	1.17	49.4	1.20	51.3	1.23	52.7	1.25
		13.2	37.4	0.75	40.5	0.88	44.1	1.03	48.0	1.15	49.4	1.18	51.3	1.21	52.7	1.23
		25.4	37.4	0.69	40.5	0.82	44.1	0.96	48.0	1.08	49.4	1.11	51.3	1.13	52.7	1.15
		31.7	37.4	0.67	40.5	0.81	44.1	0.94	48.0	1.06	49.4	1.08	51.3	1.11	52.7	1.12
	67	10.1	37.4	0.95	40.5	1.11	44.1	1.28	48.0	1.44	49.4	1.49	51.3	1.51	52.7	1.55
		13.2	37.4	0.93	40.5	1.09	44.1	1.26	48.0	1.42	49.4	1.46	51.3	1.49	52.7	1.52
		25.4	37.4	0.86	40.5	1.01	44.1	1.18	48.0	1.33	49.4	1.36	51.3	1.40	52.7	1.42
		31.7	37.4	0.83	40.5	0.99	44.1	1.16	48.0	1.31	49.4	1.34	51.3	1.37	52.7	1.39
	75	10.1	37.4	1.15	40.5	1.34	44.1	1.57	48.0	1.77	49.4	1.81	51.3	1.85	52.7	1.88
		13.2	37.4	1.13	40.5	1.32	44.1	1.54	48.0	1.74	49.4	1.78	51.3	1.82	52.7	1.85
		25.4	37.4	1.04	40.5	1.24	44.1	1.44	48.0	1.62	49.4	1.66	51.3	1.70	52.7	1.74
		31.7	37.4	1.01	40.5	1.21	44.1	1.41	48.0	1.59	49.4	1.63	51.3	1.67	52.7	1.69
	85	10.1	37.4	1.43	40.5	1.66	44.1	1.93	48.0	2.18	49.4	2.23	51.3	2.28	52.7	2.32
		13.2	37.4	1.40	40.5	1.63	44.1	1.90	48.0	2.14	49.4	2.19	51.3	2.24	52.7	2.28
		25.4	37.4	1.28	40.5	1.52	44.1	1.77	48.0	2.00	49.4	2.04	51.3	2.10	52.7	2.13
		31.7	37.4	1.25	40.5	1.49	44.1	1.74	48.0	1.96	49.4	2.01	51.3	2.06	52.7	2.08
	95	10.1	37.4	1.58	40.5	1.84	44.1	2.15	48.0	2.41	49.4	2.47	51.3	2.53	52.7	2.57
		13.2	37.4	1.55	40.5	1.81	44.1	2.11	48.0	2.37	49.4	2.43	51.3	2.49	52.7	2.53
		25.4	37.4	1.43	40.5	1.69	44.1	1.97	48.0	2.22	49.4	2.27	51.3	2.33	52.7	2.37
		31.7	37.4	1.39	40.5	1.66	44.1	1.93	48.0	2.18	49.4	2.23	51.3	2.29	52.7	2.31
	104	10.1	37.4	1.88	40.5	2.18	44.1	2.54	48.0	2.86	49.4	2.93	51.3	3.00	52.7	3.05
		13.2	37.4	1.84	40.5	2.14	44.1	2.50	48.0	2.81	49.4	2.88	51.3	2.95	52.7	3.00
		25.4	37.4	1.69	40.5	2.00	44.1	2.33	48.0	2.63	49.4	2.69	51.3	2.76	52.7	2.81
		31.7	37.4	1.64	40.5	1.96	44.1	2.29	48.0	2.58	49.4	2.64	51.3	2.71	52.7	2.73
	113	10.1	37.4	2.18	40.5	2.51	44.1	2.94	48.0	3.30	49.4	3.39	51.3	3.47	52.7	3.53
		13.2	37.4	2.13	40.5	2.47	44.1	2.89	48.0	3.25	49.4	3.33	51.3	3.41	52.7	3.47
		25.4	37.4	1.95	40.5	2.31	44.1	2.69	48.0	3.04	49.4	3.11	51.3	3.19	52.7	3.25
		31.7	37.4	1.89	40.5	2.26	44.1	2.65	48.0	2.98	49.4	3.05	51.3	3.13	52.7	3.15

TC = Total Cooling Capacity (MBh).
PI = Power input (KW).
Power input (KW) includes compressor(s) and controls.
Test condition based on 25 feet of equivalent refrigerant piping and no change in elevation between indoor unit and water source unit.

Due to our policy of continuous product innovation, some specifications may change without notification.
©LG Electronics U.S.A., Inc., Englewood Cliffs, NJ. All rights reserved. "LG" is a registered trademark of LG Corp.

PERFORMANCE DATA

Cooling Capacity—ARWB192DA2 / ARWN192DA2 (460 Volt)

Table 14a: Cooling Capacity ARWB192DA2 / ARWN192DA2

Combination Ratio (%) (Capacity index)	Inlet Water Temperature (°F)	Water Flow Rate (gpm)	Indoor Unit Entering Air Wet Bulb Temperature °F													
			57		61		64		67		70		73		76	
			TC MBh	PI kW	TC MBh	PI kW	TC MBh	PI kW	TC MBh	PI kW	TC MBh	PI kW	TC MBh	PI kW	TC MBh	PI kW
130	50	20.2	177.5	3.85	192.2	4.42	209.5	5.10	227.6	5.64	234.4	5.90	243.6	5.99	250.3	6.33
		26.4	177.5	3.78	192.2	4.35	209.5	5.03	227.6	5.60	234.4	5.80	243.6	5.89	250.3	6.20
		50.8	177.5	3.49	192.2	4.06	209.5	4.74	227.6	5.43	234.4	5.41	243.6	5.50	250.3	5.70
		63.4	177.5	3.39	192.2	3.96	209.5	4.75	227.6	5.11	234.4	5.31	243.6	5.51	250.3	5.50
	59	20.2	174.7	5.00	189.2	5.80	206.1	6.70	224.0	7.50	230.7	7.73	239.7	7.93	246.4	8.13
		26.4	174.7	4.90	189.2	5.70	206.1	6.60	224.0	7.40	230.7	7.60	239.7	7.80	246.4	8.00
		50.8	174.7	4.50	189.2	5.30	206.1	6.20	224.0	7.00	230.7	7.10	239.7	7.30	246.4	7.50
		63.4	174.7	4.40	189.2	5.20	206.1	6.10	224.0	6.80	230.7	7.00	239.7	7.20	246.4	7.30
	67	20.2	172.2	6.03	186.5	7.03	203.1	8.13	220.8	9.15	227.4	9.35	236.2	9.65	242.9	9.73
		26.4	172.2	5.90	186.5	6.90	203.1	8.00	220.8	9.00	227.4	9.20	236.2	9.50	242.9	9.60
		50.8	172.2	5.40	186.5	6.40	203.1	7.50	220.8	8.40	227.4	8.60	236.2	8.90	242.9	9.10
		63.4	172.2	5.30	186.5	6.30	203.1	7.30	220.8	8.30	227.4	8.50	236.2	8.70	242.9	8.90
	75	20.2	172.2	7.45	186.5	8.65	203.1	10.08	220.8	11.28	227.4	11.58	236.2	11.88	242.9	12.08
		26.4	172.2	7.30	186.5	8.50	203.1	9.90	220.8	11.10	227.4	11.40	236.2	11.70	242.9	11.90
		50.8	172.2	6.70	186.5	7.90	203.1	9.20	220.8	10.40	227.4	10.70	236.2	11.00	242.9	11.20
		63.4	172.2	6.50	186.5	7.80	203.1	9.10	220.8	10.20	227.4	10.50	236.2	10.70	242.9	10.90
	85	20.2	172.2	8.88	186.5	10.38	203.1	12.10	220.8	13.63	227.4	13.93	236.2	14.23	242.9	14.53
		26.4	172.2	8.70	186.5	10.20	203.1	11.90	220.8	13.40	227.4	13.70	236.2	14.00	242.9	14.30
		50.8	172.2	8.00	186.5	9.50	203.1	11.10	220.8	12.50	227.4	12.80	236.2	13.10	242.9	13.40
		63.4	172.2	7.80	186.5	9.30	203.1	10.90	220.8	12.20	227.4	12.60	236.2	12.90	242.9	13.10
	95	20.2	155.0	8.98	167.8	10.48	182.8	12.20	198.7	13.73	204.7	14.03	212.6	14.43	218.6	14.60
		26.4	155.0	8.80	167.8	10.30	182.8	12.00	198.7	13.50	204.7	13.80	212.6	14.20	218.6	14.40
		50.8	155.0	8.10	167.8	9.60	182.8	11.20	198.7	12.60	204.7	12.90	212.6	13.30	218.6	13.60
		63.4	155.0	7.90	167.8	9.40	182.8	11.00	198.7	12.40	204.7	12.70	212.6	13.00	218.6	13.20
	104	20.2	137.8	9.48	149.2	11.08	162.5	12.93	176.6	14.43	181.9	14.83	189.0	15.13	194.3	15.43
		26.4	137.8	9.30	149.2	10.90	162.5	12.70	176.6	14.20	181.9	14.60	189.0	14.90	194.3	15.20
		50.8	137.8	8.60	149.2	10.20	162.5	11.80	176.6	13.30	181.9	13.70	189.0	14.00	194.3	14.30
		63.4	137.8	8.30	149.2	9.90	162.5	11.60	176.6	13.10	181.9	13.40	189.0	13.70	194.3	14.00
	113	20.2	120.6	9.98	130.6	11.68	142.2	13.65	154.5	15.13	159.1	15.63	165.4	15.83	170.0	16.25
		26.4	120.6	9.80	130.6	11.50	142.2	13.40	154.5	14.90	159.1	15.40	165.4	15.60	170.0	16.00
		50.8	120.6	9.10	130.6	10.80	142.2	12.40	154.5	14.00	159.1	14.50	165.4	14.70	170.0	15.00
		63.4	120.6	8.70	130.6	10.40	142.2	12.20	154.5	13.80	159.1	14.10	165.4	14.40	170.0	14.80
120	50	20.2	168.1	3.65	182.1	4.10	198.3	4.80	215.4	5.34	221.9	5.60	230.7	5.80	237.1	5.79
		26.4	168.1	3.58	182.1	4.05	198.3	4.73	215.4	5.30	221.9	5.50	230.7	5.70	237.1	5.69
		50.8	168.1	3.29	182.1	3.86	198.3	4.44	215.4	5.13	221.9	5.11	230.7	5.31	237.1	5.30
		63.4	168.1	3.19	182.1	3.76	198.3	4.34	215.4	4.81	221.9	5.01	230.7	5.21	237.1	5.31
	59	20.2	166.2	4.80	180.0	5.48	196.0	6.40	213.0	7.20	219.4	7.43	228.0	7.63	234.4	7.73
		26.4	166.2	4.70	180.0	5.40	196.0	6.30	213.0	7.10	219.4	7.30	228.0	7.50	234.4	7.60
		50.8	166.2	4.30	180.0	5.10	196.0	5.90	213.0	6.70	219.4	6.80	228.0	7.00	234.4	7.10
		63.4	166.2	4.20	180.0	5.00	196.0	5.80	213.0	6.50	219.4	6.70	228.0	6.90	234.4	7.00
	67	20.2	164.5	5.83	178.1	6.70	194.0	7.83	210.9	8.85	217.2	9.05	225.6	9.25	232.0	9.45
		26.4	164.5	5.70	178.1	6.60	194.0	7.70	210.9	8.70	217.2	8.90	225.6	9.10	232.0	9.30
		50.8	164.5	5.20	178.1	6.20	194.0	7.20	210.9	8.10	217.2	8.30	225.6	8.50	232.0	8.70
		63.4	164.5	5.10	178.1	6.10	194.0	7.10	210.9	8.00	217.2	8.20	225.6	8.40	232.0	8.50
	75	20.2	164.5	7.15	178.1	8.23	194.0	9.65	210.9	10.88	217.2	11.08	225.6	11.38	232.0	11.58
		26.4	164.5	7.00	178.1	8.10	194.0	9.50	210.9	10.70	217.2	10.90	225.6	11.20	232.0	11.40
		50.8	164.5	6.40	178.1	7.60	194.0	8.90	210.9	10.00	217.2	10.20	225.6	10.50	232.0	10.70
		63.4	164.5	6.20	178.1	7.40	194.0	8.70	210.9	9.80	217.2	10.00	225.6	10.30	232.0	10.40
	85	20.2	164.5	8.55	178.1	9.95	194.0	11.70	210.9	13.10	217.2	13.40	225.6	13.70	232.0	14.03
		26.4	164.5	8.40	178.1	9.80	194.0	11.50	210.9	12.90	217.2	13.20	225.6	13.50	232.0	13.80
		50.8	164.5	7.80	178.1	9.20	194.0	10.70	210.9	12.10	217.2	12.40	225.6	12.70	232.0	12.90
		63.4	164.5	7.50	178.1	9.00	194.0	10.50	210.9	11.80	217.2	12.10	225.6	12.40	232.0	12.60
	95	20.2	150.5	8.78	163.0	10.28	177.5	11.88	193.0	13.40	198.8	13.70	206.5	14.13	212.3	14.33
		26.4	150.5	8.60	163.0	10.10	177.5	11.70	193.0	13.20	198.8	13.50	206.5	13.90	212.3	14.10
		50.8	150.5	7.90	163.0	9.40	177.5	11.00	193.0	12.40	198.8	12.70	206.5	13.00	212.3	13.20
		63.4	150.5	7.70	163.0	9.20	177.5	10.80	193.0	12.10	198.8	12.40	206.5	12.70	212.3	12.90
	104	20.2	136.6	9.48	147.9	10.98	161.1	12.80	175.1	14.43	180.3	14.85	187.3	15.13	192.6	15.43
		26.4	136.6	9.30	147.9	10.80	161.1	12.60	175.1	14.20	180.3	14.60	187.3	14.90	192.6	15.20
		50.8	136.6	8.60	147.9	10.10	161.1	11.80	175.1	13.30	180.3	13.60	187.3	14.00	192.6	14.30
		63.4	136.6	8.30	147.9	9.90	161.1	11.60	175.1	13.00	180.3	13.40	187.3	13.70	192.6	13.90
	113	20.2	122.7	10.18	132.8	11.68	144.7	13.73	157.2	15.45	161.8	16.00	168.1	16.13	172.9	16.53
		26.4	122.7	10.00	132.8	11.50	144.7	13.50	157.2	15.20	161.8	15.70	168.1	15.90	172.9	16.30
		50.8	122.7	9.30	132.8	10.80	144.7	12.60	157.2	14.20	161.8	14.50	168.1	15.00	172.9	15.40
		63.4	122.7	8.90	132.8	10.60	144.7	12.40	157.2	13.90	161.8	14.40	168.1	14.70	172.9	14.90

TC = Total Cooling Capacity (MBh).
PI = Power input (KW).
Power input (KW) includes compressor(s) and controls.
Test condition based on 25 feet of equivalent refrigerant piping and no change in elevation between indoor unit and water source unit.

LG
Due to our policy of continuous product innovation, some specifications may change without notification.
©LG Electronics U.S.A., Inc., Englewood Cliffs, NJ. All rights reserved. "LG" is a registered trademark of LG Corp.

PERFORMANCE DATA

Cooling Capacity—ARWB192DA2 / ARWN192DA2 (460 Volt)

Table 14b: Cooling Capacity ARWB192DA2 / ARWN192DA2

Combination Ratio (%) (Capacity index)	Inlet Water Temperature (°F)	Water Flow Rate (gpm)	Indoor Unit Entering Air Wet Bulb Temperature °F													
			57		61		64		67		70		73		76	
			TC MBh	PI kW	TC MBh	PI kW	TC MBh	PI kW	TC MBh	PI kW	TC MBh	PI kW	TC MBh	PI kW	TC MBh	PI kW
110	50	20.2	158.5	3.32	171.7	3.92	187.0	4.50	203.3	5.19	209.3	5.44	217.4	5.37	223.7	5.60
		26.4	158.5	3.28	171.7	3.85	187.0	4.43	203.3	5.11	209.3	5.31	217.4	5.30	223.7	5.50
		50.8	158.5	3.09	171.7	3.56	187.0	4.14	203.3	4.83	209.3	4.81	217.4	5.01	223.7	5.11
		63.4	158.5	2.99	171.7	3.46	187.0	4.04	203.3	4.63	209.3	4.83	217.4	5.03	223.7	4.91
	59	20.2	157.6	4.48	170.7	5.30	185.9	6.10	202.1	6.90	208.1	7.13	216.2	7.20	222.3	7.43
		26.4	157.6	4.40	170.7	5.20	185.9	6.00	202.1	6.80	208.1	7.00	216.2	7.10	222.3	7.30
		50.8	157.6	4.10	170.7	4.80	185.9	5.60	202.1	6.40	208.1	6.50	216.2	6.70	222.3	6.80
		63.4	157.6	4.00	170.7	4.70	185.9	5.50	202.1	6.20	208.1	6.40	216.2	6.60	222.3	6.60
	67	20.2	156.8	5.50	169.8	6.53	184.9	7.53	201.0	8.43	207.0	8.63	215.1	8.83	221.1	9.05
		26.4	156.8	5.40	169.8	6.40	184.9	7.40	201.0	8.30	207.0	8.50	215.1	8.70	221.1	8.90
		50.8	156.8	5.00	169.8	5.90	184.9	6.90	201.0	7.80	207.0	8.00	215.1	8.20	221.1	8.30
		63.4	156.8	4.90	169.8	5.80	184.9	6.80	201.0	7.60	207.0	7.80	215.1	8.00	221.1	8.10
	75	20.2	156.8	6.85	169.8	7.93	184.9	9.25	201.0	10.38	207.0	10.55	215.1	10.88	221.1	11.08
		26.4	156.8	6.70	169.8	7.80	184.9	9.10	201.0	10.20	207.0	10.40	215.1	10.70	221.1	10.90
		50.8	156.8	6.10	169.8	7.30	184.9	8.50	201.0	9.50	207.0	9.80	215.1	10.00	221.1	10.20
		63.4	156.8	6.00	169.8	7.10	184.9	8.30	201.0	9.40	207.0	9.60	215.1	9.80	221.1	10.00
	85	20.2	156.8	8.25	169.8	9.65	184.9	11.18	201.0	12.60	207.0	12.90	215.1	13.20	221.1	13.53
		26.4	156.8	8.10	169.8	9.50	184.9	11.00	201.0	12.40	207.0	12.70	215.1	13.00	221.1	13.30
		50.8	156.8	7.50	169.8	8.90	184.9	10.30	201.0	11.60	207.0	11.90	215.1	12.20	221.1	12.40
		63.4	156.8	7.30	169.8	8.70	184.9	10.10	201.0	11.40	207.0	11.70	215.1	12.00	221.1	12.10
	95	20.2	146.1	8.68	158.2	10.08	172.3	11.70	187.3	13.10	192.9	13.40	200.4	13.83	206.0	14.03
		26.4	146.1	8.50	158.2	9.90	172.3	11.50	187.3	12.90	192.9	13.20	200.4	13.60	206.0	13.80
		50.8	146.1	7.80	158.2	9.20	172.3	10.70	187.3	12.10	192.9	12.40	200.4	12.70	206.0	12.90
		63.4	146.1	7.60	158.2	9.00	172.3	10.50	187.3	11.90	192.9	12.20	200.4	12.50	206.0	12.60
	104	20.2	135.4	9.50	146.6	10.98	159.7	12.80	173.5	14.43	178.7	14.73	185.7	15.13	190.9	15.45
		26.4	135.4	9.30	146.6	10.80	159.7	12.60	173.5	14.20	178.7	14.50	185.7	14.90	190.9	15.20
		50.8	135.4	8.50	146.6	10.10	159.7	11.80	173.5	13.30	178.7	13.60	185.7	14.00	190.9	14.20
		63.4	135.4	8.30	146.6	9.90	159.7	11.60	173.5	13.00	178.7	13.40	185.7	13.70	190.9	13.90
	113	20.2	124.7	10.33	135.0	11.88	147.1	13.90	159.7	15.75	164.5	16.05	171.0	16.43	175.8	16.88
		26.4	124.7	10.10	135.0	11.70	147.1	13.70	159.7	15.50	164.5	15.80	171.0	16.20	175.8	16.60
		50.8	124.7	9.20	135.0	11.00	147.1	12.90	159.7	14.50	164.5	14.80	171.0	15.30	175.8	15.50
		63.4	124.7	9.00	135.0	10.80	147.1	12.70	159.7	14.10	164.5	14.60	171.0	14.90	175.8	15.20
100	50	20.2	149.1	3.12	161.4	3.60	175.8	4.14	191.1	4.89	196.8	4.84	204.5	5.04	210.2	5.17
		26.4	149.1	3.08	161.4	3.55	175.8	4.13	191.1	4.81	196.8	4.80	204.5	5.00	210.2	5.10
		50.8	149.1	2.89	161.4	3.36	175.8	4.05	191.1	4.53	196.8	4.63	204.5	4.83	210.2	4.81
		63.4	149.1	2.79	161.4	3.26	175.8	3.95	191.1	4.33	196.8	4.53	204.5	4.51	210.2	4.61
	59	20.2	149.1	4.28	161.4	4.98	175.8	5.78	191.1	6.60	196.8	6.70	204.5	6.90	210.2	7.00
		26.4	149.1	4.20	161.4	4.90	175.8	5.70	191.1	6.50	196.8	6.60	204.5	6.80	210.2	6.90
		50.8	149.1	3.90	161.4	4.60	175.8	5.40	191.1	6.10	196.8	6.20	204.5	6.40	210.2	6.50
		63.4	149.1	3.80	161.4	4.50	175.8	5.30	191.1	5.90	196.8	6.10	204.5	6.20	210.2	6.30
	67	20.2	149.1	5.30	161.4	6.20	175.8	7.23	191.1	8.13	196.8	8.35	204.5	8.55	210.2	8.63
		26.4	149.1	5.20	161.4	6.10	175.8	7.10	191.1	8.00	196.8	8.20	204.5	8.40	210.2	8.50
		50.8	149.1	4.80	161.4	5.70	175.8	6.60	191.1	7.50	196.8	7.60	204.5	7.80	210.2	8.00
		63.4	149.1	4.70	161.4	5.60	175.8	6.50	191.1	7.30	196.8	7.50	204.5	7.70	210.2	7.80
	75	20.2	149.1	6.53	161.4	7.53	175.8	8.73	191.1	9.85	196.8	10.18	204.5	10.35	210.2	10.58
		26.4	149.1	6.40	161.4	7.40	175.8	8.60	191.1	9.70	196.8	10.00	204.5	10.20	210.2	10.40
		50.8	149.1	5.90	161.4	6.90	175.8	8.10	191.1	9.10	196.8	9.30	204.5	9.60	210.2	9.70
		63.4	149.1	5.70	161.4	6.80	175.8	7.90	191.1	8.90	196.8	9.10	204.5	9.40	210.2	9.50
	85	20.2	149.1	7.95	161.4	9.25	175.8	10.78	191.1	12.20	196.8	12.50	204.5	12.80	210.2	13.00
		26.4	149.1	7.80	161.4	9.10	175.8	10.60	191.1	12.00	196.8	12.30	204.5	12.60	210.2	12.80
		50.8	149.1	7.20	161.4	8.50	175.8	9.90	191.1	11.20	196.8	11.50	204.5	11.80	210.2	12.00
		63.4	149.1	7.00	161.4	8.40	175.8	9.70	191.1	11.00	196.8	11.30	204.5	11.50	210.2	11.70
	95	20.2	141.6	8.48	153.4	9.75	167.0	11.38	181.5	12.80	187.0	13.10	194.3	13.53	199.7	13.73
		26.4	141.6	8.30	153.4	9.60	167.0	11.20	181.5	12.60	187.0	12.90	194.3	13.30	199.7	13.50
		50.8	141.6	7.60	153.4	9.00	167.0	10.50	181.5	11.80	187.0	12.10	194.3	12.40	199.7	12.60
		63.4	141.6	7.40	153.4	8.80	167.0	10.30	181.5	11.60	187.0	11.90	194.3	12.20	199.7	12.30
	104	20.2	134.2	9.50	145.3	10.98	158.2	12.80	172.0	14.43	177.1	14.73	184.0	15.15	189.2	15.33
		26.4	134.2	9.30	145.3	10.80	158.2	12.60	172.0	14.20	177.1	14.50	184.0	14.90	189.2	15.10
		50.8	134.2	8.50	145.3	10.10	158.2	11.80	172.0	13.30	177.1	13.60	184.0	13.90	189.2	14.20
		63.4	134.2	8.30	145.3	9.90	158.2	11.50	172.0	13.00	177.1	13.30	184.0	13.70	189.2	13.80
	113	20.2	126.8	10.53	137.2	12.20	149.4	14.23	162.5	16.05	167.2	16.35	173.7	16.78	178.7	16.93
		26.4	126.8	10.30	137.2	12.00	149.4	14.00	162.5	15.80	167.2	16.10	173.7	16.50	178.7	16.70
		50.8	126.8	9.40	137.2	11.20	149.4	13.10	162.5	14.80	167.2	15.10	173.7	15.40	178.7	15.80
		63.4	126.8	9.20	137.2	11.00	149.4	12.70	162.5	14.40	167.2	14.70	173.7	15.20	178.7	15.30

TC = Total Cooling Capacity (MBh).
PI = Power input (KW).
Power input (KW) includes compressor(s) and controls.
Test condition based on 25 feet of equivalent refrigerant piping and no change in elevation between indoor unit and water source unit.

Due to our policy of continuous product innovation, some specifications may change without notification.
©LG Electronics U.S.A., Inc., Englewood Cliffs, NJ. All rights reserved. "LG" is a registered trademark of LG Corp.

PERFORMANCE DATA

Cooling Capacity—ARWB192DA2 / ARWN192DA2 (460 Volt)

Table 14c: Cooling Capacity ARWB192DA2 / ARWN192DA2

Combination Ratio (%) (Capacity index)	Inlet Water Temperature (°F)	Water Flow Rate (gpm)	Indoor Unit Entering Air Wet Bulb Temperature °F													
			57		61		64		67		70		73		76	
			TC MBh	PI kW	TC MBh	PI kW	TC MBh	PI kW	TC MBh	PI kW	TC MBh	PI kW	TC MBh	PI kW	TC MBh	PI kW
90	50	20.2	134.2	2.58	145.3	3.10	158.2	3.60	172.0	4.21	177.1	4.34	184.0	4.24	189.2	4.64
		26.4	134.2	2.59	145.3	3.08	158.2	3.55	172.0	4.14	177.1	4.24	184.0	4.23	189.2	4.54
		50.8	134.2	2.61	145.3	2.99	158.2	3.36	172.0	3.85	177.1	3.84	184.0	4.15	189.2	4.14
		63.4	134.2	2.51	145.3	2.89	158.2	3.26	172.0	3.75	177.1	3.74	184.0	4.05	189.2	3.94
	59	20.2	134.2	3.65	145.3	4.25	158.2	4.98	172.0	5.70	177.1	5.80	184.0	5.88	189.2	6.10
		26.4	134.2	3.60	145.3	4.20	158.2	4.90	172.0	5.60	177.1	5.70	184.0	5.80	189.2	6.00
		50.8	134.2	3.40	145.3	4.00	158.2	4.60	172.0	5.20	177.1	5.30	184.0	5.50	189.2	5.60
		63.4	134.2	3.30	145.3	3.90	158.2	4.50	172.0	5.10	177.1	5.20	184.0	5.40	189.2	5.40
	67	20.2	134.2	4.60	145.3	5.28	158.2	6.20	172.0	7.03	177.1	7.10	184.0	7.33	189.2	7.40
		26.4	134.2	4.50	145.3	5.20	158.2	6.10	172.0	6.90	177.1	7.00	184.0	7.20	189.2	7.30
		50.8	134.2	4.10	145.3	4.90	158.2	5.70	172.0	6.40	177.1	6.60	184.0	6.70	189.2	6.90
		63.4	134.2	4.00	145.3	4.80	158.2	5.60	172.0	6.30	177.1	6.50	184.0	6.60	189.2	6.70
	75	20.2	134.2	5.63	145.3	6.50	158.2	7.50	172.0	8.55	177.1	8.75	184.0	8.95	189.2	9.15
		26.4	134.2	5.50	145.3	6.40	158.2	7.40	172.0	8.40	177.1	8.60	184.0	8.80	189.2	9.00
		50.8	134.2	5.00	145.3	6.00	158.2	7.00	172.0	7.80	177.1	8.00	184.0	8.20	189.2	8.40
		63.4	134.2	4.90	145.3	5.80	158.2	6.80	172.0	7.70	177.1	7.90	184.0	8.10	189.2	8.20
	85	20.2	134.2	6.83	145.3	8.05	158.2	9.35	172.0	10.48	177.1	10.78	184.0	10.98	189.2	11.18
		26.4	134.2	6.70	145.3	7.90	158.2	9.20	172.0	10.30	177.1	10.60	184.0	10.80	189.2	11.00
		50.8	134.2	6.20	145.3	7.30	158.2	8.60	172.0	9.60	177.1	9.90	184.0	10.10	189.2	10.30
		63.4	134.2	6.00	145.3	7.20	158.2	8.40	172.0	9.50	177.1	9.70	184.0	9.90	189.2	10.00
	95	20.2	130.4	7.45	141.2	8.65	153.8	10.08	167.2	11.28	172.2	11.60	178.9	11.90	183.9	12.10
		26.4	130.4	7.30	141.2	8.50	153.8	9.90	167.2	11.10	172.2	11.40	178.9	11.70	183.9	11.90
		50.8	130.4	6.70	141.2	7.90	153.8	9.20	167.2	10.40	172.2	10.60	178.9	10.90	183.9	11.10
		63.4	130.4	6.50	141.2	7.80	153.8	9.00	167.2	10.20	172.2	10.50	178.9	10.70	183.9	10.80
	104	20.2	126.7	8.58	137.2	9.85	149.4	11.48	162.4	13.03	167.3	13.33	173.8	13.63	178.7	13.80
		26.4	126.7	8.40	137.2	9.70	149.4	11.30	162.4	12.80	167.3	13.10	173.8	13.40	178.7	13.60
		50.8	126.7	7.70	137.2	9.10	149.4	10.60	162.4	11.90	167.3	12.20	173.8	12.50	178.7	12.80
		63.4	126.7	7.50	137.2	8.90	149.4	10.40	162.4	11.70	167.3	12.00	173.8	12.30	178.7	12.40
	113	20.2	123.0	9.70	133.2	11.05	145.0	12.88	157.6	14.78	162.4	15.05	168.7	15.35	173.5	15.50
		26.4	123.0	9.50	133.2	10.90	145.0	12.70	157.6	14.50	162.4	14.80	168.7	15.10	173.5	15.30
		50.8	123.0	8.70	133.2	10.30	145.0	12.00	157.6	13.40	162.4	13.80	168.7	14.10	173.5	14.50
		63.4	123.0	8.50	133.2	10.00	145.0	11.80	157.6	13.20	162.4	13.50	168.7	13.90	173.5	14.00
80	50	20.2	119.2	2.39	129.1	2.78	140.6	3.00	152.9	3.51	157.5	3.61	163.6	3.74	168.2	3.70
		26.4	119.2	2.31	129.1	2.70	140.6	2.98	152.9	3.46	157.5	3.56	163.6	3.66	168.2	3.65
		50.8	119.2	2.01	129.1	2.40	140.6	2.89	152.9	3.28	157.5	3.38	163.6	3.36	168.2	3.46
		63.4	119.2	1.91	129.1	2.51	140.6	2.79	152.9	3.18	157.5	3.28	163.6	3.26	168.2	3.26
	59	20.2	119.2	3.18	129.1	3.68	140.6	4.15	152.9	4.78	157.5	4.88	163.6	4.98	168.2	5.08
		26.4	119.2	3.10	129.1	3.60	140.6	4.10	152.9	4.70	157.5	4.80	163.6	4.90	168.2	5.00
		50.8	119.2	2.80	129.1	3.30	140.6	3.90	152.9	4.40	157.5	4.50	163.6	4.60	168.2	4.70
		63.4	119.2	2.70	129.1	3.30	140.6	3.80	152.9	4.30	157.5	4.40	163.6	4.50	168.2	4.50
	67	20.2	119.2	3.88	129.1	4.48	140.6	5.18	152.9	5.90	157.5	6.00	163.6	6.08	168.2	6.30
		26.4	119.2	3.80	129.1	4.40	140.6	5.10	152.9	5.80	157.5	5.90	163.6	6.00	168.2	6.20
		50.8	119.2	3.50	129.1	4.10	140.6	4.80	152.9	5.40	157.5	5.50	163.6	5.70	168.2	5.80
		63.4	119.2	3.40	129.1	4.00	140.6	4.70	152.9	5.30	157.5	5.40	163.6	5.60	168.2	5.60
	75	20.2	119.2	4.70	129.1	5.50	140.6	6.30	152.9	7.10	157.5	7.33	163.6	7.53	168.2	7.63
		26.4	119.2	4.60	129.1	5.40	140.6	6.20	152.9	7.00	157.5	7.20	163.6	7.40	168.2	7.50
		50.8	119.2	4.20	129.1	5.00	140.6	5.80	152.9	6.60	157.5	6.70	163.6	6.90	168.2	7.00
		63.4	119.2	4.10	129.1	4.90	140.6	5.70	152.9	6.40	157.5	6.60	163.6	6.80	168.2	6.80
	85	20.2	119.2	5.70	129.1	6.70	140.6	7.83	152.9	8.73	157.5	8.93	163.6	9.25	168.2	9.35
		26.4	119.2	5.60	129.1	6.60	140.6	7.70	152.9	8.60	157.5	8.80	163.6	9.10	168.2	9.20
		50.8	119.2	5.20	129.1	6.20	140.6	7.20	152.9	8.10	157.5	8.30	163.6	8.50	168.2	8.60
		63.4	119.2	5.10	129.1	6.00	140.6	7.00	152.9	7.90	157.5	8.10	163.6	8.30	168.2	8.40
	95	20.2	119.2	6.43	129.1	7.43	140.6	8.63	152.9	9.75	157.5	9.95	163.6	10.28	168.2	10.48
		26.4	119.2	6.30	129.1	7.30	140.6	8.50	152.9	9.60	157.5	9.80	163.6	10.10	168.2	10.30
		50.8	119.2	5.80	129.1	6.80	140.6	8.00	152.9	9.00	157.5	9.20	163.6	9.40	168.2	9.60
		63.4	119.2	5.60	129.1	6.70	140.6	7.80	152.9	8.80	157.5	9.00	163.6	9.30	168.2	9.30
	104	20.2	119.2	7.55	129.1	8.85	140.6	10.28	152.9	11.60	157.5	11.78	163.6	12.08	168.2	12.28
		26.4	119.2	7.40	129.1	8.70	140.6	10.10	152.9	11.40	157.5	11.60	163.6	11.90	168.2	12.10
		50.8	119.2	6.80	129.1	8.10	140.6	9.40	152.9	10.60	157.5	10.90	163.6	11.20	168.2	11.40
		63.4	119.2	6.60	129.1	7.90	140.6	9.20	152.9	10.40	157.5	10.70	163.6	11.00	168.2	11.10
	113	20.2	119.2	8.68	129.1	10.28	140.6	11.93	152.9	13.45	157.5	13.60	163.6	13.88	168.2	14.08
		26.4	119.2	8.50	129.1	10.10	140.6	11.70	152.9	13.20	157.5	13.40	163.6	13.70	168.2	13.90
		50.8	119.2	7.80	129.1	9.40	140.6	10.80	152.9	12.20	157.5	12.60	163.6	13.00	168.2	13.20
		63.4	119.2	7.60	129.1	9.10	140.6	10.60	152.9	12.00	157.5	12.40	163.6	12.70	168.2	12.90

TC = Total Cooling Capacity (MBh).
PI = Power input (KW).
Power input (KW) includes compressor(s) and controls.
Test condition based on 25 feet of equivalent refrigerant piping and no change in elevation between indoor unit and water source unit.

Due to our policy of continuous product innovation, some specifications may change without notification.
©LG Electronics U.S.A., Inc., Englewood Cliffs, NJ. All rights reserved. "LG" is a registered trademark of LG Corp.

PERFORMANCE DATA

Cooling Capacity—ARWB192DA2 / ARWN192DA2 (460 Volt)

Table 14d: Cooling Capacity ARWB192DA2 / ARWN192DA2

Combination Ratio (%) (Capacity index)	Inlet Water Temperature (°F)	Water Flow Rate (gpm)	Indoor Unit Entering Air Wet Bulb Temperature °F													
			57		61		64		67		70		73		76	
			TC MBh	PI kW	TC MBh	PI kW	TC MBh	PI kW	TC MBh	PI kW	TC MBh	PI kW	TC MBh	PI kW	TC MBh	PI kW
70	50	20.2	104.3	1.88	113.0	2.23	123.1	2.41	133.8	2.96	137.8	3.06	143.1	3.16	147.1	3.00
		26.4	104.3	1.83	113.0	2.21	123.1	2.39	133.8	2.89	137.8	2.99	143.1	3.09	147.1	2.98
		50.8	104.3	1.63	113.0	2.13	123.1	2.30	133.8	2.59	137.8	2.69	143.1	2.79	147.1	2.89
		63.4	104.3	1.74	113.0	2.03	123.1	2.41	133.8	2.70	137.8	2.59	143.1	2.69	147.1	2.79
	59	20.2	104.3	2.55	113.0	3.05	123.1	3.45	133.8	3.98	137.8	4.08	143.1	4.18	147.1	4.15
		26.4	104.3	2.50	113.0	3.00	123.1	3.40	133.8	3.90	137.8	4.00	143.1	4.10	147.1	4.10
		50.8	104.3	2.30	113.0	2.80	123.1	3.20	133.8	3.60	137.8	3.70	143.1	3.80	147.1	3.90
		63.4	104.3	2.30	113.0	2.70	123.1	3.20	133.8	3.60	137.8	3.60	143.1	3.70	147.1	3.80
	67	20.2	104.3	3.15	113.0	3.78	123.1	4.38	133.8	4.88	137.8	4.98	143.1	5.08	147.1	5.18
		26.4	104.3	3.10	113.0	3.70	123.1	4.30	133.8	4.80	137.8	4.90	143.1	5.00	147.1	5.10
		50.8	104.3	2.90	113.0	3.40	123.1	4.00	133.8	4.50	137.8	4.60	143.1	4.70	147.1	4.80
		63.4	104.3	2.80	113.0	3.30	123.1	3.90	133.8	4.40	137.8	4.50	143.1	4.60	147.1	4.70
	75	20.2	104.3	3.88	113.0	4.58	123.1	5.28	133.8	5.88	137.8	6.10	143.1	6.20	147.1	6.30
		26.4	104.3	3.80	113.0	4.50	123.1	5.20	133.8	5.80	137.8	6.00	143.1	6.10	147.1	6.20
		50.8	104.3	3.50	113.0	4.20	123.1	4.90	133.8	5.50	137.8	5.60	143.1	5.70	147.1	5.80
		63.4	104.3	3.40	113.0	4.10	123.1	4.80	133.8	5.40	137.8	5.50	143.1	5.60	147.1	5.70
	85	20.2	104.3	4.80	113.0	5.60	123.1	6.50	133.8	7.33	137.8	7.53	143.1	7.60	147.1	7.83
		26.4	104.3	4.70	113.0	5.50	123.1	6.40	133.8	7.20	137.8	7.40	143.1	7.50	147.1	7.70
		50.8	104.3	4.30	113.0	5.10	123.1	6.00	133.8	6.70	137.8	6.90	143.1	7.10	147.1	7.20
		63.4	104.3	4.20	113.0	5.00	123.1	5.80	133.8	6.60	137.8	6.80	143.1	6.90	147.1	7.00
	95	20.2	104.3	5.30	113.0	6.20	123.1	7.23	133.8	8.13	137.8	8.35	143.1	8.55	147.1	8.63
		26.4	104.3	5.20	113.0	6.10	123.1	7.10	133.8	8.00	137.8	8.20	143.1	8.40	147.1	8.50
		50.8	104.3	4.80	113.0	5.70	123.1	6.60	133.8	7.50	137.8	7.60	143.1	7.80	147.1	8.00
		63.4	104.3	4.70	113.0	5.60	123.1	6.50	133.8	7.30	137.8	7.50	143.1	7.70	147.1	7.80
	104	20.2	104.3	6.33	113.0	7.33	123.1	8.53	133.8	9.68	137.8	9.85	143.1	10.05	147.1	10.25
		26.4	104.3	6.20	113.0	7.20	123.1	8.40	133.8	9.50	137.8	9.70	143.1	9.90	147.1	10.10
		50.8	104.3	5.70	113.0	6.70	123.1	7.90	133.8	8.80	137.8	9.10	143.1	9.30	147.1	9.50
		63.4	104.3	5.50	113.0	6.60	123.1	7.70	133.8	8.70	137.8	8.90	143.1	9.10	147.1	9.20
	113	20.2	104.3	7.35	113.0	8.45	123.1	9.83	133.8	11.23	137.8	11.35	143.1	11.55	147.1	11.88
		26.4	104.3	7.20	113.0	8.30	123.1	9.70	133.8	11.00	137.8	11.20	143.1	11.40	147.1	11.70
		50.8	104.3	6.60	113.0	7.70	123.1	9.20	133.8	10.10	137.8	10.60	143.1	10.80	147.1	11.00
		63.4	104.3	6.30	113.0	7.60	123.1	8.90	133.8	10.10	137.8	10.30	143.1	10.50	147.1	10.60
60	50	20.2	89.4	1.43	96.9	1.89	105.5	1.91	114.7	2.36	118.1	2.46	122.7	2.32	126.1	2.42
		26.4	89.4	1.44	96.9	1.84	105.5	1.91	114.7	2.31	118.1	2.41	122.7	2.30	126.1	2.40
		50.8	89.4	1.45	96.9	1.64	105.5	1.93	114.7	2.11	118.1	2.21	122.7	2.21	126.1	2.31
		63.4	89.4	1.35	96.9	1.64	105.5	1.83	114.7	2.01	118.1	2.11	122.7	2.21	126.1	2.21
	59	20.2	89.4	2.03	96.9	2.45	105.5	2.73	114.7	3.15	118.1	3.25	122.7	3.25	126.1	3.35
		26.4	89.4	2.00	96.9	2.40	105.5	2.70	114.7	3.10	118.1	3.20	122.7	3.20	126.1	3.30
		50.8	89.4	1.90	96.9	2.20	105.5	2.60	114.7	2.90	118.1	3.00	122.7	3.00	126.1	3.10
		63.4	89.4	1.80	96.9	2.20	105.5	2.50	114.7	2.80	118.1	2.90	122.7	3.00	126.1	3.00
	67	20.2	89.4	2.55	96.9	2.95	105.5	3.45	114.7	3.85	118.1	3.95	122.7	4.08	126.1	4.18
		26.4	89.4	2.50	96.9	2.90	105.5	3.40	114.7	3.80	118.1	3.90	122.7	4.00	126.1	4.10
		50.8	89.4	2.30	96.9	2.70	105.5	3.20	114.7	3.60	118.1	3.70	122.7	3.70	126.1	3.80
		63.4	89.4	2.20	96.9	2.70	105.5	3.10	114.7	3.50	118.1	3.60	122.7	3.70	126.1	3.70
	75	20.2	89.4	3.05	96.9	3.68	105.5	4.15	114.7	4.78	118.1	4.88	122.7	4.98	126.1	5.08
		26.4	89.4	3.00	96.9	3.60	105.5	4.10	114.7	4.70	118.1	4.80	122.7	4.90	126.1	5.00
		50.8	89.4	2.80	96.9	3.30	105.5	3.90	114.7	4.40	118.1	4.50	122.7	4.60	126.1	4.70
		63.4	89.4	2.70	96.9	3.20	105.5	3.80	114.7	4.30	118.1	4.40	122.7	4.50	126.1	4.50
	85	20.2	89.4	3.78	96.9	4.48	105.5	5.18	114.7	5.78	118.1	6.00	122.7	6.10	126.1	6.20
		26.4	89.4	3.70	96.9	4.40	105.5	5.10	114.7	5.70	118.1	5.90	122.7	6.00	126.1	6.10
		50.8	89.4	3.40	96.9	4.10	105.5	4.80	114.7	5.40	118.1	5.50	122.7	5.60	126.1	5.70
		63.4	89.4	3.30	96.9	4.00	105.5	4.70	114.7	5.30	118.1	5.40	122.7	5.50	126.1	5.60
	95	20.2	89.4	4.30	96.9	5.00	105.5	5.80	114.7	6.50	118.1	6.60	122.7	6.83	126.1	6.90
		26.4	89.4	4.20	96.9	4.90	105.5	5.70	114.7	6.40	118.1	6.50	122.7	6.70	126.1	6.80
		50.8	89.4	3.80	96.9	4.50	105.5	5.30	114.7	6.00	118.1	6.10	122.7	6.20	126.1	6.40
		63.4	89.4	3.70	96.9	4.40	105.5	5.20	114.7	5.80	118.1	6.00	122.7	6.10	126.1	6.20
	104	20.2	89.4	5.00	96.9	5.78	105.5	6.80	114.7	7.63	118.1	7.83	122.7	8.03	126.1	8.25
		26.4	89.4	4.90	96.9	5.70	105.5	6.70	114.7	7.50	118.1	7.70	122.7	7.90	126.1	8.10
		50.8	89.4	4.50	96.9	5.40	105.5	6.30	114.7	7.00	118.1	7.20	122.7	7.40	126.1	7.50
		63.4	89.4	4.40	96.9	5.30	105.5	6.10	114.7	6.90	118.1	7.10	122.7	7.30	126.1	7.30
	113	20.2	89.4	5.70	96.9	6.55	105.5	7.80	114.7	8.75	118.1	9.05	122.7	9.23	126.1	9.60
		26.4	89.4	5.60	96.9	6.50	105.5	7.70	114.7	8.60	118.1	8.90	122.7	9.10	126.1	9.40
		50.8	89.4	5.20	96.9	6.30	105.5	7.30	114.7	8.00	118.1	8.30	122.7	8.60	126.1	8.60
		63.4	89.4	5.10	96.9	6.20	105.5	7.00	114.7	8.00	118.1	8.20	122.7	8.50	126.1	8.40

TC = Total Cooling Capacity (MBh).
PI = Power input (KW).
Power input (KW) includes compressor(s) and controls.
Test condition based on 25 feet of equivalent refrigerant piping and no change in elevation between indoor unit and water source unit.

Due to our policy of continuous product innovation, some specifications may change without notification.
©LG Electronics U.S.A., Inc., Englewood Cliffs, NJ. All rights reserved. "LG" is a registered trademark of LG Corp.

PERFORMANCE DATA

Cooling Capacity—ARWB192DA2 / ARWN192DA2 (460 Volt)

Table 14e: Cooling Capacity ARWB192DA2 / ARWN192DA2

Combination Ratio (%) (Capacity index)	Inlet Water Temperature (°F)	Water Flow Rate (gpm)	Indoor Unit Entering Air Wet Bulb Temperature °F													
			57		61		64		67		70		73		76	
			TC MBh	PI kW	TC MBh	PI kW	TC MBh	PI kW	TC MBh	PI kW	TC MBh	PI kW	TC MBh	PI kW	TC MBh	PI kW
50	50	20.2	74.5	1.05	80.7	1.40	87.9	1.73	95.6	1.76	98.4	1.89	102.2	1.72	105.1	1.99
		26.4	74.5	1.05	80.7	1.35	87.9	1.65	95.6	1.74	98.4	1.84	102.2	1.73	105.1	1.94
		50.8	74.5	1.06	80.7	1.15	87.9	1.34	95.6	1.64	98.4	1.64	102.2	1.74	105.1	1.74
		63.4	74.5	0.85	80.7	1.15	87.9	1.45	95.6	1.54	98.4	1.64	102.2	1.64	105.1	1.53
	59	20.2	74.5	1.53	80.7	1.85	87.9	2.15	95.6	2.33	98.4	2.45	102.2	2.43	105.1	2.55
		26.4	74.5	1.50	80.7	1.80	87.9	2.10	95.6	2.30	98.4	2.40	102.2	2.40	105.1	2.50
		50.8	74.5	1.40	80.7	1.60	87.9	1.90	95.6	2.20	98.4	2.20	102.2	2.30	105.1	2.30
		63.4	74.5	1.30	80.7	1.60	87.9	1.90	95.6	2.10	98.4	2.20	102.2	2.20	105.1	2.20
	67	20.2	74.5	1.95	80.7	2.25	87.9	2.53	95.6	2.83	98.4	2.95	102.2	3.05	105.1	3.05
		26.4	74.5	1.90	80.7	2.20	87.9	2.50	95.6	2.80	98.4	2.90	102.2	3.00	105.1	3.00
		50.8	74.5	1.70	80.7	2.00	87.9	2.40	95.6	2.70	98.4	2.70	102.2	2.80	105.1	2.80
		63.4	74.5	1.70	80.7	2.00	87.9	2.30	95.6	2.60	98.4	2.70	102.2	2.70	105.1	2.80
	75	20.2	74.5	2.35	80.7	2.63	87.9	3.15	95.6	3.58	98.4	3.68	102.2	3.65	105.1	3.75
		26.4	74.5	2.30	80.7	2.60	87.9	3.10	95.6	3.50	98.4	3.60	102.2	3.60	105.1	3.70
		50.8	74.5	2.10	80.7	2.50	87.9	2.90	95.6	3.20	98.4	3.30	102.2	3.40	105.1	3.50
		63.4	74.5	2.00	80.7	2.40	87.9	2.80	95.6	3.20	98.4	3.30	102.2	3.30	105.1	3.40
	85	20.2	74.5	2.85	80.7	3.38	87.9	3.88	95.6	4.38	98.4	4.48	102.2	4.58	105.1	4.68
		26.4	74.5	2.80	80.7	3.30	87.9	3.80	95.6	4.30	98.4	4.40	102.2	4.50	105.1	4.60
		50.8	74.5	2.60	80.7	3.00	87.9	3.50	95.6	4.00	98.4	4.10	102.2	4.20	105.1	4.30
		63.4	74.5	2.50	80.7	3.00	87.9	3.50	95.6	3.90	98.4	4.00	102.2	4.10	105.1	4.20
	95	20.2	74.5	3.15	80.7	3.65	87.9	4.28	95.6	4.78	98.4	5.00	102.2	5.08	105.1	5.20
		26.4	74.5	3.10	80.7	3.60	87.9	4.20	95.6	4.70	98.4	4.90	102.2	5.00	105.1	5.10
		50.8	74.5	2.90	80.7	3.40	87.9	3.90	95.6	4.40	98.4	4.50	102.2	4.70	105.1	4.70
		63.4	74.5	2.80	80.7	3.30	87.9	3.90	95.6	4.40	98.4	4.50	102.2	4.60	105.1	4.60
	104	20.2	74.5	3.78	80.7	4.38	87.9	5.08	95.6	5.68	98.4	5.90	102.2	6.00	105.1	6.10
		26.4	74.5	3.70	80.7	4.30	87.9	5.00	95.6	5.60	98.4	5.80	102.2	5.90	105.1	6.00
		50.8	74.5	3.40	80.7	4.00	87.9	4.70	95.6	5.30	98.4	5.40	102.2	5.50	105.1	5.60
		63.4	74.5	3.30	80.7	3.90	87.9	4.60	95.6	5.20	98.4	5.30	102.2	5.40	105.1	5.50
	113	20.2	74.5	4.40	80.7	5.10	87.9	5.88	95.6	6.58	98.4	6.80	102.2	6.93	105.1	7.00
		26.4	74.5	4.30	80.7	5.00	87.9	5.80	95.6	6.50	98.4	6.70	102.2	6.80	105.1	6.90
		50.8	74.5	3.90	80.7	4.60	87.9	5.50	95.6	6.20	98.4	6.30	102.2	6.30	105.1	6.50
		63.4	74.5	3.80	80.7	4.50	87.9	5.30	95.6	6.00	98.4	6.10	102.2	6.20	105.1	6.40

TC = Total Cooling Capacity (MBh).
PI = Power input (KW).
Power input (KW) includes compressor(s) and controls.
Test condition based on 25 feet of equivalent refrigerant piping and no change in elevation between indoor unit and water source unit.

Due to our policy of continuous product innovation, some specifications may change without notification.
©LG Electronics U.S.A., Inc., Englewood Cliffs, NJ. All rights reserved. "LG" is a registered trademark of LG Corp.

PERFORMANCE DATA

Cooling Capacity—ARWB290DA2 / ARWN290DA2 (460 Volt)

Table 15a: Cooling Capacity ARWB290DA2 / ARWN290DA2

Combination Ratio (%) (Capacity index)	Inlet Water Temperature (°F)	Water Flow Rate (gpm)	Indoor Unit Entering Air Wet Bulb Temperature °F													
			57		61		64		67		70		73		76	
			TC MBh	PI kW	TC MBh	PI kW	TC MBh	PI kW	TC MBh	PI kW	TC MBh	PI kW	TC MBh	PI kW	TC MBh	PI kW
130	50	30.4	266.4	5.67	288.4	6.61	314.2	7.68	341.5	8.64	351.8	8.86	365.4	9.07	375.7	9.22
		39.6	266.4	5.56	288.4	6.50	314.2	7.56	341.5	8.50	351.8	8.72	365.4	8.93	375.7	9.08
		76.2	266.4	5.10	288.4	6.06	314.2	7.08	341.5	7.96	351.8	8.15	365.4	8.37	375.7	8.54
		95.1	266.4	4.98	288.4	5.93	314.2	6.91	341.5	7.80	351.8	8.01	365.4	8.19	375.7	8.35
	59	30.4	262.1	7.45	283.8	8.66	309.1	10.08	336.0	11.35	346.1	11.63	359.5	11.90	369.6	12.11
		39.6	262.1	7.30	283.8	8.52	309.1	9.92	336.0	11.17	346.1	11.44	359.5	11.72	369.6	11.93
		76.2	262.1	6.71	283.8	7.96	309.1	9.28	336.0	10.45	346.1	10.70	359.5	10.99	369.6	11.21
		95.1	262.1	6.53	283.8	7.79	309.1	9.08	336.0	10.24	346.1	10.51	359.5	10.77	369.6	10.96
	67	30.4	258.3	9.03	279.7	10.49	304.6	12.22	331.1	13.76	341.0	14.08	354.3	14.42	364.2	14.68
		39.6	258.3	8.85	279.7	10.32	304.6	12.02	331.1	13.54	341.0	13.86	354.3	14.20	364.2	14.46
		76.2	258.3	8.14	279.7	9.65	304.6	11.24	331.1	12.66	341.0	12.97	354.3	13.32	364.2	13.58
		95.1	258.3	7.91	279.7	9.44	304.6	11.01	331.1	12.41	341.0	12.73	354.3	13.06	364.2	13.28
	75	30.4	258.3	11.13	279.7	12.94	304.6	15.08	331.1	16.98	341.0	17.38	354.3	17.80	364.2	18.10
		39.6	258.3	10.91	279.7	12.73	304.6	14.83	331.1	16.70	341.0	17.10	354.3	17.52	364.2	17.83
		76.2	258.3	10.04	279.7	11.90	304.6	13.86	331.1	15.61	341.0	16.00	354.3	16.43	364.2	16.75
		95.1	258.3	9.76	279.7	11.65	304.6	13.58	331.1	15.31	341.0	15.70	354.3	16.10	364.2	16.38
	85	30.4	258.3	13.37	279.7	15.53	304.6	18.08	331.1	20.37	341.0	20.85	354.3	21.35	364.2	21.73
		39.6	258.3	13.10	279.7	15.28	304.6	17.79	331.1	20.04	341.0	20.52	354.3	21.02	364.2	21.40
		76.2	258.3	12.04	279.7	14.28	304.6	16.64	331.1	18.73	341.0	19.20	354.3	19.71	364.2	20.11
		95.1	258.3	11.71	279.7	13.98	304.6	16.29	331.1	18.37	341.0	18.84	354.3	19.32	364.2	19.65
	95	30.4	232.4	13.51	251.7	15.71	274.2	18.29	298.0	20.59	306.9	21.09	318.9	21.60	327.8	21.97
		39.6	232.4	13.24	251.7	15.45	274.2	17.99	298.0	20.26	306.9	20.75	318.9	21.26	327.8	21.64
		76.2	232.4	12.18	251.7	14.44	274.2	16.82	298.0	18.95	306.9	19.42	318.9	19.93	327.8	20.33
		95.1	232.4	11.84	251.7	14.13	274.2	16.48	298.0	18.57	306.9	19.05	318.9	19.54	327.8	19.87
	104	30.4	206.6	14.25	223.8	16.56	243.7	19.29	264.9	21.72	272.8	22.23	283.4	22.77	291.4	23.18
		39.6	206.6	13.97	223.8	16.29	243.7	18.98	264.9	21.37	272.8	21.88	283.4	22.42	291.4	22.83
		76.2	206.6	12.85	223.8	15.23	243.7	17.75	264.9	19.98	272.8	20.48	283.4	21.02	291.4	21.45
		95.1	206.6	12.49	223.8	14.91	243.7	17.38	264.9	19.59	272.8	20.10	283.4	20.61	291.4	20.96
	113	30.4	180.8	15.00	195.9	17.41	213.2	20.30	231.8	22.85	238.7	23.38	247.9	23.95	255.0	24.39
		39.6	180.8	14.70	195.9	17.13	213.2	19.97	231.8	22.48	238.7	23.01	247.9	23.58	255.0	24.02
		76.2	180.8	13.52	195.9	16.02	213.2	18.68	231.8	21.01	238.7	21.54	247.9	22.11	255.0	22.57
		95.1	180.8	13.14	195.9	15.69	213.2	18.28	231.8	20.61	238.7	21.15	247.9	21.68	255.0	22.05
120	50	30.4	252.0	5.37	272.9	6.26	297.4	7.28	323.1	8.18	332.8	8.38	345.8	8.59	355.6	8.74
		39.6	252.0	5.26	272.9	6.16	297.4	7.16	323.1	8.05	332.8	8.25	345.8	8.45	355.6	8.61
		76.2	252.0	4.83	272.9	5.75	297.4	6.69	323.1	7.54	332.8	7.73	345.8	7.91	355.6	8.08
		95.1	252.0	4.72	272.9	5.62	297.4	6.55	323.1	7.38	332.8	7.59	345.8	7.77	355.6	7.90
	59	30.4	249.2	7.12	269.9	8.28	294.0	9.65	319.5	10.85	329.1	11.12	341.9	11.39	351.5	11.59
		39.6	249.2	6.98	269.9	8.15	294.0	9.49	319.5	10.68	329.1	10.94	341.9	11.21	351.5	11.41
		76.2	249.2	6.42	269.9	7.62	294.0	8.87	319.5	9.99	329.1	10.24	341.9	10.50	351.5	10.71
		95.1	249.2	6.25	269.9	7.45	294.0	8.69	319.5	9.79	329.1	10.05	341.9	10.30	351.5	10.46
	67	30.4	246.7	8.68	267.2	10.08	291.0	11.75	316.3	13.23	325.8	13.55	338.4	13.88	347.9	14.11
		39.6	246.7	8.51	267.2	9.92	291.0	11.56	316.3	13.02	325.8	13.33	338.4	13.66	347.9	13.90
		76.2	246.7	7.83	267.2	9.28	291.0	10.81	316.3	12.17	325.8	12.47	338.4	12.80	347.9	13.05
		95.1	246.7	7.61	267.2	9.08	291.0	10.59	316.3	11.93	325.8	12.24	338.4	12.55	347.9	12.74
	75	30.4	246.7	10.67	267.2	12.40	291.0	14.44	316.3	16.26	325.8	16.65	338.4	17.06	347.9	17.36
		39.6	246.7	10.46	267.2	12.20	291.0	14.21	316.3	16.00	325.8	16.38	338.4	16.79	347.9	17.09
		76.2	246.7	9.62	267.2	11.41	291.0	13.29	316.3	14.96	325.8	15.33	338.4	15.73	347.9	16.04
		95.1	246.7	9.35	267.2	11.16	291.0	13.01	316.3	14.67	325.8	15.04	338.4	15.43	347.9	15.66
	85	30.4	246.7	12.90	267.2	14.99	291.0	17.46	316.3	19.67	325.8	20.13	338.4	20.62	347.9	20.98
		39.6	246.7	12.64	267.2	14.75	291.0	17.18	316.3	19.35	325.8	19.81	338.4	20.30	347.9	20.66
		76.2	246.7	11.63	267.2	13.79	291.0	16.06	316.3	18.09	325.8	18.53	338.4	19.02	347.9	19.39
		95.1	246.7	11.31	267.2	13.50	291.0	15.73	316.3	17.74	325.8	18.19	338.4	18.65	347.9	18.93
	95	30.4	225.7	13.22	244.5	15.37	266.3	17.90	289.4	20.16	298.1	20.63	309.7	21.13	318.4	21.51
		39.6	225.7	12.96	244.5	15.12	266.3	17.61	289.4	19.83	298.1	20.30	309.7	20.80	318.4	21.18
		76.2	225.7	11.92	244.5	14.14	266.3	16.47	289.4	18.54	298.1	19.00	309.7	19.50	318.4	19.87
		95.1	225.7	11.59	244.5	13.83	266.3	16.13	289.4	18.18	298.1	18.64	309.7	19.12	318.4	19.40
	104	30.4	204.8	14.23	221.8	16.54	241.6	19.26	262.6	21.69	270.4	22.21	281.0	22.75	288.8	23.14
		39.6	204.8	13.95	221.8	16.27	241.6	18.95	262.6	21.34	270.4	21.85	281.0	22.39	288.8	22.79
		76.2	204.8	12.83	221.8	15.21	241.6	17.72	262.6	19.95	270.4	20.44	281.0	20.98	288.8	21.39
		95.1	204.8	12.47	221.8	14.89	241.6	17.36	262.6	19.56	270.4	20.06	281.0	20.58	288.8	20.88
	113	30.4	183.9	15.24	199.1	17.71	216.9	20.62	235.8	23.23	242.7	23.78	252.3	24.36	259.2	24.78
		39.6	183.9	14.94	199.1	17.42	216.9	20.29	235.8	22.85	242.7	23.40	252.3	23.98	259.2	24.40
		76.2	183.9	13.74	199.1	16.28	216.9	18.97	235.8	21.36	242.7	21.88	252.3	22.46	259.2	22.91
		95.1	183.9	13.35	199.1	15.95	216.9	18.59	235.8	20.94	242.7	21.48	252.3	22.04	259.2	22.36

TC = Total Cooling Capacity (MBh).
PI = Power input (KW).
Power input (KW) includes compressor(s) and controls.
Test condition based on 25 feet of equivalent refrigerant piping and no change in elevation between indoor unit and water source unit.

Due to our policy of continuous product innovation, some specifications may change without notification.
©LG Electronics U.S.A., Inc., Englewood Cliffs, NJ. All rights reserved. "LG" is a registered trademark of LG Corp.

PERFORMANCE DATA

Cooling Capacity—ARWB290DA2 / ARWN290DA2 (460 Volt)

Table 15b: Cooling Capacity ARWB290DA2 / ARWN290DA2

Combination Ratio (%) (Capacity index)	Inlet Water Temperature (°F)	Water Flow Rate (gpm)	Indoor Unit Entering Air Wet Bulb Temperature °F													
			57		61		64		67		70		73		76	
			TC MBh	PI kW	TC MBh	PI kW	TC MBh	PI kW	TC MBh	PI kW	TC MBh	PI kW	TC MBh	PI kW	TC MBh	PI kW
110	50	30.4	237.9	5.08	257.6	5.91	280.5	6.88	305.0	7.74	314.1	7.91	326.3	8.12	335.4	8.25
		39.6	237.9	4.98	257.6	5.81	280.5	6.77	305.0	7.61	314.1	7.79	326.3	7.99	335.4	8.12
		76.2	237.9	4.58	257.6	5.43	280.5	6.32	305.0	7.12	314.1	7.30	326.3	7.48	335.4	7.62
		95.1	237.9	4.44	257.6	5.30	280.5	6.19	305.0	6.98	314.1	7.14	326.3	7.33	335.4	7.42
	59	30.4	236.4	6.81	256.0	7.91	278.8	9.21	303.1	10.37	312.2	10.61	324.3	10.87	333.4	11.06
		39.6	236.4	6.67	256.0	7.78	278.8	9.06	303.1	10.20	312.2	10.44	324.3	10.70	333.4	10.89
		76.2	236.4	6.13	256.0	7.27	278.8	8.47	303.1	9.54	312.2	9.77	324.3	10.02	333.4	10.21
		95.1	236.4	5.96	256.0	7.11	278.8	8.29	303.1	9.35	312.2	9.58	324.3	9.83	333.4	9.95
	67	30.4	235.1	8.34	254.6	9.69	277.3	11.28	301.4	12.70	310.5	13.01	322.5	13.32	331.6	13.56
		39.6	235.1	8.17	254.6	9.53	277.3	11.10	301.4	12.50	310.5	12.80	322.5	13.11	331.6	13.35
		76.2	235.1	7.51	254.6	8.91	277.3	10.38	301.4	11.69	310.5	11.97	322.5	12.28	331.6	12.51
		95.1	235.1	7.31	254.6	8.72	277.3	10.16	301.4	11.46	310.5	11.75	322.5	12.05	331.6	12.20
	75	30.4	235.1	10.20	254.6	11.86	277.3	13.81	301.4	15.55	310.5	15.93	322.5	16.31	331.6	16.60
		39.6	235.1	10.00	254.6	11.67	277.3	13.59	301.4	15.30	310.5	15.67	322.5	16.05	331.6	16.34
		76.2	235.1	9.20	254.6	10.91	277.3	12.71	301.4	14.31	310.5	14.66	322.5	15.04	331.6	15.32
		95.1	235.1	8.95	254.6	10.68	277.3	12.45	301.4	14.03	310.5	14.38	322.5	14.75	331.6	14.94
	85	30.4	235.1	12.44	254.6	14.45	277.3	16.84	301.4	18.97	310.5	19.41	322.5	19.88	331.6	20.25
		39.6	235.1	12.19	254.6	14.22	277.3	16.57	301.4	18.66	310.5	19.10	322.5	19.57	331.6	19.93
		76.2	235.1	11.21	254.6	13.30	277.3	15.49	301.4	17.44	310.5	17.87	322.5	18.33	331.6	18.67
		95.1	235.1	10.91	254.6	13.02	277.3	15.17	301.4	17.10	310.5	17.53	322.5	17.98	331.6	18.21
	95	30.4	219.1	12.94	237.2	15.03	258.4	17.51	280.8	19.72	289.3	20.18	300.5	20.68	308.9	21.05
		39.6	219.1	12.68	237.2	14.79	258.4	17.23	280.8	19.40	289.3	19.86	300.5	20.35	308.9	20.72
		76.2	219.1	11.66	237.2	13.83	258.4	16.11	280.8	18.14	289.3	18.58	300.5	19.06	308.9	19.42
		95.1	219.1	11.34	237.2	13.53	258.4	15.78	280.8	17.78	289.3	18.23	300.5	18.70	308.9	18.93
	104	30.4	203.0	14.21	219.8	16.52	239.4	19.23	260.3	21.66	268.1	22.18	278.5	22.71	286.3	23.12
		39.6	203.0	13.93	219.8	16.25	239.4	18.92	260.3	21.31	268.1	21.82	278.5	22.35	286.3	22.76
		76.2	203.0	12.81	219.8	15.19	239.4	17.69	260.3	19.92	268.1	20.41	278.5	20.94	286.3	21.33
		95.1	203.0	12.46	219.8	14.86	239.4	17.33	260.3	19.53	268.1	20.03	278.5	20.54	286.3	20.79
	113	30.4	186.9	15.49	202.4	18.00	220.4	20.95	239.8	23.60	246.9	24.17	256.5	24.74	263.7	25.19
		39.6	186.9	15.18	202.4	17.71	220.4	20.61	239.8	23.22	246.9	23.78	256.5	24.35	263.7	24.80
		76.2	186.9	13.96	202.4	16.55	220.4	19.27	239.8	21.70	246.9	22.24	256.5	22.82	263.7	23.24
		95.1	186.9	13.58	202.4	16.19	220.4	18.88	239.8	21.28	246.9	21.83	256.5	22.38	263.7	22.65
100	50	30.4	223.5	4.78	242.1	5.54	263.7	6.45	286.6	7.27	295.2	7.45	306.7	7.63	315.3	7.77
		39.6	223.5	4.69	242.1	5.45	263.7	6.35	286.6	7.16	295.2	7.33	306.7	7.51	315.3	7.65
		76.2	223.5	4.31	242.1	5.10	263.7	5.93	286.6	6.70	295.2	6.86	306.7	7.04	315.3	7.17
		95.1	223.5	4.20	242.1	5.00	263.7	5.83	286.6	6.56	295.2	6.72	306.7	6.91	315.3	6.96
	59	30.4	223.5	6.48	242.1	7.52	263.7	8.76	286.6	9.87	295.2	10.10	306.7	10.35	315.3	10.54
		39.6	223.5	6.35	242.1	7.40	263.7	8.62	286.6	9.71	295.2	9.94	306.7	10.19	315.3	10.37
		76.2	223.5	5.84	242.1	6.92	263.7	8.06	286.6	9.08	295.2	9.30	306.7	9.54	315.3	9.71
		95.1	223.5	5.68	242.1	6.78	263.7	7.90	286.6	8.90	295.2	9.12	306.7	9.36	315.3	9.45
	67	30.4	223.5	7.99	242.1	9.28	263.7	10.81	286.6	12.18	295.2	12.46	306.7	12.77	315.3	13.00
		39.6	223.5	7.83	242.1	9.13	263.7	10.64	286.6	11.98	295.2	12.26	306.7	12.57	315.3	12.79
		76.2	223.5	7.20	242.1	8.54	263.7	9.95	286.6	11.20	295.2	11.47	306.7	11.76	315.3	11.97
		95.1	223.5	7.00	242.1	8.36	263.7	9.74	286.6	10.98	295.2	11.25	306.7	11.54	315.3	11.66
	75	30.4	223.5	9.74	242.1	11.32	263.7	13.18	286.6	14.85	295.2	15.21	306.7	15.57	315.3	15.85
		39.6	223.5	9.55	242.1	11.14	263.7	12.97	286.6	14.61	295.2	14.96	306.7	15.32	315.3	15.60
		76.2	223.5	8.78	242.1	10.41	263.7	12.13	286.6	13.66	295.2	13.98	306.7	14.34	315.3	14.60
		95.1	223.5	8.54	242.1	10.19	263.7	11.88	286.6	13.39	295.2	13.72	306.7	14.07	315.3	14.22
	85	30.4	223.5	11.98	242.1	13.92	263.7	16.22	286.6	18.27	295.2	18.70	306.7	19.16	315.3	19.50
		39.6	223.5	11.74	242.1	13.70	263.7	15.96	286.6	17.97	295.2	18.40	306.7	18.85	315.3	19.19
		76.2	223.5	10.80	242.1	12.81	263.7	14.92	286.6	16.80	295.2	17.20	306.7	17.64	315.3	17.96
		95.1	223.5	10.50	242.1	12.53	263.7	14.61	286.6	16.47	295.2	16.88	306.7	17.31	315.3	17.49
	95	30.4	212.4	12.65	230.0	14.70	250.5	17.12	272.3	19.28	280.4	19.74	291.3	20.22	299.5	20.59
		39.6	212.4	12.40	230.0	14.46	250.5	16.84	272.3	18.97	280.4	19.42	291.3	19.90	299.5	20.26
		76.2	212.4	11.40	230.0	13.52	250.5	15.75	272.3	17.73	280.4	18.16	291.3	18.62	299.5	18.96
		95.1	212.4	11.09	230.0	13.23	250.5	15.42	272.3	17.39	280.4	17.82	291.3	18.27	299.5	18.46
	104	30.4	201.2	14.19	217.9	16.49	237.3	19.21	257.9	21.63	265.7	22.15	276.0	22.68	283.7	23.09
		39.6	201.2	13.91	217.9	16.22	237.3	18.90	257.9	21.28	265.7	21.79	276.0	22.32	283.7	22.72
		76.2	201.2	12.79	217.9	15.17	237.3	17.67	257.9	19.89	265.7	20.37	276.0	20.89	283.7	21.27
		95.1	201.2	12.44	217.9	14.84	237.3	17.30	257.9	19.50	265.7	19.99	276.0	20.50	283.7	20.71
	113	30.4	190.0	15.73	205.8	18.27	224.1	21.31	243.5	23.98	251.0	24.56	260.7	25.14	267.9	25.58
		39.6	190.0	15.42	205.8	17.98	224.1	20.96	243.5	23.59	251.0	24.16	260.7	24.74	267.9	25.18
		76.2	190.0	14.18	205.8	16.82	224.1	19.59	243.5	22.05	251.0	22.58	260.7	23.16	267.9	23.58
		95.1	190.0	13.79	205.8	16.45	224.1	19.18	243.5	21.61	251.0	22.16	260.7	22.73	267.9	22.96

TC = Total Cooling Capacity (MBh).
PI = Power input (KW).
Power input (KW) includes compressor(s) and controls.
Test condition based on 25 feet of equivalent refrigerant piping and no change in elevation between indoor unit and water source unit.

LG

Due to our policy of continuous product innovation, some specifications may change without notification.
©LG Electronics U.S.A., Inc., Englewood Cliffs, NJ. All rights reserved. "LG" is a registered trademark of LG Corp.

PERFORMANCE DATA

Cooling Capacity—ARWB290DA2 / ARWN290DA2 (460 Volt)

Table 15c: Cooling Capacity ARWB290DA2 / ARWN290DA2

Combination Ratio (%) (Capacity index)	Inlet Water Temperature (°F)	Water Flow Rate (gpm)	Indoor Unit Entering Air Wet Bulb Temperature °F													
			57		61		64		67		70		73		76	
			TC MBh	PI kW	TC MBh	PI kW	TC MBh	PI kW	TC MBh	PI kW	TC MBh	PI kW	TC MBh	PI kW	TC MBh	PI kW
90	50	30.4	201.2	4.10	217.9	4.77	237.3	5.55	257.9	6.27	265.7	6.41	276.0	6.57	283.7	6.70
		39.6	201.2	4.02	217.9	4.69	237.3	5.46	257.9	6.17	265.7	6.31	276.0	6.46	283.7	6.59
		76.2	201.2	3.71	217.9	4.40	237.3	5.12	257.9	5.77	265.7	5.90	276.0	6.06	283.7	6.17
		95.1	201.2	3.61	217.9	4.30	237.3	5.01	257.9	5.65	265.7	5.78	276.0	5.96	283.7	6.00
	59	30.4	201.2	5.57	217.9	6.47	237.3	7.54	257.9	8.50	265.7	8.70	276.0	8.91	283.7	9.07
		39.6	201.2	5.46	217.9	6.37	237.3	7.42	257.9	8.36	265.7	8.56	276.0	8.77	283.7	8.93
		76.2	201.2	5.03	217.9	5.96	237.3	6.94	257.9	7.82	265.7	8.00	276.0	8.21	283.7	8.36
		95.1	201.2	4.89	217.9	5.83	237.3	6.80	257.9	7.66	265.7	7.85	276.0	8.06	283.7	8.14
	67	30.4	201.2	6.88	217.9	7.99	237.3	9.31	257.9	10.48	265.7	10.73	276.0	11.00	283.7	11.19
		39.6	201.2	6.74	217.9	7.86	237.3	9.16	257.9	10.31	265.7	10.56	276.0	10.82	283.7	11.01
		76.2	201.2	6.20	217.9	7.35	237.3	8.56	257.9	9.64	265.7	9.87	276.0	10.12	283.7	10.31
		95.1	201.2	6.03	217.9	7.19	237.3	8.39	257.9	9.45	265.7	9.69	276.0	9.93	283.7	10.04
	75	30.4	201.2	8.39	217.9	9.75	237.3	11.35	257.9	12.77	265.7	13.08	276.0	13.40	283.7	13.65
		39.6	201.2	8.22	217.9	9.59	237.3	11.17	257.9	12.57	265.7	12.87	276.0	13.19	283.7	13.43
		76.2	201.2	7.56	217.9	8.96	237.3	10.44	257.9	11.76	265.7	12.04	276.0	12.35	283.7	12.57
		95.1	201.2	7.35	217.9	8.77	237.3	10.23	257.9	11.53	265.7	11.81	276.0	12.12	283.7	12.24
	85	30.4	201.2	10.31	217.9	11.98	237.3	13.95	257.9	15.73	265.7	16.10	276.0	16.48	283.7	16.79
		39.6	201.2	10.11	217.9	11.79	237.3	13.73	257.9	15.47	265.7	15.84	276.0	16.22	283.7	16.52
		76.2	201.2	9.30	217.9	11.02	237.3	12.84	257.9	14.46	265.7	14.81	276.0	15.18	283.7	15.46
		95.1	201.2	9.04	217.9	10.79	237.3	12.58	257.9	14.18	265.7	14.53	276.0	14.90	283.7	15.05
	95	30.4	195.6	11.13	211.8	12.93	230.7	15.07	250.8	16.97	258.3	17.36	268.3	17.78	275.9	18.11
		39.6	195.6	10.91	211.8	12.72	230.7	14.82	250.8	16.69	258.3	17.08	268.3	17.50	275.9	17.82
		76.2	195.6	10.03	211.8	11.89	230.7	13.85	250.8	15.60	258.3	15.97	268.3	16.38	275.9	16.68
		95.1	195.6	9.75	211.8	11.64	230.7	13.57	250.8	15.30	258.3	15.68	268.3	16.08	275.9	16.24
	104	30.4	190.0	12.79	205.8	14.85	224.1	17.30	243.6	19.49	250.9	19.95	260.7	20.44	268.0	20.80
		39.6	190.0	12.53	205.8	14.61	224.1	17.02	243.6	19.17	250.9	19.63	260.7	20.11	268.0	20.47
		76.2	190.0	11.52	205.8	13.66	224.1	15.92	243.6	17.92	250.9	18.35	260.7	18.82	268.0	19.16
		95.1	190.0	11.20	205.8	13.37	224.1	15.59	243.6	17.57	250.9	18.01	260.7	18.47	268.0	18.66
	113	30.4	184.4	14.44	199.8	16.77	217.5	19.53	236.4	22.01	243.5	22.55	253.1	23.09	260.1	23.49
		39.6	184.4	14.15	199.8	16.50	217.5	19.22	236.4	21.65	243.5	22.18	253.1	22.72	260.1	23.12
		76.2	184.4	13.01	199.8	15.43	217.5	17.99	236.4	20.24	243.5	20.73	253.1	21.26	260.1	21.64
		95.1	184.4	12.65	199.8	15.10	217.5	17.61	236.4	19.84	243.5	20.34	253.1	20.86	260.1	21.08
80	50	30.4	178.8	3.45	193.7	3.99	210.9	4.65	229.3	5.26	236.2	5.39	245.3	5.50	252.2	5.60
		39.6	178.8	3.38	193.7	3.93	210.9	4.58	229.3	5.18	236.2	5.30	245.3	5.42	252.2	5.51
		76.2	178.8	3.10	193.7	3.70	210.9	4.29	229.3	4.83	236.2	4.96	245.3	5.07	252.2	5.16
		95.1	178.8	3.03	193.7	3.61	210.9	4.20	229.3	4.73	236.2	4.85	245.3	4.97	252.2	5.03
	59	30.4	178.8	4.67	193.7	5.43	210.9	6.32	229.3	7.13	236.2	7.30	245.3	7.47	252.2	7.60
		39.6	178.8	4.58	193.7	5.34	210.9	6.22	229.3	7.01	236.2	7.18	245.3	7.35	252.2	7.48
		76.2	178.8	4.21	193.7	5.00	210.9	5.82	229.3	6.55	236.2	6.71	245.3	6.88	252.2	7.00
		95.1	178.8	4.10	193.7	4.89	210.9	5.70	229.3	6.42	236.2	6.58	245.3	6.75	252.2	6.82
	67	30.4	178.8	5.76	193.7	6.70	210.9	7.81	229.3	8.78	236.2	9.00	245.3	9.22	252.2	9.38
		39.6	178.8	5.65	193.7	6.59	210.9	7.68	229.3	8.64	236.2	8.85	245.3	9.07	252.2	9.23
		76.2	178.8	5.20	193.7	6.16	210.9	7.18	229.3	8.08	236.2	8.27	245.3	8.49	252.2	8.64
		95.1	178.8	5.05	193.7	6.03	210.9	7.03	229.3	7.92	236.2	8.12	245.3	8.33	252.2	8.41
	75	30.4	178.8	7.03	193.7	8.17	210.9	9.51	229.3	10.71	236.2	10.97	245.3	11.24	252.2	11.44
		39.6	178.8	6.89	193.7	8.04	210.9	9.36	229.3	10.54	236.2	10.79	245.3	11.06	252.2	11.26
		76.2	178.8	6.34	193.7	7.51	210.9	8.75	229.3	9.86	236.2	10.09	245.3	10.35	252.2	10.54
		95.1	178.8	6.16	193.7	7.35	210.9	8.57	229.3	9.66	236.2	9.90	245.3	10.16	252.2	10.26
	85	30.4	178.8	8.64	193.7	10.04	210.9	11.70	229.3	13.18	236.2	13.49	245.3	13.82	252.2	14.07
		39.6	178.8	8.47	193.7	9.88	210.9	11.51	229.3	12.97	236.2	13.27	245.3	13.60	252.2	13.85
		76.2	178.8	7.79	193.7	9.24	210.9	10.77	229.3	12.12	236.2	12.41	245.3	12.73	252.2	12.96
		95.1	178.8	7.58	193.7	9.04	210.9	10.54	229.3	11.88	236.2	12.18	245.3	12.49	252.2	12.62
	95	30.4	178.8	9.61	193.7	11.16	210.9	13.00	229.3	14.65	236.2	14.99	245.3	15.36	252.2	15.63
		39.6	178.8	9.42	193.7	10.98	210.9	12.79	229.3	14.41	236.2	14.75	245.3	15.11	252.2	15.38
		76.2	178.8	8.66	193.7	10.27	210.9	11.96	229.3	13.47	236.2	13.79	245.3	14.14	252.2	14.40
		95.1	178.8	8.42	193.7	10.05	210.9	11.72	229.3	13.21	236.2	13.53	245.3	13.88	252.2	14.02
	104	30.4	178.8	11.38	193.7	13.22	210.9	15.40	229.3	17.34	236.2	17.76	245.3	18.19	252.2	18.52
		39.6	178.8	11.15	193.7	13.01	210.9	15.15	229.3	17.06	236.2	17.47	245.3	17.90	252.2	18.22
		76.2	178.8	10.25	193.7	12.16	210.9	14.16	229.3	15.95	236.2	16.33	245.3	16.75	252.2	17.05
		95.1	178.8	9.97	193.7	11.90	210.9	13.87	229.3	15.64	236.2	16.03	245.3	16.44	252.2	16.60
	113	30.4	178.8	13.14	193.7	15.29	210.9	17.80	229.3	20.03	236.2	20.52	245.3	21.03	252.2	21.40
		39.6	178.8	12.88	193.7	15.04	210.9	17.51	229.3	19.71	236.2	20.19	245.3	20.69	252.2	21.06
		76.2	178.8	11.84	193.7	14.05	210.9	16.36	229.3	18.43	236.2	18.87	245.3	19.36	252.2	19.70
		95.1	178.8	11.52	193.7	13.75	210.9	16.02	229.3	18.07	236.2	18.53	245.3	19.00	252.2	19.18

TC = Total Cooling Capacity (MBh).
PI = Power input (KW).
Power input (KW) includes compressor(s) and controls.
Test condition based on 25 feet of equivalent refrigerant piping and no change in elevation between indoor unit and water source unit.

Due to our policy of continuous product innovation, some specifications may change without notification.
©LG Electronics U.S.A., Inc., Englewood Cliffs, NJ. All rights reserved. "LG" is a registered trademark of LG Corp.

PERFORMANCE DATA

Cooling Capacity—ARWB290DA2 / ARWN290DA2 (460 Volt)

Table 15d: Cooling Capacity ARWB290DA2 / ARWN290DA2

Combination Ratio (%) (Capacity index)	Inlet Water Temperature (°F)	Water Flow Rate (gpm)	Indoor Unit Entering Air Wet Bulb Temperature °F													
			57		61		64		67		70		73		76	
			TC MBh	PI kW	TC MBh	PI kW	TC MBh	PI kW	TC MBh	PI kW	TC MBh	PI kW	TC MBh	PI kW	TC MBh	PI kW
70	50	30.4	156.5	2.87	169.5	3.32	184.6	3.87	200.6	4.37	206.6	4.48	214.7	4.57	220.7	4.66
		39.6	156.5	2.81	169.5	3.27	184.6	3.81	200.6	4.30	206.6	4.41	214.7	4.50	220.7	4.59
		76.2	156.5	2.58	169.5	3.06	184.6	3.57	200.6	4.02	206.6	4.12	214.7	4.21	220.7	4.29
		95.1	156.5	2.52	169.5	2.99	184.6	3.50	200.6	3.93	206.6	4.03	214.7	4.14	220.7	4.19
	59	30.4	156.5	3.89	169.5	4.51	184.6	5.25	200.6	5.93	206.6	6.07	214.7	6.21	220.7	6.32
		39.6	156.5	3.81	169.5	4.44	184.6	5.17	200.6	5.83	206.6	5.97	214.7	6.11	220.7	6.22
		76.2	156.5	3.50	169.5	4.15	184.6	4.84	200.6	5.45	206.6	5.58	214.7	5.72	220.7	5.82
		95.1	156.5	3.41	169.5	4.06	184.6	4.74	200.6	5.34	206.6	5.47	214.7	5.61	220.7	5.67
	67	30.4	156.5	4.80	169.5	5.57	184.6	6.48	200.6	7.31	206.6	7.48	214.7	7.66	220.7	7.79
		39.6	156.5	4.70	169.5	5.48	184.6	6.38	200.6	7.19	206.6	7.36	214.7	7.54	220.7	7.67
		76.2	156.5	4.32	169.5	5.12	184.6	5.97	200.6	6.72	206.6	6.88	214.7	7.06	220.7	7.18
		95.1	156.5	4.20	169.5	5.01	184.6	5.84	200.6	6.59	206.6	6.75	214.7	6.92	220.7	6.99
	75	30.4	156.5	5.85	169.5	6.79	184.6	7.91	200.6	8.90	206.6	9.12	214.7	9.34	220.7	9.51
		39.6	156.5	5.73	169.5	6.68	184.6	7.78	200.6	8.76	206.6	8.97	214.7	9.19	220.7	9.36
		76.2	156.5	5.27	169.5	6.25	184.6	7.28	200.6	8.19	206.6	8.39	214.7	8.60	220.7	8.76
		95.1	156.5	5.12	169.5	6.11	184.6	7.13	200.6	8.03	206.6	8.23	214.7	8.44	220.7	8.53
	85	30.4	156.5	7.18	169.5	8.36	184.6	9.73	200.6	10.96	206.6	11.22	214.7	11.49	220.7	11.70
		39.6	156.5	7.04	169.5	8.22	184.6	9.57	200.6	10.78	206.6	11.04	214.7	11.31	220.7	11.51
		76.2	156.5	6.48	169.5	7.68	184.6	8.95	200.6	10.08	206.6	10.32	214.7	10.58	220.7	10.77
		95.1	156.5	6.30	169.5	7.52	184.6	8.77	200.6	9.88	206.6	10.13	214.7	10.39	220.7	10.49
	95	30.4	156.5	7.99	169.5	9.28	184.6	10.82	200.6	12.18	206.6	12.46	214.7	12.76	220.7	13.00
		39.6	156.5	7.83	169.5	9.13	184.6	10.64	200.6	11.98	206.6	12.26	214.7	12.56	220.7	12.79
		76.2	156.5	7.20	169.5	8.54	184.6	9.94	200.6	11.20	206.6	11.47	214.7	11.76	220.7	11.97
		95.1	156.5	7.00	169.5	8.35	184.6	9.74	200.6	10.98	206.6	11.25	214.7	11.54	220.7	11.66
	104	30.4	156.5	9.46	169.5	10.99	184.6	12.79	200.6	14.41	206.6	14.76	214.7	15.12	220.7	15.40
		39.6	156.5	9.27	169.5	10.81	184.6	12.59	200.6	14.18	206.6	14.52	214.7	14.88	220.7	15.15
		76.2	156.5	8.53	169.5	10.11	184.6	11.78	200.6	13.26	206.6	13.58	214.7	13.92	220.7	14.18
		95.1	156.5	8.29	169.5	9.89	184.6	11.53	200.6	13.00	206.6	13.32	214.7	13.67	220.7	13.80
	113	30.4	156.5	10.92	169.5	12.69	184.6	14.77	200.6	16.65	206.6	17.06	214.7	17.48	220.7	17.79
		39.6	156.5	10.71	169.5	12.49	184.6	14.54	200.6	16.38	206.6	16.78	214.7	17.20	220.7	17.51
		76.2	156.5	9.86	169.5	11.68	184.6	13.62	200.6	15.32	206.6	15.69	214.7	16.08	220.7	16.39
		95.1	156.5	9.58	169.5	11.43	184.6	13.32	200.6	15.02	206.6	15.39	214.7	15.80	220.7	15.94
60	50	30.4	134.1	2.30	145.3	2.65	158.2	3.07	172.0	3.47	177.1	3.57	184.0	3.64	189.2	3.72
		39.6	134.1	2.25	145.3	2.61	158.2	3.03	172.0	3.41	177.1	3.51	184.0	3.59	189.2	3.66
		76.2	134.1	2.06	145.3	2.44	158.2	2.85	172.0	3.19	177.1	3.29	184.0	3.37	189.2	3.41
		95.1	134.1	1.99	145.3	2.39	158.2	2.79	172.0	3.15	177.1	3.21	184.0	3.31	189.2	3.33
	59	30.4	134.1	3.10	145.3	3.60	158.2	4.19	172.0	4.72	177.1	4.84	184.0	4.95	189.2	5.04
		39.6	134.1	3.04	145.3	3.54	158.2	4.12	172.0	4.64	177.1	4.76	184.0	4.87	189.2	4.96
		76.2	134.1	2.79	145.3	3.31	158.2	3.86	172.0	4.34	177.1	4.45	184.0	4.56	189.2	4.64
		95.1	134.1	2.71	145.3	3.24	158.2	3.78	172.0	4.26	177.1	4.36	184.0	4.48	189.2	4.52
	67	30.4	134.1	3.82	145.3	4.44	158.2	5.17	172.0	5.82	177.1	5.97	184.0	6.11	189.2	6.22
		39.6	134.1	3.74	145.3	4.37	158.2	5.09	172.0	5.73	177.1	5.87	184.0	6.01	189.2	6.12
		76.2	134.1	3.44	145.3	4.08	158.2	4.76	172.0	5.36	177.1	5.48	184.0	5.62	189.2	5.73
		95.1	134.1	3.35	145.3	4.00	158.2	4.66	172.0	5.25	177.1	5.38	184.0	5.52	189.2	5.58
	75	30.4	134.1	4.66	145.3	5.42	158.2	6.30	172.0	7.11	177.1	7.27	184.0	7.45	189.2	7.58
		39.6	134.1	4.57	145.3	5.33	158.2	6.20	172.0	6.99	177.1	7.15	184.0	7.33	189.2	7.46
		76.2	134.1	4.20	145.3	4.98	158.2	5.80	172.0	6.53	177.1	6.69	184.0	6.86	189.2	6.98
		95.1	134.1	4.08	145.3	4.87	158.2	5.68	172.0	6.40	177.1	6.56	184.0	6.73	189.2	6.80
	85	30.4	134.1	5.73	145.3	6.66	158.2	7.76	172.0	8.73	177.1	8.94	184.0	9.15	189.2	9.33
		39.6	134.1	5.62	145.3	6.55	158.2	7.63	172.0	8.59	177.1	8.80	184.0	9.01	189.2	9.18
		76.2	134.1	5.17	145.3	6.13	158.2	7.13	172.0	8.03	177.1	8.23	184.0	8.44	189.2	8.59
		95.1	134.1	5.02	145.3	5.99	158.2	6.99	172.0	7.88	177.1	8.07	184.0	8.28	189.2	8.36
	95	30.4	134.1	6.37	145.3	7.40	158.2	8.62	172.0	9.71	177.1	9.94	184.0	10.18	189.2	10.37
		39.6	134.1	6.24	145.3	7.28	158.2	8.48	172.0	9.55	177.1	9.78	184.0	10.02	189.2	10.20
		76.2	134.1	5.74	145.3	6.81	158.2	7.93	172.0	8.93	177.1	9.14	184.0	9.37	189.2	9.54
		95.1	134.1	5.58	145.3	6.66	158.2	7.76	172.0	8.75	177.1	8.97	184.0	9.20	189.2	9.29
	104	30.4	134.1	7.54	145.3	8.76	158.2	10.20	172.0	11.50	177.1	11.77	184.0	12.05	189.2	12.28
		39.6	134.1	7.39	145.3	8.62	158.2	10.04	172.0	11.31	177.1	11.58	184.0	11.86	189.2	12.08
		76.2	134.1	6.80	145.3	8.06	158.2	9.39	172.0	10.57	177.1	10.82	184.0	11.10	189.2	11.30
		95.1	134.1	6.61	145.3	7.89	158.2	9.20	172.0	10.36	177.1	10.62	184.0	10.89	189.2	11.00
	113	30.4	134.1	8.71	145.3	10.12	158.2	11.79	172.0	13.29	177.1	13.60	184.0	13.92	189.2	14.19
		39.6	134.1	8.54	145.3	9.96	158.2	11.60	172.0	13.07	177.1	13.38	184.0	13.70	189.2	13.96
		76.2	134.1	7.86	145.3	9.31	158.2	10.85	172.0	12.21	177.1	12.50	184.0	12.83	189.2	13.06
		95.1	134.1	7.64	145.3	9.12	158.2	10.64	172.0	11.97	177.1	12.27	184.0	12.58	189.2	12.71

TC = Total Cooling Capacity (MBh).
PI = Power input (KW).
Power input (KW) includes compressor(s) and controls.
Test condition based on 25 feet of equivalent refrigerant piping and no change in elevation between indoor unit and water source unit.

Due to our policy of continuous product innovation, some specifications may change without notification.
©LG Electronics U.S.A., Inc., Englewood Cliffs, NJ. All rights reserved. "LG" is a registered trademark of LG Corp.

PERFORMANCE DATA

Cooling Capacity—ARWB290DA2 / ARWN290DA2 (460 Volt)

Table 15e: Cooling Capacity ARWB290DA2 / ARWN290DA2

Combination Ratio (%) (Capacity index)	Inlet Water Temperature (°F)	Water Flow Rate (gpm)	Indoor Unit Entering Air Wet Bulb Temperature °F													
			57		61		64		67		70		73		76	
			TC MBh	PI kW	TC MBh	PI kW	TC MBh	PI kW	TC MBh	PI kW	TC MBh	PI kW	TC MBh	PI kW	TC MBh	PI kW
50	50	30.4	111.8	1.70	121.0	1.97	131.8	2.32	143.3	2.59	147.6	2.67	153.3	2.71	157.6	2.78
		39.6	111.8	1.66	121.0	1.94	131.8	2.28	143.3	2.55	147.6	2.63	153.3	2.67	157.6	2.73
		76.2	111.8	1.53	121.0	1.83	131.8	2.13	143.3	2.40	147.6	2.45	153.3	2.51	157.6	2.55
		95.1	111.8	1.48	121.0	1.79	131.8	2.09	143.3	2.33	147.6	2.40	153.3	2.46	157.6	2.48
	59	30.4	111.8	2.31	121.0	2.68	131.8	3.13	143.3	3.52	147.6	3.61	153.3	3.69	157.6	3.76
		39.6	111.8	2.26	121.0	2.64	131.8	3.08	143.3	3.46	147.6	3.55	153.3	3.63	157.6	3.70
		76.2	111.8	2.08	121.0	2.47	131.8	2.88	143.3	3.24	147.6	3.32	153.3	3.40	157.6	3.46
		95.1	111.8	2.02	121.0	2.42	131.8	2.82	143.3	3.17	147.6	3.25	153.3	3.34	157.6	3.37
	67	30.4	111.8	2.85	121.0	3.32	131.8	3.85	143.3	4.34	147.6	4.44	153.3	4.55	157.6	4.63
		39.6	111.8	2.79	121.0	3.26	131.8	3.79	143.3	4.27	147.6	4.37	153.3	4.48	157.6	4.56
		76.2	111.8	2.57	121.0	3.04	131.8	3.55	143.3	3.99	147.6	4.09	153.3	4.19	157.6	4.27
		95.1	111.8	2.50	121.0	2.98	131.8	3.47	143.3	3.92	147.6	4.01	153.3	4.12	157.6	4.16
	75	30.4	111.8	3.47	121.0	4.04	131.8	4.71	143.3	5.30	147.6	5.42	153.3	5.55	157.6	5.65
		39.6	111.8	3.40	121.0	3.97	131.8	4.63	143.3	5.21	147.6	5.33	153.3	5.46	157.6	5.56
		76.2	111.8	3.13	121.0	3.71	131.8	4.33	143.3	4.87	147.6	4.99	153.3	5.11	157.6	5.21
		95.1	111.8	3.04	121.0	3.63	131.8	4.24	143.3	4.77	147.6	4.89	153.3	5.02	157.6	5.07
	85	30.4	111.8	4.28	121.0	4.96	131.8	5.78	143.3	6.52	147.6	6.67	153.3	6.83	157.6	6.95
		39.6	111.8	4.19	121.0	4.88	131.8	5.69	143.3	6.41	147.6	6.56	153.3	6.72	157.6	6.84
		76.2	111.8	3.85	121.0	4.57	131.8	5.32	143.3	5.99	147.6	6.13	153.3	6.29	157.6	6.40
		95.1	111.8	3.74	121.0	4.47	131.8	5.21	143.3	5.87	147.6	6.02	153.3	6.17	157.6	6.24
	95	30.4	111.8	4.74	121.0	5.52	131.8	6.42	143.3	7.24	147.6	7.41	153.3	7.59	157.6	7.72
		39.6	111.8	4.65	121.0	5.43	131.8	6.32	143.3	7.12	147.6	7.29	153.3	7.47	157.6	7.60
		76.2	111.8	4.28	121.0	5.07	131.8	5.91	143.3	6.66	147.6	6.82	153.3	6.99	157.6	7.12
		95.1	111.8	4.16	121.0	4.97	131.8	5.79	143.3	6.53	147.6	6.69	153.3	6.86	157.6	6.93
	104	30.4	111.8	5.62	121.0	6.54	131.8	7.61	143.3	8.57	147.6	8.77	153.3	8.98	157.6	9.14
		39.6	111.8	5.51	121.0	6.43	131.8	7.49	143.3	8.43	147.6	8.63	153.3	8.84	157.6	9.00
		76.2	111.8	5.07	121.0	6.01	131.8	7.00	143.3	7.88	147.6	8.07	153.3	8.28	157.6	8.43
		95.1	111.8	4.93	121.0	5.88	131.8	6.86	143.3	7.73	147.6	7.92	153.3	8.12	157.6	8.20
	113	30.4	111.8	6.50	121.0	7.55	131.8	8.80	143.3	9.90	147.6	10.13	153.3	10.37	157.6	10.57
		39.6	111.8	6.37	121.0	7.43	131.8	8.66	143.3	9.74	147.6	9.97	153.3	10.21	157.6	10.40
		76.2	111.8	5.86	121.0	6.95	131.8	8.09	143.3	9.10	147.6	9.32	153.3	9.57	157.6	9.74
		95.1	111.8	5.70	121.0	6.79	131.8	7.93	143.3	8.93	147.6	9.15	153.3	9.38	157.6	9.47

TC = Total Cooling Capacity (MBh).
PI = Power input (KW).
Power input (KW) includes compressor(s) and controls.
Test condition based on 25 feet of equivalent refrigerant piping and no change in elevation between indoor unit and water source unit.

Due to our policy of continuous product innovation, some specifications may change without notification.
©LG Electronics U.S.A., Inc., Englewood Cliffs, NJ. All rights reserved. "LG" is a registered trademark of LG Corp.

PERFORMANCE DATA

Cooling Capacity—ARWB390DA2 / ARWN390DA2 (460 Volt)

Table 16a: Cooling Capacity ARWB390DA2 / ARWN390DA2

Combination Ratio (%) (Capacity index)	Inlet Water Temperature (°F)	Water Flow Rate (gpm)	Indoor Unit Entering Air Wet Bulb Temperature °F													
			57		61		64		67		70		73		76	
			TC MBh	PI kW	TC MBh	PI kW	TC MBh	PI kW	TC MBh	PI kW	TC MBh	PI kW	TC MBh	PI kW	TC MBh	PI kW
130	50	40.5	355.2	7.55	384.7	8.80	419.0	10.25	455.2	11.52	469.0	11.81	487.2	12.10	501.0	12.30
		52.8	355.2	7.40	384.7	8.66	419.0	10.08	455.2	11.34	469.0	11.62	487.2	11.91	501.0	12.12
		101.6	355.2	6.81	384.7	8.09	419.0	9.42	455.2	10.61	469.0	10.86	487.2	11.15	501.0	11.40
		126.8	355.2	6.64	384.7	7.92	419.0	9.22	455.2	10.39	469.0	10.67	487.2	10.95	501.0	11.12
	59	40.5	349.5	9.93	378.5	11.55	412.2	13.45	448.0	15.13	461.5	15.50	479.4	15.88	492.9	16.15
		52.8	349.5	9.73	378.5	11.36	412.2	13.23	448.0	14.89	461.5	15.25	479.4	15.63	492.9	15.91
		101.6	349.5	8.95	378.5	10.62	412.2	12.37	448.0	13.93	461.5	14.27	479.4	14.65	492.9	14.95
		126.8	349.5	8.71	378.5	10.39	412.2	12.11	448.0	13.65	461.5	14.01	479.4	14.37	492.9	14.61
	67	40.5	344.4	12.04	373.0	13.98	406.2	16.29	441.6	18.35	454.8	18.78	472.5	19.24	485.7	19.58
		52.8	344.4	11.80	373.0	13.76	406.2	16.03	441.6	18.05	454.8	18.48	472.5	18.94	485.7	19.28
		101.6	344.4	10.85	373.0	12.87	406.2	14.99	441.6	16.88	454.8	17.30	472.5	17.76	485.7	18.11
		126.8	344.4	10.55	373.0	12.59	406.2	14.68	441.6	16.55	454.8	16.98	472.5	17.41	485.7	17.71
	75	40.5	344.4	14.85	373.0	17.25	406.2	20.09	441.6	22.62	454.8	23.16	472.5	23.72	485.7	24.14
		52.8	344.4	14.55	373.0	16.97	406.2	19.77	441.6	22.26	454.8	22.79	472.5	23.35	485.7	23.78
		101.6	344.4	13.38	373.0	15.87	406.2	18.49	441.6	20.82	454.8	21.33	472.5	21.90	485.7	22.34
		126.8	344.4	13.01	373.0	15.53	406.2	18.11	441.6	20.41	454.8	20.94	472.5	21.47	485.7	21.84
	85	40.5	344.4	17.81	373.0	20.71	406.2	24.11	441.6	27.16	454.8	27.79	472.5	28.47	485.7	28.96
		52.8	344.4	17.46	373.0	20.37	406.2	23.72	441.6	26.72	454.8	27.35	472.5	28.03	485.7	28.53
		101.6	344.4	16.06	373.0	19.04	406.2	22.18	441.6	24.98	454.8	25.60	472.5	26.28	485.7	26.81
		126.8	344.4	15.62	373.0	18.64	406.2	21.73	441.6	24.49	454.8	25.12	472.5	25.77	485.7	26.20
	95	40.5	310.0	18.02	335.7	20.94	365.6	24.38	397.4	27.46	409.3	28.11	425.2	28.78	437.1	29.29
		52.8	310.0	17.66	335.7	20.60	365.6	23.99	397.4	27.02	409.3	27.66	425.2	28.34	437.1	28.85
		101.6	310.0	16.24	335.7	19.26	365.6	22.43	397.4	25.26	409.3	25.89	425.2	26.58	437.1	27.11
		126.8	310.0	15.79	335.7	18.85	365.6	21.97	397.4	24.76	409.3	25.41	425.2	26.06	437.1	26.50
	104	40.5	275.5	19.00	298.4	22.09	325.0	25.73	353.2	28.97	363.8	29.65	378.0	30.36	388.6	30.89
		52.8	275.5	18.62	298.4	21.73	325.0	25.31	353.2	28.50	363.8	29.18	378.0	29.89	388.6	30.43
		101.6	275.5	17.13	298.4	20.31	325.0	23.66	353.2	26.64	363.8	27.31	378.0	28.03	388.6	28.59
		126.8	275.5	16.66	298.4	19.88	325.0	23.18	353.2	26.12	363.8	26.80	378.0	27.48	388.6	27.95
	113	40.5	241.0	19.97	261.1	23.24	284.4	27.07	309.0	30.48	318.3	31.20	330.8	31.94	340.1	32.50
		52.8	241.0	19.58	261.1	22.86	284.4	26.63	309.0	29.98	318.3	30.70	330.8	31.44	340.1	32.01
		101.6	241.0	18.02	261.1	21.36	284.4	24.89	309.0	28.02	318.3	28.73	330.8	29.48	340.1	30.07
		126.8	241.0	17.53	261.1	20.91	284.4	24.39	309.0	27.48	318.3	28.19	330.8	28.90	340.1	29.40
120	50	40.5	336.2	7.17	364.0	8.33	396.5	9.70	430.9	10.93	444.0	11.19	461.1	11.44	474.1	11.64
		52.8	336.2	7.03	364.0	8.19	396.5	9.55	430.9	10.75	444.0	11.01	461.1	11.26	474.1	11.46
		101.6	336.2	6.46	364.0	7.67	396.5	8.93	430.9	10.05	444.0	10.30	461.1	10.57	474.1	10.77
		126.8	336.2	6.28	364.0	7.50	396.5	8.74	430.9	9.85	444.0	10.09	461.1	10.37	474.1	10.51
	59	40.5	332.4	9.50	359.9	11.04	392.0	12.86	426.1	14.48	438.9	14.83	455.9	15.17	468.7	15.44
		52.8	332.4	9.31	359.9	10.86	392.0	12.65	426.1	14.25	438.9	14.59	455.9	14.94	468.7	15.21
		101.6	332.4	8.56	359.9	10.16	392.0	11.83	426.1	13.32	438.9	13.65	455.9	14.01	468.7	14.28
		126.8	332.4	8.33	359.9	9.94	392.0	11.59	426.1	13.06	438.9	13.39	455.9	13.74	468.7	13.94
	67	40.5	329.0	11.57	356.3	13.45	388.0	15.66	421.8	17.65	434.4	18.06	451.3	18.50	463.9	18.83
		52.8	329.0	11.34	356.3	13.23	388.0	15.41	421.8	17.36	434.4	17.77	451.3	18.21	463.9	18.54
		101.6	329.0	10.43	356.3	12.37	388.0	14.41	421.8	16.23	434.4	16.63	451.3	17.07	463.9	17.40
		126.8	329.0	10.15	356.3	12.11	388.0	14.12	421.8	15.91	434.4	16.32	451.3	16.74	463.9	16.99
	75	40.5	329.0	14.22	356.3	16.53	388.0	19.26	421.8	21.68	434.4	22.19	451.3	22.74	463.9	23.13
		52.8	329.0	13.94	356.3	16.26	388.0	18.95	421.8	21.33	434.4	21.84	451.3	22.38	463.9	22.78
		101.6	329.0	12.82	356.3	15.21	388.0	17.71	421.8	19.95	434.4	20.44	451.3	20.97	463.9	21.38
		126.8	329.0	12.47	356.3	14.88	388.0	17.35	421.8	19.56	434.4	20.06	451.3	20.57	463.9	20.88
	85	40.5	329.0	17.20	356.3	19.99	388.0	23.29	421.8	26.22	434.4	26.84	451.3	27.49	463.9	27.98
		52.8	329.0	16.86	356.3	19.67	388.0	22.91	421.8	25.80	434.4	26.41	451.3	27.06	463.9	27.55
		101.6	329.0	15.51	356.3	18.39	388.0	21.42	421.8	24.12	434.4	24.71	451.3	25.36	463.9	25.85
		126.8	329.0	15.08	356.3	17.99	388.0	20.98	421.8	23.65	434.4	24.25	451.3	24.87	463.9	25.24
	95	40.5	301.1	17.63	326.0	20.49	355.1	23.87	386.0	26.87	397.5	27.51	413.0	28.18	424.6	28.68
		52.8	301.1	17.28	326.0	20.16	355.1	23.48	386.0	26.44	397.5	27.07	413.0	27.74	424.6	28.24
		101.6	301.1	15.89	326.0	18.85	355.1	21.95	386.0	24.72	397.5	25.33	413.0	25.99	424.6	26.50
		126.8	301.1	15.45	326.0	18.44	355.1	21.50	386.0	24.24	397.5	24.86	413.0	25.49	424.6	25.87
	104	40.5	273.1	18.98	295.8	22.05	322.1	25.68	350.2	28.91	360.7	29.60	374.7	30.32	385.2	30.86
		52.8	273.1	18.60	295.8	21.69	322.1	25.27	350.2	28.45	360.7	29.13	374.7	29.85	385.2	30.39
		101.6	273.1	17.10	295.8	20.28	322.1	23.63	350.2	26.61	360.7	27.26	374.7	27.97	385.2	28.52
		126.8	273.1	16.63	295.8	19.85	322.1	23.14	350.2	26.08	360.7	26.75	374.7	27.43	385.2	27.84
	113	40.5	245.1	20.33	265.6	23.60	289.1	27.50	314.4	30.96	323.9	31.70	336.4	32.47	345.8	33.05
		52.8	245.1	19.92	265.6	23.22	289.1	27.06	314.4	30.46	323.9	31.19	336.4	31.96	345.8	32.54
		101.6	245.1	18.31	265.6	21.71	289.1	25.31	314.4	28.50	323.9	29.19	336.4	29.95	345.8	30.54
		126.8	245.1	17.81	265.6	21.26	289.1	24.78	314.4	27.92	323.9	28.64	336.4	29.37	345.8	29.81

TC = Total Cooling Capacity (MBh).
PI = Power input (KW).
Power input (KW) includes compressor(s) and controls.
Test condition based on 25 feet of equivalent refrigerant piping and no change in elevation between indoor unit and water source unit.

LG

Due to our policy of continuous product innovation, some specifications may change without notification.
©LG Electronics U.S.A., Inc., Englewood Cliffs, NJ. All rights reserved. "LG" is a registered trademark of LG Corp.

PERFORMANCE DATA

Cooling Capacity—ARWB390DA2 / ARWN390DA2 (460 Volt)

Table 16b: Cooling Capacity ARWB390DA2 / ARWN390DA2

Combination Ratio (%) (Capacity index)	Inlet Water Temperature (°F)	Water Flow Rate (gpm)	Indoor Unit Entering Air Wet Bulb Temperature °F													
			57		61		64		67		70		73		76	
			TC MBh	PI kW	TC MBh	PI kW	TC MBh	PI kW	TC MBh	PI kW	TC MBh	PI kW	TC MBh	PI kW	TC MBh	PI kW
110	50	40.5	317.1	6.78	343.4	7.88	374.1	9.17	406.5	10.33	418.9	10.56	435.0	10.81	447.3	11.00
		52.8	317.1	6.64	343.4	7.75	374.1	9.02	406.5	10.16	418.9	10.39	435.0	10.64	447.3	10.83
		101.6	317.1	6.09	343.4	7.23	374.1	8.42	406.5	9.48	418.9	9.71	435.0	9.97	447.3	10.16
		126.8	317.1	5.94	343.4	7.09	374.1	8.26	406.5	9.31	418.9	9.54	435.0	9.79	447.3	9.91
	59	40.5	315.2	9.07	341.4	10.54	371.8	12.28	404.1	13.82	416.3	14.15	432.4	14.49	444.6	14.75
		52.8	315.2	8.89	341.4	10.37	371.8	12.08	404.1	13.60	416.3	13.92	432.4	14.26	444.6	14.52
		101.6	315.2	8.17	341.4	9.69	371.8	11.29	404.1	12.71	416.3	13.02	432.4	13.36	444.6	13.61
		126.8	315.2	7.95	341.4	9.49	371.8	11.06	404.1	12.47	416.3	12.78	432.4	13.11	444.6	13.27
	67	40.5	313.5	11.11	339.6	12.91	369.8	15.04	402.0	16.93	414.0	17.34	430.1	17.76	442.2	18.08
		52.8	313.5	10.89	339.6	12.70	369.8	14.80	402.0	16.66	414.0	17.06	430.1	17.48	442.2	17.80
		101.6	313.5	10.02	339.6	11.88	369.8	13.84	402.0	15.58	414.0	15.96	430.1	16.37	442.2	16.68
		126.8	313.5	9.74	339.6	11.62	369.8	13.55	402.0	15.28	414.0	15.66	430.1	16.06	442.2	16.26
	75	40.5	313.5	13.61	339.6	15.82	369.8	18.42	402.0	20.75	414.0	21.23	430.1	21.75	442.2	22.13
		52.8	313.5	13.34	339.6	15.56	369.8	18.12	402.0	20.41	414.0	20.89	430.1	21.41	442.2	21.79
		101.6	313.5	12.27	339.6	14.55	369.8	16.94	402.0	19.08	414.0	19.54	430.1	20.05	442.2	20.43
		126.8	313.5	11.93	339.6	14.23	369.8	16.60	402.0	18.71	414.0	19.18	430.1	19.67	442.2	19.92
	85	40.5	313.5	16.59	339.6	19.28	369.8	22.45	402.0	25.29	414.0	25.89	430.1	26.52	442.2	26.99
		52.8	313.5	16.26	339.6	18.97	369.8	22.09	402.0	24.88	414.0	25.47	430.1	26.10	442.2	26.57
		101.6	313.5	14.95	339.6	17.73	369.8	20.66	402.0	23.26	414.0	23.82	430.1	24.44	442.2	24.90
		126.8	313.5	14.54	339.6	17.35	369.8	20.23	402.0	22.80	414.0	23.38	430.1	23.98	442.2	24.28
	95	40.5	292.1	17.24	316.4	20.04	344.6	23.35	374.5	26.28	385.8	26.91	400.7	27.56	412.0	28.06
		52.8	292.1	16.90	316.4	19.72	344.6	22.97	374.5	25.86	385.8	26.48	400.7	27.13	412.0	27.62
		101.6	292.1	15.55	316.4	18.44	344.6	21.48	374.5	24.18	385.8	24.77	400.7	25.41	412.0	25.89
		126.8	292.1	15.12	316.4	18.04	344.6	21.03	374.5	23.71	385.8	24.31	400.7	24.93	412.0	25.24
	104	40.5	270.7	18.95	293.2	22.02	319.3	25.64	347.1	28.87	357.5	29.56	371.4	30.29	381.8	30.82
		52.8	270.7	18.57	293.2	21.66	319.3	25.23	347.1	28.41	357.5	29.09	371.4	29.81	381.8	30.34
		101.6	270.7	17.08	293.2	20.25	319.3	23.59	347.1	26.57	357.5	27.21	371.4	27.91	381.8	28.44
		126.8	270.7	16.61	293.2	19.82	319.3	23.11	347.1	26.04	357.5	26.70	371.4	27.38	381.8	27.72
	113	40.5	249.3	20.65	270.0	23.99	294.0	27.94	319.7	31.47	329.2	32.22	342.1	33.02	351.6	33.58
		52.8	249.3	20.24	270.0	23.60	294.0	27.49	319.7	30.96	329.2	31.70	342.1	32.49	351.6	33.06
		101.6	249.3	18.61	270.0	22.06	294.0	25.70	319.7	28.96	329.2	29.65	342.1	30.41	351.6	30.99
		126.8	249.3	18.10	270.0	21.60	294.0	25.19	319.7	28.37	329.2	29.09	342.1	29.83	351.6	30.20
100	50	40.5	298.1	6.36	322.8	7.39	351.6	8.63	382.2	9.71	393.7	9.94	409.0	10.18	420.4	10.36
		52.8	298.1	6.23	322.8	7.27	351.6	8.49	382.2	9.55	393.7	9.78	409.0	10.01	420.4	10.20
		101.6	298.1	5.73	322.8	6.81	351.6	7.93	382.2	8.94	393.7	9.15	409.0	9.37	420.4	9.54
		126.8	298.1	5.58	322.8	6.66	351.6	7.76	382.2	8.75	393.7	8.99	409.0	9.21	420.4	9.29
	59	40.5	298.1	8.63	322.8	10.03	351.6	11.69	382.2	13.16	393.7	13.48	409.0	13.80	420.4	14.05
		52.8	298.1	8.46	322.8	9.87	351.6	11.50	382.2	12.95	393.7	13.26	409.0	13.58	420.4	13.83
		101.6	298.1	7.78	322.8	9.23	351.6	10.75	382.2	12.11	393.7	12.40	409.0	12.71	420.4	12.94
		126.8	298.1	7.57	322.8	9.03	351.6	10.53	382.2	11.87	393.7	12.17	409.0	12.48	420.4	12.60
	67	40.5	298.1	10.65	322.8	12.38	351.6	14.41	382.2	16.23	393.7	16.62	409.0	17.02	420.4	17.34
		52.8	298.1	10.44	322.8	12.18	351.6	14.18	382.2	15.97	393.7	16.35	409.0	16.75	420.4	17.06
		101.6	298.1	9.60	322.8	11.38	351.6	13.26	382.2	14.93	393.7	15.29	409.0	15.68	420.4	15.96
		126.8	298.1	9.34	322.8	11.14	351.6	12.99	382.2	14.64	393.7	15.00	409.0	15.39	420.4	15.54
	75	40.5	298.1	12.99	322.8	15.10	351.6	17.59	382.2	19.80	393.7	20.27	409.0	20.76	420.4	21.14
		52.8	298.1	12.73	322.8	14.85	351.6	17.30	382.2	19.48	393.7	19.94	409.0	20.43	420.4	20.80
		101.6	298.1	11.71	322.8	13.88	351.6	16.17	382.2	18.21	393.7	18.65	409.0	19.12	420.4	19.47
		126.8	298.1	11.38	322.8	13.59	351.6	15.84	382.2	17.85	393.7	18.30	409.0	18.77	420.4	18.96
	85	40.5	298.1	15.98	322.8	18.56	351.6	21.62	382.2	24.35	393.7	24.93	409.0	25.54	420.4	26.00
		52.8	298.1	15.66	322.8	18.26	351.6	21.27	382.2	23.96	393.7	24.53	409.0	25.13	420.4	25.59
		101.6	298.1	14.40	322.8	17.08	351.6	19.89	382.2	22.40	393.7	22.93	409.0	23.52	420.4	23.95
		126.8	298.1	14.00	322.8	16.71	351.6	19.48	382.2	21.96	393.7	22.51	409.0	23.08	420.4	23.32
	95	40.5	283.2	16.87	306.7	19.60	334.0	22.83	363.1	25.71	374.0	26.31	388.5	26.96	399.4	27.45
		52.8	283.2	16.53	306.7	19.28	334.0	22.46	363.1	25.29	374.0	25.89	388.5	26.53	399.4	27.01
		101.6	283.2	15.20	306.7	18.03	334.0	21.00	363.1	23.64	374.0	24.21	388.5	24.83	399.4	25.28
		126.8	283.2	14.78	306.7	17.64	334.0	20.57	363.1	23.18	374.0	23.76	388.5	24.36	399.4	24.61
	104	40.5	268.3	18.92	290.6	21.99	316.5	25.60	344.0	28.83	354.3	29.53	368.1	30.24	378.4	30.79
		52.8	268.3	18.54	290.6	21.63	316.5	25.19	344.0	28.37	354.3	29.05	368.1	29.76	378.4	30.30
		101.6	268.3	17.05	290.6	20.22	316.5	23.56	344.0	26.53	354.3	27.16	368.1	27.85	378.4	28.36
		126.8	268.3	16.58	290.6	19.79	316.5	23.07	344.0	26.01	354.3	26.65	368.1	27.33	378.4	27.61
	113	40.5	253.4	20.97	274.5	24.38	299.0	28.37	324.9	31.96	334.6	32.74	347.7	33.53	357.4	34.13
		52.8	253.4	20.55	274.5	23.98	299.0	27.92	324.9	31.45	334.6	32.21	347.7	32.99	357.4	33.59
		101.6	253.4	18.90	274.5	22.41	299.0	26.12	324.9	29.42	334.6	30.11	347.7	30.87	357.4	31.44
		126.8	253.4	18.38	274.5	21.94	299.0	25.57	324.9	28.84	334.6	29.54	347.7	30.30	357.4	30.61

TC = Total Cooling Capacity (MBh).
PI = Power input (KW).
Power input (KW) includes compressor(s) and controls.
Test condition based on 25 feet of equivalent refrigerant piping and no change in elevation between indoor unit and water source unit.

Due to our policy of continuous product innovation, some specifications may change without notification.
©LG Electronics U.S.A., Inc., Englewood Cliffs, NJ. All rights reserved. "LG" is a registered trademark of LG Corp.

PERFORMANCE DATA

Cooling Capacity—ARWB390DA2 / ARWN390DA2 (460 Volt)

Table 16c: Cooling Capacity ARWB390DA2 / ARWN390DA2

Combination Ratio (%) (Capacity index)	Inlet Water Temperature (°F)	Water Flow Rate (gpm)	Indoor Unit Entering Air Wet Bulb Temperature °F													
			57		61		64		67		70		73		76	
			TC MBh	PI kW	TC MBh	PI kW	TC MBh	PI kW	TC MBh	PI kW	TC MBh	PI kW	TC MBh	PI kW	TC MBh	PI kW
90	50	40.5	268.3	5.49	290.6	6.37	316.5	7.42	344.0	8.36	354.3	8.54	368.1	8.76	378.4	8.91
		52.8	268.3	5.38	290.6	6.27	316.5	7.30	344.0	8.23	354.3	8.41	368.1	8.62	378.4	8.77
		101.6	268.3	4.95	290.6	5.87	316.5	6.83	344.0	7.69	354.3	7.87	368.1	8.06	378.4	8.22
		126.8	268.3	4.81	290.6	5.74	316.5	6.70	344.0	7.54	354.3	7.71	368.1	7.92	378.4	8.00
	59	40.5	268.3	7.44	290.6	8.64	316.5	10.06	344.0	11.33	354.3	11.60	368.1	11.88	378.4	12.09
		52.8	268.3	7.29	290.6	8.50	316.5	9.90	344.0	11.15	354.3	11.41	368.1	11.69	378.4	11.90
		101.6	268.3	6.70	290.6	7.95	316.5	9.26	344.0	10.42	354.3	10.67	368.1	10.94	378.4	11.14
		126.8	268.3	6.52	290.6	7.78	316.5	9.07	344.0	10.22	354.3	10.47	368.1	10.74	378.4	10.85
	67	40.5	268.3	9.17	290.6	10.65	316.5	12.41	344.0	13.98	354.3	14.31	368.1	14.65	378.4	14.92
		52.8	268.3	8.99	290.6	10.48	316.5	12.21	344.0	13.75	354.3	14.08	368.1	14.42	378.4	14.68
		101.6	268.3	8.26	290.6	9.80	316.5	11.42	344.0	12.85	354.3	13.16	368.1	13.50	378.4	13.74
		126.8	268.3	8.04	290.6	9.59	316.5	11.18	344.0	12.60	354.3	12.92	368.1	13.25	378.4	13.38
	75	40.5	268.3	11.18	290.6	12.99	316.5	15.14	344.0	17.05	354.3	17.45	368.1	17.88	378.4	18.20
		52.8	268.3	10.96	290.6	12.78	316.5	14.89	344.0	16.77	354.3	17.17	368.1	17.59	378.4	17.91
		101.6	268.3	10.08	290.6	11.95	316.5	13.92	344.0	15.68	354.3	16.05	368.1	16.46	378.4	16.76
		126.8	268.3	9.80	290.6	11.70	316.5	13.63	344.0	15.37	354.3	15.75	368.1	16.15	378.4	16.32
	85	40.5	268.3	13.75	290.6	15.98	316.5	18.61	344.0	20.96	354.3	21.46	368.1	21.98	378.4	22.38
		52.8	268.3	13.48	290.6	15.72	316.5	18.31	344.0	20.62	354.3	21.11	368.1	21.63	378.4	22.02
		101.6	268.3	12.40	290.6	14.70	316.5	17.12	344.0	19.28	354.3	19.74	368.1	20.25	378.4	20.61
		126.8	268.3	12.05	290.6	14.39	316.5	16.77	344.0	18.90	354.3	19.37	368.1	19.87	378.4	20.07
	95	40.5	260.9	14.84	282.5	17.24	307.7	20.09	334.4	22.62	344.5	23.15	357.8	23.72	367.9	24.14
		52.8	260.9	14.54	282.5	16.96	307.7	19.76	334.4	22.25	344.5	22.78	357.8	23.34	367.9	23.76
		101.6	260.9	13.37	282.5	15.86	307.7	18.47	334.4	20.80	344.5	21.30	357.8	21.84	367.9	22.24
		126.8	260.9	13.00	282.5	15.52	307.7	18.09	334.4	20.39	344.5	20.90	357.8	21.44	367.9	21.65
	104	40.5	253.4	17.04	274.4	19.80	298.9	23.07	324.9	25.98	334.6	26.60	347.6	27.24	357.4	27.74
		52.8	253.4	16.70	274.4	19.48	298.9	22.70	324.9	25.56	334.6	26.17	347.6	26.81	357.4	27.30
		101.6	253.4	15.36	274.4	18.22	298.9	21.22	324.9	23.90	334.6	24.47	347.6	25.09	357.4	25.55
		126.8	253.4	14.94	274.4	17.83	298.9	20.78	324.9	23.43	334.6	24.01	347.6	24.62	357.4	24.87
	113	40.5	245.9	19.24	266.3	22.36	290.1	26.06	315.4	29.34	324.7	30.04	337.4	30.77	346.9	31.34
		52.8	245.9	18.86	266.3	22.00	290.1	25.64	315.4	28.87	324.7	29.56	337.4	30.28	346.9	30.84
		101.6	245.9	17.35	266.3	20.58	290.1	23.97	315.4	27.00	324.7	27.64	337.4	28.34	346.9	28.86
		126.8	245.9	16.88	266.3	20.14	290.1	23.47	315.4	26.47	324.7	27.12	337.4	27.80	346.9	28.09
80	50	40.5	238.5	4.61	258.3	5.32	281.3	6.23	305.8	7.00	314.9	7.18	327.2	7.34	336.3	7.48
		52.8	238.5	4.51	258.3	5.24	281.3	6.13	305.8	6.89	314.9	7.06	327.2	7.22	336.3	7.36
		101.6	238.5	4.15	258.3	4.92	281.3	5.72	305.8	6.45	314.9	6.61	327.2	6.76	336.3	6.89
		126.8	238.5	4.02	258.3	4.81	281.3	5.61	305.8	6.33	314.9	6.47	327.2	6.64	336.3	6.69
	59	40.5	238.5	6.23	258.3	7.24	281.3	8.44	305.8	9.49	314.9	9.73	327.2	9.96	336.3	10.14
		52.8	238.5	6.11	258.3	7.12	281.3	8.30	305.8	9.34	314.9	9.57	327.2	9.80	336.3	9.98
		101.6	238.5	5.62	258.3	6.66	281.3	7.76	305.8	8.74	314.9	8.95	327.2	9.17	336.3	9.34
		126.8	238.5	5.46	258.3	6.52	281.3	7.60	305.8	8.57	314.9	8.78	327.2	9.00	336.3	9.09
	67	40.5	238.5	7.68	258.3	8.94	281.3	10.40	305.8	11.71	314.9	11.99	327.2	12.29	336.3	12.51
		52.8	238.5	7.53	258.3	8.79	281.3	10.23	305.8	11.52	314.9	11.80	327.2	12.09	336.3	12.31
		101.6	238.5	6.93	258.3	8.21	281.3	9.57	305.8	10.78	314.9	11.03	327.2	11.31	336.3	11.52
		126.8	238.5	6.74	258.3	8.04	281.3	9.37	305.8	10.56	314.9	10.83	327.2	11.10	336.3	11.22
	75	40.5	238.5	9.38	258.3	10.88	281.3	12.68	305.8	14.28	314.9	14.63	327.2	14.98	336.3	15.25
		52.8	238.5	9.19	258.3	10.71	281.3	12.48	305.8	14.05	314.9	14.39	327.2	14.74	336.3	15.01
		101.6	238.5	8.45	258.3	10.02	281.3	11.67	305.8	13.14	314.9	13.45	327.2	13.80	336.3	14.05
		126.8	238.5	8.21	258.3	9.80	281.3	11.43	305.8	12.88	314.9	13.20	327.2	13.54	336.3	13.68
	85	40.5	238.5	11.53	258.3	13.40	281.3	15.60	305.8	17.58	314.9	17.99	327.2	18.42	336.3	18.76
		52.8	238.5	11.30	258.3	13.18	281.3	15.35	305.8	17.29	314.9	17.70	327.2	18.13	336.3	18.46
		101.6	238.5	10.39	258.3	12.32	281.3	14.35	305.8	16.16	314.9	16.55	327.2	16.97	336.3	17.28
		126.8	238.5	10.10	258.3	12.06	281.3	14.06	305.8	15.85	314.9	16.24	327.2	16.66	336.3	16.82
	95	40.5	238.5	12.80	258.3	14.88	281.3	17.34	305.8	19.53	314.9	19.99	327.2	20.48	336.3	20.84
		52.8	238.5	12.55	258.3	14.64	281.3	17.06	305.8	19.21	314.9	19.67	327.2	20.15	336.3	20.51
		101.6	238.5	11.55	258.3	13.69	281.3	15.95	305.8	17.96	314.9	18.39	327.2	18.86	336.3	19.20
		126.8	238.5	11.23	258.3	13.40	281.3	15.62	305.8	17.61	314.9	18.04	327.2	18.51	336.3	18.69
	104	40.5	238.5	15.17	258.3	17.63	281.3	20.53	305.8	23.12	314.9	23.67	327.2	24.25	336.3	24.68
		52.8	238.5	14.87	258.3	17.34	281.3	20.20	305.8	22.75	314.9	23.29	327.2	23.86	336.3	24.29
		101.6	238.5	13.67	258.3	16.21	281.3	18.89	305.8	21.27	314.9	21.77	327.2	22.33	336.3	22.73
		126.8	238.5	13.29	258.3	15.87	281.3	18.50	305.8	20.85	314.9	21.37	327.2	21.92	336.3	22.14
	113	40.5	238.5	17.54	258.3	20.37	281.3	23.72	305.8	26.72	314.9	27.35	327.2	28.02	336.3	28.53
		52.8	238.5	17.19	258.3	20.04	281.3	23.34	305.8	26.29	314.9	26.91	327.2	27.57	336.3	28.07
		101.6	238.5	15.79	258.3	18.73	281.3	21.83	305.8	24.58	314.9	25.15	327.2	25.80	336.3	26.26
		126.8	238.5	15.35	258.3	18.34	281.3	21.38	305.8	24.09	314.9	24.70	327.2	25.33	336.3	25.59

TC = Total Cooling Capacity (MBh).
PI = Power input (KW).
Power input (KW) includes compressor(s) and controls.
Test condition based on 25 feet of equivalent refrigerant piping and no change in elevation between indoor unit and water source unit.

LG

Due to our policy of continuous product innovation, some specifications may change without notification.
©LG Electronics U.S.A., Inc., Englewood Cliffs, NJ. All rights reserved. "LG" is a registered trademark of LG Corp.

PERFORMANCE DATA

Cooling Capacity—ARWB390DA2 / ARWN390DA2 (460 Volt)

Table 16d: Cooling Capacity ARWB390DA2 / ARWN390DA2

Combination Ratio (%) (Capacity index)	Inlet Water Temperature (°F)	Water Flow Rate (gpm)	Indoor Unit Entering Air Wet Bulb Temperature °F													
			57		61		64		67		70		73		76	
			TC MBh	PI kW	TC MBh	PI kW	TC MBh	PI kW	TC MBh	PI kW	TC MBh	PI kW	TC MBh	PI kW	TC MBh	PI kW
70	50	40.5	208.7	3.83	226.0	4.44	246.1	5.17	267.5	5.83	275.6	5.95	286.3	6.11	294.3	6.23
		52.8	208.7	3.75	226.0	4.37	246.1	5.09	267.5	5.73	275.6	5.86	286.3	6.01	294.3	6.13
		101.6	208.7	3.44	226.0	4.09	246.1	4.75	267.5	5.35	275.6	5.49	286.3	5.63	294.3	5.71
		126.8	208.7	3.35	226.0	4.00	246.1	4.67	267.5	5.25	275.6	5.39	286.3	5.53	294.3	5.57
	59	40.5	208.7	5.18	226.0	6.02	246.1	7.01	267.5	7.90	275.6	8.08	286.3	8.28	294.3	8.44
		52.8	208.7	5.08	226.0	5.92	246.1	6.90	267.5	7.77	275.6	7.95	286.3	8.15	294.3	8.30
		101.6	208.7	4.67	226.0	5.54	246.1	6.45	267.5	7.26	275.6	7.44	286.3	7.63	294.3	7.76
		126.8	208.7	4.54	226.0	5.42	246.1	6.32	267.5	7.12	275.6	7.30	286.3	7.49	294.3	7.56
	67	40.5	208.7	6.39	226.0	7.42	246.1	8.65	267.5	9.74	275.6	9.97	286.3	10.21	294.3	10.39
		52.8	208.7	6.26	226.0	7.30	246.1	8.51	267.5	9.58	275.6	9.81	286.3	10.05	294.3	10.23
		101.6	208.7	5.76	226.0	6.83	246.1	7.96	267.5	8.96	275.6	9.17	286.3	9.41	294.3	9.58
		126.8	208.7	5.60	226.0	6.68	246.1	7.79	267.5	8.78	275.6	9.00	286.3	9.23	294.3	9.33
	75	40.5	208.7	7.80	226.0	9.06	246.1	10.55	267.5	11.87	275.6	12.15	286.3	12.46	294.3	12.68
		52.8	208.7	7.64	226.0	8.91	246.1	10.38	267.5	11.68	275.6	11.96	286.3	12.26	294.3	12.48
		101.6	208.7	7.02	226.0	8.33	246.1	9.70	267.5	10.93	275.6	11.19	286.3	11.47	294.3	11.68
		126.8	208.7	6.83	226.0	8.15	246.1	9.50	267.5	10.71	275.6	10.98	286.3	11.26	294.3	11.37
	85	40.5	208.7	9.58	226.0	11.14	246.1	12.97	267.5	14.60	275.6	14.96	286.3	15.33	294.3	15.60
		52.8	208.7	9.39	226.0	10.96	246.1	12.76	267.5	14.37	275.6	14.72	286.3	15.08	294.3	15.35
		101.6	208.7	8.64	226.0	10.24	246.1	11.93	267.5	13.44	275.6	13.76	286.3	14.11	294.3	14.37
		126.8	208.7	8.40	226.0	10.03	246.1	11.69	267.5	13.17	275.6	13.50	286.3	13.85	294.3	13.99
	95	40.5	208.7	10.65	226.0	12.37	246.1	14.41	267.5	16.23	275.6	16.62	286.3	17.02	294.3	17.33
		52.8	208.7	10.44	226.0	12.17	246.1	14.18	267.5	15.97	275.6	16.35	286.3	16.75	294.3	17.05
		101.6	208.7	9.60	226.0	11.38	246.1	13.26	267.5	14.93	275.6	15.29	286.3	15.68	294.3	15.96
		126.8	208.7	9.33	226.0	11.14	246.1	12.99	267.5	14.64	275.6	15.00	286.3	15.39	294.3	15.54
	104	40.5	208.7	12.61	226.0	14.66	246.1	17.07	267.5	19.22	275.6	19.68	286.3	20.16	294.3	20.53
		52.8	208.7	12.36	226.0	14.42	246.1	16.79	267.5	18.91	275.6	19.36	286.3	19.84	294.3	20.20
		101.6	208.7	11.37	226.0	13.48	246.1	15.70	267.5	17.68	275.6	18.10	286.3	18.57	294.3	18.90
		126.8	208.7	11.05	226.0	13.19	246.1	15.38	267.5	17.33	275.6	17.77	286.3	18.22	294.3	18.40
	113	40.5	208.7	14.57	226.0	16.95	246.1	19.72	267.5	22.21	275.6	22.74	286.3	23.30	294.3	23.73
		52.8	208.7	14.28	226.0	16.67	246.1	19.40	267.5	21.85	275.6	22.37	286.3	22.93	294.3	23.35
		101.6	208.7	13.14	226.0	15.58	246.1	18.14	267.5	20.43	275.6	20.91	286.3	21.46	294.3	21.84
		126.8	208.7	12.77	226.0	15.24	246.1	17.77	267.5	20.02	275.6	20.54	286.3	21.05	294.3	21.26
60	50	40.5	178.9	3.06	193.7	3.54	211.0	4.13	229.3	4.63	236.2	4.75	245.4	4.88	252.3	4.94
		52.8	178.9	2.99	193.7	3.48	211.0	4.06	229.3	4.56	236.2	4.68	245.4	4.80	252.3	4.87
		101.6	178.9	2.74	193.7	3.25	211.0	3.79	229.3	4.27	236.2	4.38	245.4	4.48	252.3	4.57
		126.8	178.9	2.68	193.7	3.18	211.0	3.72	229.3	4.20	236.2	4.29	245.4	4.41	252.3	4.46
	59	40.5	178.9	4.13	193.7	4.80	211.0	5.59	229.3	6.29	236.2	6.44	245.4	6.61	252.3	6.72
		52.8	178.9	4.05	193.7	4.72	211.0	5.50	229.3	6.19	236.2	6.34	245.4	6.50	252.3	6.61
		101.6	178.9	3.72	193.7	4.41	211.0	5.14	229.3	5.79	236.2	5.93	245.4	6.08	252.3	6.19
		126.8	178.9	3.62	193.7	4.32	211.0	5.04	229.3	5.68	236.2	5.82	245.4	5.97	252.3	6.03
	67	40.5	178.9	5.09	193.7	5.92	211.0	6.89	229.3	7.77	236.2	7.95	245.4	8.14	252.3	8.29
		52.8	178.9	4.99	193.7	5.82	211.0	6.78	229.3	7.64	236.2	7.82	245.4	8.01	252.3	8.16
		101.6	178.9	4.59	193.7	5.44	211.0	6.34	229.3	7.14	236.2	7.31	245.4	7.50	252.3	7.63
		126.8	178.9	4.46	193.7	5.33	211.0	6.21	229.3	7.00	236.2	7.18	245.4	7.36	252.3	7.43
	75	40.5	178.9	6.21	193.7	7.22	211.0	8.41	229.3	9.47	236.2	9.70	245.4	9.93	252.3	10.11
		52.8	178.9	6.09	193.7	7.10	211.0	8.27	229.3	9.32	236.2	9.54	245.4	9.77	252.3	9.95
		101.6	178.9	5.60	193.7	6.64	211.0	7.73	229.3	8.71	236.2	8.92	245.4	9.15	252.3	9.31
		126.8	178.9	5.44	193.7	6.50	211.0	7.58	229.3	8.54	236.2	8.75	245.4	8.97	252.3	9.07
	85	40.5	178.9	7.64	193.7	8.87	211.0	10.34	229.3	11.65	236.2	11.92	245.4	12.21	252.3	12.44
		52.8	178.9	7.49	193.7	8.73	211.0	10.17	229.3	11.46	236.2	11.73	245.4	12.02	252.3	12.24
		101.6	178.9	6.89	193.7	8.17	211.0	9.51	229.3	10.71	236.2	10.97	245.4	11.25	252.3	11.45
		126.8	178.9	6.70	193.7	7.99	211.0	9.32	229.3	10.50	236.2	10.76	245.4	11.04	252.3	11.15
	95	40.5	178.9	8.49	193.7	9.87	211.0	11.50	229.3	12.94	236.2	13.24	245.4	13.56	252.3	13.82
		52.8	178.9	8.32	193.7	9.71	211.0	11.31	229.3	12.73	236.2	13.03	245.4	13.35	252.3	13.60
		101.6	178.9	7.65	193.7	9.07	211.0	10.57	229.3	11.90	236.2	12.19	245.4	12.50	252.3	12.72
		126.8	178.9	7.44	193.7	8.88	211.0	10.35	229.3	11.67	236.2	11.96	245.4	12.27	252.3	12.39
	104	40.5	178.9	10.05	193.7	11.68	211.0	13.61	229.3	15.33	236.2	15.70	245.4	16.07	252.3	16.36
		52.8	178.9	9.85	193.7	11.49	211.0	13.39	229.3	15.08	236.2	15.44	245.4	15.81	252.3	16.10
		101.6	178.9	9.06	193.7	10.75	211.0	12.52	229.3	14.10	236.2	14.43	245.4	14.80	252.3	15.07
		126.8	178.9	8.81	193.7	10.52	211.0	12.26	229.3	13.82	236.2	14.16	245.4	14.53	252.3	14.67
	113	40.5	178.9	11.61	193.7	13.48	211.0	15.72	229.3	17.72	236.2	18.15	245.4	18.57	252.3	18.90
		52.8	178.9	11.38	193.7	13.27	211.0	15.47	229.3	17.43	236.2	17.85	245.4	18.27	252.3	18.60
		101.6	178.9	10.47	193.7	12.43	211.0	14.47	229.3	16.30	236.2	16.67	245.4	17.10	252.3	17.42
		126.8	178.9	10.18	193.7	12.16	211.0	14.17	229.3	15.97	236.2	16.36	245.4	16.79	252.3	16.95

TC = Total Cooling Capacity (MBh).
PI = Power input (KW).
Power input (KW) includes compressor(s) and controls.
Test condition based on 25 feet of equivalent refrigerant piping and no change in elevation between indoor unit and water source unit.

Due to our policy of continuous product innovation, some specifications may change without notification.
©LG Electronics U.S.A., Inc., Englewood Cliffs, NJ. All rights reserved. "LG" is a registered trademark of LG Corp.

PERFORMANCE DATA

Cooling Capacity—ARWB390DA2 / ARWN390DA2 (460 Volt)

Table 16e: Cooling Capacity ARWB390DA2 / ARWN390DA2

Combination Ratio (%) (Capacity index)	Inlet Water Temperature (°F)	Water Flow Rate (gpm)	Indoor Unit Entering Air Wet Bulb Temperature °F													
			57		61		64		67		70		73		76	
			TC	PI	TC	PI	TC	PI	TC	PI	TC	PI	TC	PI	TC	PI
			MBh	kW	MBh	kW	MBh	kW	MBh	kW	MBh	kW	MBh	kW	MBh	kW
50	50	40.5	149.1	2.28	161.4	2.64	175.8	3.07	191.1	3.46	196.8	3.55	204.5	3.63	210.2	3.69
		52.8	149.1	2.23	161.4	2.60	175.8	3.02	191.1	3.41	196.8	3.49	204.5	3.57	210.2	3.64
		101.6	149.1	2.06	161.4	2.42	175.8	2.82	191.1	3.18	196.8	3.26	204.5	3.34	210.2	3.42
		126.8	149.1	1.99	161.4	2.38	175.8	2.78	191.1	3.12	196.8	3.20	204.5	3.28	210.2	3.31
	59	40.5	149.1	3.08	161.4	3.58	175.8	4.17	191.1	4.70	196.8	4.81	204.5	4.92	210.2	5.01
		52.8	149.1	3.02	161.4	3.52	175.8	4.10	191.1	4.62	196.8	4.73	204.5	4.84	210.2	4.93
		101.6	149.1	2.78	161.4	3.29	175.8	3.83	191.1	4.32	196.8	4.42	204.5	4.53	210.2	4.62
		126.8	149.1	2.70	161.4	3.22	175.8	3.76	191.1	4.23	196.8	4.34	204.5	4.45	210.2	4.49
	67	40.5	149.1	3.80	161.4	4.41	175.8	5.14	191.1	5.79	196.8	5.93	204.5	6.07	210.2	6.18
		52.8	149.1	3.72	161.4	4.34	175.8	5.06	191.1	5.70	196.8	5.83	204.5	5.97	210.2	6.08
		101.6	149.1	3.42	161.4	4.06	175.8	4.73	191.1	5.33	196.8	5.45	204.5	5.59	210.2	5.69
		126.8	149.1	3.33	161.4	3.97	175.8	4.63	191.1	5.22	196.8	5.35	204.5	5.49	210.2	5.54
	75	40.5	149.1	4.63	161.4	5.38	175.8	6.27	191.1	7.07	196.8	7.23	204.5	7.41	210.2	7.54
		52.8	149.1	4.54	161.4	5.29	175.8	6.17	191.1	6.95	196.8	7.11	204.5	7.29	210.2	7.42
		101.6	149.1	4.17	161.4	4.95	175.8	5.77	191.1	6.49	196.8	6.65	204.5	6.82	210.2	6.94
		126.8	149.1	4.06	161.4	4.84	175.8	5.65	191.1	6.37	196.8	6.53	204.5	6.69	210.2	6.76
	85	40.5	149.1	5.69	161.4	6.62	175.8	7.72	191.1	8.68	196.8	8.89	204.5	9.10	210.2	9.27
		52.8	149.1	5.58	161.4	6.51	175.8	7.59	191.1	8.54	196.8	8.75	204.5	8.96	210.2	9.12
		101.6	149.1	5.13	161.4	6.09	175.8	7.09	191.1	7.99	196.8	8.18	204.5	8.39	210.2	8.54
		126.8	149.1	4.99	161.4	5.96	175.8	6.95	191.1	7.83	196.8	8.03	204.5	8.23	210.2	8.31
	95	40.5	149.1	6.32	161.4	7.36	175.8	8.57	191.1	9.64	196.8	9.88	204.5	10.12	210.2	10.30
		52.8	149.1	6.20	161.4	7.24	175.8	8.43	191.1	9.49	196.8	9.72	204.5	9.96	210.2	10.14
		101.6	149.1	5.71	161.4	6.77	175.8	7.88	191.1	8.88	196.8	9.09	204.5	9.32	210.2	9.49
		126.8	149.1	5.55	161.4	6.62	175.8	7.72	191.1	8.70	196.8	8.92	204.5	9.15	210.2	9.24
	104	40.5	149.1	7.50	161.4	8.71	175.8	10.14	191.1	11.42	196.8	11.70	204.5	11.98	210.2	12.19
		52.8	149.1	7.35	161.4	8.57	175.8	9.98	191.1	11.24	196.8	11.51	204.5	11.79	210.2	12.00
		101.6	149.1	6.76	161.4	8.01	175.8	9.33	191.1	10.51	196.8	10.76	204.5	11.04	210.2	11.24
		126.8	149.1	6.57	161.4	7.84	175.8	9.14	191.1	10.30	196.8	10.56	204.5	10.83	210.2	10.94
	113	40.5	149.1	8.67	161.4	10.06	175.8	11.72	191.1	13.20	196.8	13.52	204.5	13.84	210.2	14.08
		52.8	149.1	8.50	161.4	9.90	175.8	11.53	191.1	12.99	196.8	13.30	204.5	13.62	210.2	13.86
		101.6	149.1	7.81	161.4	9.25	175.8	10.78	191.1	12.14	196.8	12.43	204.5	12.76	210.2	12.99
		126.8	149.1	7.59	161.4	9.06	175.8	10.56	191.1	11.90	196.8	12.20	204.5	12.51	210.2	12.64

TC = Total Cooling Capacity (MBh).
PI = Power input (KW).
Power input (KW) includes compressor(s) and controls.
Test condition based on 25 feet of equivalent refrigerant piping and no change in elevation between indoor unit and water source unit.

Due to our policy of continuous product innovation, some specifications may change without notification.
©LG Electronics U.S.A., Inc., Englewood Cliffs, NJ. All rights reserved. "LG" is a registered trademark of LG Corp.

PERFORMANCE DATA

Cooling Capacity—ARWB480DA2 / ARWN480DA2 (460 Volt)

Table 17a: Cooling Capacity ARWB480DA2 / ARWN480DA2

Combination Ratio (%) (Capacity index)	Inlet Water Temperature (°F)	Water Flow Rate (gpm)	Indoor Unit Entering Air Wet Bulb Temperature °F													
			57		61		64		67		70		73		76	
			TC	PI	TC	PI	TC	PI	TC	PI	TC	PI	TC	PI	TC	PI
			MBh	kW	MBh	kW	MBh	kW	MBh	kW	MBh	kW	MBh	kW	MBh	kW
130	50	66.0	444.0	9.3	480.8	10.8	523.7	12.6	569.2	14.2	586.2	14.5	609.1	14.9	626.1	15.1
		127.0	444.0	8.5	480.8	10.1	523.7	11.8	569.2	13.3	586.2	13.6	609.1	14.0	626.1	14.2
		158.5	444.0	8.3	480.8	9.9	523.7	11.5	569.2	13.0	586.2	13.3	609.1	13.7	626.1	13.9
	59	66.0	436.9	12.2	473.1	14.2	515.3	16.5	560.1	18.6	576.9	19.1	599.3	19.5	616.1	19.9
		127.0	436.9	11.2	473.1	13.3	515.3	15.5	560.1	17.4	576.9	17.8	599.3	18.3	616.1	18.7
		158.5	436.9	10.9	473.1	13.0	515.3	15.1	560.1	17.1	576.9	17.5	599.3	18.0	616.1	18.3
	67	66.0	430.6	14.8	466.3	17.2	507.8	20.0	552.0	22.6	568.6	23.1	590.6	23.7	607.2	24.1
		127.0	430.6	13.6	466.3	16.1	507.8	18.7	552.0	21.1	568.6	21.6	590.6	22.2	607.2	22.6
		158.5	430.6	13.2	466.3	15.7	507.8	18.4	552.0	20.7	568.6	21.2	590.6	21.8	607.2	22.1
	75	66.0	430.6	18.2	466.3	21.2	507.8	24.7	552.0	27.8	568.6	28.5	590.6	29.2	607.2	29.7
		127.0	430.6	16.7	466.3	19.8	507.8	23.1	552.0	26.0	568.6	26.7	590.6	27.4	607.2	27.9
		158.5	430.6	16.3	466.3	19.4	507.8	22.6	552.0	25.5	568.6	26.2	590.6	26.8	607.2	27.3
	85	66.0	430.6	21.8	466.3	25.5	507.8	29.7	552.0	33.4	568.6	34.2	590.6	35.0	607.2	35.7
		127.0	430.6	20.1	466.3	23.8	507.8	27.7	552.0	31.2	568.6	32.0	590.6	32.9	607.2	33.5
		158.5	430.6	19.5	466.3	23.3	507.8	27.2	552.0	30.6	568.6	31.4	590.6	32.2	607.2	32.8
	95	66.0	387.5	22.1	419.6	25.8	457.1	30.0	496.8	33.8	511.7	34.6	531.6	35.4	546.5	36.1
		127.0	387.5	20.3	419.6	24.1	457.1	28.0	496.8	31.6	511.7	32.4	531.6	33.2	546.5	33.9
		158.5	387.5	19.7	419.6	23.6	457.1	27.5	496.8	31.0	511.7	31.8	531.6	32.6	546.5	33.1
	104	66.0	344.4	23.3	373.0	27.2	406.3	31.6	441.6	35.6	454.8	36.5	472.5	37.4	485.8	38.0
		127.0	344.4	21.4	373.0	25.4	406.3	29.6	441.6	33.3	454.8	34.1	472.5	35.0	485.8	35.7
		158.5	344.4	20.8	373.0	24.9	406.3	29.0	441.6	32.7	454.8	33.5	472.5	34.4	485.8	34.9
	113	66.0	301.3	24.5	326.4	28.6	355.5	33.3	386.4	37.5	397.9	38.4	413.4	39.3	425.1	40.0
		127.0	301.3	22.5	326.4	26.7	355.5	31.1	386.4	35.0	397.9	35.9	413.4	36.9	425.1	37.6
		158.5	301.3	21.9	326.4	26.1	355.5	30.5	386.4	34.3	397.9	35.2	413.4	36.1	425.1	36.8
120	50	66.0	420.2	8.8	455.2	10.3	495.7	11.9	538.8	13.4	555.0	13.7	576.5	14.1	592.5	14.4
		127.0	420.2	8.1	455.2	9.6	495.7	11.2	538.8	12.6	555.0	12.9	576.5	13.2	592.5	13.5
		158.5	420.2	7.9	455.2	9.4	495.7	10.9	538.8	12.3	555.0	12.6	576.5	13.0	592.5	13.2
	59	66.0	415.5	11.6	450.0	13.6	490.1	15.8	532.7	17.8	548.7	18.2	570.0	18.7	585.9	19.0
		127.0	415.5	10.7	450.0	12.7	490.1	14.8	532.7	16.7	548.7	17.1	570.0	17.5	585.9	17.9
		158.5	415.5	10.4	450.0	12.4	490.1	14.5	532.7	16.3	548.7	16.7	570.0	17.2	585.9	17.4
	67	66.0	411.3	14.2	445.4	16.5	485.1	19.3	527.3	21.7	543.1	22.2	564.2	22.8	580.0	23.2
		127.0	411.3	13.0	445.4	15.5	485.1	18.0	527.3	20.3	543.1	20.8	564.2	21.3	580.0	21.8
		158.5	411.3	12.7	445.4	15.1	485.1	17.7	527.3	19.9	543.1	20.4	564.2	20.9	580.0	21.2
	75	66.0	411.3	17.4	445.4	20.3	485.1	23.7	527.3	26.7	543.1	27.3	564.2	28.0	580.0	28.5
		127.0	411.3	16.0	445.4	19.0	485.1	22.1	527.3	24.9	543.1	25.6	564.2	26.2	580.0	26.7
		158.5	411.3	15.6	445.4	18.6	485.1	21.7	527.3	24.5	543.1	25.1	564.2	25.7	580.0	26.1
	85	66.0	411.3	21.1	445.4	24.6	485.1	28.6	527.3	32.3	543.1	33.0	564.2	33.8	580.0	34.4
		127.0	411.3	19.4	445.4	23.0	485.1	26.8	527.3	30.2	543.1	30.9	564.2	31.7	580.0	32.3
		158.5	411.3	18.9	445.4	22.5	485.1	26.2	527.3	29.6	543.1	30.3	564.2	31.1	580.0	31.6
	95	66.0	376.4	21.6	407.6	25.2	443.9	29.4	482.5	33.1	497.0	33.8	516.3	34.7	530.8	35.3
		127.0	376.4	19.9	407.6	23.6	443.9	27.4	482.5	30.9	497.0	31.7	516.3	32.5	530.8	33.1
		158.5	376.4	19.3	407.6	23.1	443.9	26.9	482.5	30.3	497.0	31.1	516.3	31.9	530.8	32.3
	104	66.0	341.4	23.3	369.8	27.1	402.7	31.6	437.7	35.6	450.9	36.4	468.4	37.3	481.5	38.0
		127.0	341.4	21.4	369.8	25.4	402.7	29.5	437.7	33.3	450.9	34.1	468.4	35.0	481.5	35.6
		158.5	341.4	20.8	369.8	24.8	402.7	28.9	437.7	32.6	450.9	33.4	468.4	34.3	481.5	34.8
	113	66.0	306.4	24.9	332.0	29.0	361.5	33.8	392.9	38.1	404.8	39.0	420.5	40.0	432.2	40.7
		127.0	306.4	22.9	332.0	27.1	361.5	31.6	392.9	35.6	404.8	36.5	420.5	37.5	432.2	38.2
		158.5	306.4	22.3	332.0	26.6	361.5	31.0	392.9	34.9	404.8	35.8	420.5	36.7	432.2	37.3

TC = Total Cooling Capacity (MBh).
PI = Power input (KW).
Power input (KW) includes compressor(s) and controls.
Test condition based on 25 feet of equivalent refrigerant piping and no change in elevation between indoor unit and water source unit.

Due to our policy of continuous product innovation, some specifications may change without notification.
©LG Electronics U.S.A., Inc., Englewood Cliffs, NJ. All rights reserved. "LG" is a registered trademark of LG Corp.

PERFORMANCE DATA

Cooling Capacity—ARWB480DA2 / ARWN480DA2 (460 Volt)

Table 17b: Cooling Capacity ARWB480DA2 / ARWN480DA2

Combination Ratio (%) (Capacity index)	Inlet Water Temperature (°F)	Water Flow Rate (gpm)	Indoor Unit Entering Air Wet Bulb Temperature °F													
			57		61		64		67		70		73		76	
			TC	PI	TC	PI	TC	PI	TC	PI	TC	PI	TC	PI	TC	PI
			MBh	kW	MBh	kW	MBh	kW	MBh	kW	MBh	kW	MBh	kW	MBh	kW
110	50	66.0	396.5	8.3	429.4	9.7	467.6	11.3	508.2	12.7	523.6	13.0	543.9	13.3	559.2	13.5
		127.0	396.5	7.6	429.4	9.0	467.6	10.5	508.2	11.9	523.6	12.2	543.9	12.5	559.2	12.7
		158.5	396.5	7.4	429.4	8.9	467.6	10.3	508.2	11.6	523.6	11.9	543.9	12.2	559.2	12.4
	59	66.0	394.1	11.1	426.8	13.0	464.8	15.1	505.2	17.0	520.4	17.4	540.6	17.8	555.8	18.2
		127.0	394.1	10.2	426.8	12.1	464.8	14.1	505.2	15.9	520.4	16.3	540.6	16.7	555.8	17.0
		158.5	394.1	9.9	426.8	11.9	464.8	13.8	505.2	15.6	520.4	16.0	540.6	16.4	555.8	16.6
	67	66.0	392.0	13.6	424.5	15.9	462.3	18.5	502.5	20.8	517.6	21.3	537.7	21.9	552.8	22.3
		127.0	392.0	12.5	424.5	14.9	462.3	17.3	502.5	19.5	517.6	20.0	537.7	20.5	552.8	20.9
		158.5	392.0	12.2	424.5	14.5	462.3	16.9	502.5	19.1	517.6	19.6	537.7	20.1	552.8	20.3
	75	66.0	392.0	16.7	424.5	19.5	462.3	22.7	502.5	25.5	517.6	26.1	537.7	26.8	552.8	27.2
		127.0	392.0	15.3	424.5	18.2	462.3	21.2	502.5	23.9	517.6	24.4	537.7	25.1	552.8	25.5
		158.5	392.0	14.9	424.5	17.8	462.3	20.7	502.5	23.4	517.6	24.0	537.7	24.6	552.8	24.9
	85	66.0	392.0	20.3	424.5	23.7	462.3	27.6	502.5	31.1	517.6	31.8	537.7	32.6	552.8	33.2
		127.0	392.0	18.7	424.5	22.2	462.3	25.8	502.5	29.1	517.6	29.8	537.7	30.6	552.8	31.1
		158.5	392.0	18.2	424.5	21.7	462.3	25.3	502.5	28.5	517.6	29.2	537.7	30.0	552.8	30.4
	95	66.0	365.2	21.1	395.5	24.7	430.8	28.7	468.2	32.3	482.3	33.1	501.0	33.9	515.0	34.5
		127.0	365.2	19.4	395.5	23.1	430.8	26.8	468.2	30.2	482.3	31.0	501.0	31.8	515.0	32.4
		158.5	365.2	18.9	395.5	22.6	430.8	26.3	468.2	29.6	482.3	30.4	501.0	31.2	515.0	31.6
	104	66.0	338.4	23.2	366.5	27.1	399.2	31.5	433.9	35.5	446.9	36.4	464.3	37.3	477.3	37.9
		127.0	338.4	21.4	366.5	25.3	399.2	29.5	433.9	33.2	446.9	34.0	464.3	34.9	477.3	35.5
		158.5	338.4	20.8	366.5	24.8	399.2	28.9	433.9	32.6	446.9	33.4	464.3	34.2	477.3	34.7
	113	66.0	311.6	25.3	337.5	29.5	367.6	34.4	399.6	38.7	411.5	39.6	427.6	40.6	439.6	41.3
		127.0	311.6	23.3	337.5	27.6	367.6	32.1	399.6	36.2	411.5	37.1	427.6	38.0	439.6	38.7
		158.5	311.6	22.6	337.5	27.0	367.6	31.5	399.6	35.5	411.5	36.4	427.6	37.3	439.6	37.8
100	50	66.0	372.7	7.8	403.6	9.1	439.6	10.6	477.8	11.9	492.1	12.2	511.2	12.5	525.6	12.8
		127.0	372.7	7.2	403.6	8.5	439.6	9.9	477.8	11.2	492.1	11.4	511.2	11.7	525.6	11.9
		158.5	372.7	7.0	403.6	8.3	439.6	9.7	477.8	10.9	492.1	11.2	511.2	11.5	525.6	11.6
	59	66.0	372.7	10.6	403.6	12.3	439.6	14.4	477.8	16.2	492.1	16.6	511.2	17.0	525.6	17.3
		127.0	372.7	9.7	403.6	11.5	439.6	13.4	477.8	15.1	492.1	15.5	511.2	15.9	525.6	16.2
		58.5	372.7	9.5	403.6	11.3	439.6	13.2	477.8	14.8	492.1	15.2	511.2	15.6	525.6	15.8
	67	66.0	372.7	13.1	403.6	15.2	439.6	17.7	477.8	20.0	492.1	20.4	511.2	20.9	525.6	21.3
		127.0	372.7	12.0	403.6	14.2	439.6	16.6	477.8	18.7	492.1	19.1	511.2	19.6	525.6	20.0
		58.5	372.7	11.7	403.6	13.9	439.6	16.2	477.8	18.3	492.1	18.8	511.2	19.2	525.6	19.4
	75	66.0	372.7	15.9	403.6	18.6	439.6	21.6	477.8	24.4	492.1	24.9	511.2	25.5	525.6	26.0
		127.0	372.7	14.6	403.6	17.4	439.6	20.2	477.8	22.8	492.1	23.3	511.2	23.9	525.6	24.3
		58.5	372.7	14.2	403.6	17.0	439.6	19.8	477.8	22.3	492.1	22.9	511.2	23.5	525.6	23.7
	85	66.0	372.7	19.6	403.6	22.8	439.6	26.6	477.8	30.0	492.1	30.7	511.2	31.4	525.6	32.0
		127.0	372.7	18.0	403.6	21.4	439.6	24.9	477.8	28.0	492.1	28.7	511.2	29.4	525.6	29.9
		58.5	372.7	17.5	403.6	20.9	439.6	24.4	477.8	27.5	492.1	28.1	511.2	28.9	525.6	29.2
	95	66.0	354.0	20.7	383.4	24.1	417.6	28.1	453.9	31.6	467.5	32.4	485.7	33.2	499.3	33.8
		127.0	354.0	19.0	383.4	22.5	417.6	26.3	453.9	29.6	467.5	30.3	485.7	31.0	499.3	31.6
		58.5	354.0	18.5	383.4	22.1	417.6	25.7	453.9	29.0	467.5	29.7	485.7	30.5	499.3	30.8
	104	66.0	335.4	23.2	363.2	27.0	395.6	31.5	430.0	35.5	442.9	36.3	460.1	37.2	473.0	37.9
		127.0	335.4	21.3	363.2	25.3	395.6	29.5	430.0	33.2	442.9	34.0	460.1	34.8	473.0	35.5
		58.5	335.4	20.7	363.2	24.7	395.6	28.8	430.0	32.5	442.9	33.3	460.1	34.2	473.0	34.5
	113	66.0	316.8	25.7	343.0	30.0	373.6	34.9	406.1	39.3	418.3	40.3	434.5	41.2	446.7	42.0
		127.0	316.8	23.6	343.0	28.0	373.6	32.7	406.1	36.8	418.3	37.6	434.5	38.6	446.7	39.3
		158.5	316.8	23.0	343.0	27.4	373.6	32.0	406.1	36.0	418.3	36.9	434.5	37.9	446.7	38.3

TC = Total Cooling Capacity (MBh).
PI = Power input (KW).
Power input (KW) includes compressor(s) and controls.
Test condition based on 25 feet of equivalent refrigerant piping and no change in elevation between indoor unit and water source unit.

Due to our policy of continuous product innovation, some specifications may change without notification.
©LG Electronics U.S.A., Inc., Englewood Cliffs, NJ. All rights reserved. "LG" is a registered trademark of LG Corp.

PERFORMANCE DATA

Cooling Capacity—ARWB480DA2 / ARWN480DA2 (460 Volt)

Table 17c: Cooling Capacity ARWB480DA2 / ARWN480DA2

Combination Ratio (%) (Capacity index)	Inlet Water Temperature (°F)	Water Flow Rate (gpm)	Indoor Unit Entering Air Wet Bulb Temperature °F													
			57		61		64		67		70		73		76	
			TC	PI	TC	PI	TC	PI	TC	PI	TC	PI	TC	PI	TC	PI
			MBh	kW	MBh	kW	MBh	kW	MBh	kW	MBh	kW	MBh	kW	MBh	kW
90	50	66.0	335.4	6.7	363.2	7.8	395.6	9.1	430.0	10.3	442.9	10.5	460.1	10.8	473.0	11.0
		127.0	335.4	6.2	363.2	7.3	395.6	8.5	430.0	9.6	442.9	9.8	460.1	10.1	473.0	10.3
		158.5	335.4	6.0	363.2	7.2	395.6	8.3	430.0	9.4	442.9	9.7	460.1	9.9	473.0	10.0
	59	66.0	335.4	9.1	363.2	10.6	395.6	12.4	430.0	13.9	442.9	14.3	460.1	14.6	473.0	14.9
		127.0	335.4	8.4	363.2	9.9	395.6	11.6	430.0	13.0	442.9	13.3	460.1	13.7	473.0	13.9
		58.5	335.4	8.1	363.2	9.7	395.6	11.3	430.0	12.8	442.9	13.1	460.1	13.4	473.0	13.6
	67	66.0	335.4	11.2	363.2	13.1	395.6	15.3	430.0	17.2	442.9	17.6	460.1	18.0	473.0	18.4
		127.0	335.4	10.3	363.2	12.3	395.6	14.3	430.0	16.1	442.9	16.5	460.1	16.9	473.0	17.2
		58.5	335.4	10.0	363.2	12.0	395.6	14.0	430.0	15.8	442.9	16.1	460.1	16.6	473.0	16.7
	75	66.0	335.4	13.7	363.2	16.0	395.6	18.6	430.0	21.0	442.9	21.5	460.1	22.0	473.0	22.4
		127.0	335.4	12.6	363.2	14.9	395.6	17.4	430.0	19.6	442.9	20.1	460.1	20.6	473.0	21.0
		58.5	335.4	12.3	363.2	14.6	395.6	17.0	430.0	19.2	442.9	19.7	460.1	20.2	473.0	20.4
	85	66.0	335.4	16.9	363.2	19.7	395.6	22.9	430.0	25.8	442.9	26.4	460.1	27.0	473.0	27.5
		127.0	335.4	15.5	363.2	18.4	395.6	21.4	430.0	24.1	442.9	24.7	460.1	25.3	473.0	25.8
		58.5	335.4	15.1	363.2	18.0	395.6	21.0	430.0	23.6	442.9	24.2	460.1	24.8	473.0	25.1
	95	66.0	326.1	18.2	353.1	21.2	384.6	24.7	418.1	27.8	430.6	28.5	447.3	29.2	459.9	29.7
		127.0	326.1	16.7	353.1	19.8	384.6	23.1	418.1	26.0	430.6	26.6	447.3	27.3	459.9	27.8
		58.5	326.1	16.3	353.1	19.4	384.6	22.6	418.1	25.5	430.6	26.1	447.3	26.8	459.9	27.1
	104	66.0	316.8	20.9	343.1	24.4	373.6	28.4	406.1	32.0	418.3	32.7	434.6	33.5	446.7	34.1
		127.0	316.8	19.2	343.1	22.8	373.6	26.5	406.1	29.9	418.3	30.6	434.6	31.4	446.7	31.9
		58.5	316.8	18.7	343.1	22.3	373.6	26.0	406.1	29.3	418.3	30.0	434.6	30.8	446.7	31.1
	113	66.0	307.5	23.6	333.1	27.5	362.6	32.0	394.1	36.1	406.0	37.0	421.9	37.9	433.5	38.5
		127.0	307.5	21.7	333.1	25.7	362.6	30.0	394.1	33.7	406.0	34.5	421.9	35.4	433.5	36.1
		158.5	307.5	21.1	333.1	25.2	362.6	29.3	394.1	33.1	406.0	33.9	421.9	34.8	433.5	35.1
80	50	66.0	298.1	5.6	322.9	6.6	351.7	7.6	382.2	8.6	393.7	8.8	409.0	9.0	420.5	9.2
		127.0	298.1	5.2	322.9	6.1	351.7	7.2	382.2	8.1	393.7	8.2	409.0	8.5	420.5	8.6
		158.5	298.1	5.0	322.9	6.0	351.7	7.0	382.2	7.9	393.7	8.1	409.0	8.3	420.5	8.4
	59	66.0	298.1	7.6	322.9	8.9	351.7	10.4	382.2	11.7	393.7	12.0	409.0	12.3	420.5	12.5
		127.0	298.1	7.0	322.9	8.3	351.7	9.7	382.2	10.9	393.7	11.2	409.0	11.5	420.5	11.7
		58.5	298.1	6.8	322.9	8.2	351.7	9.5	382.2	10.7	393.7	11.0	409.0	11.3	420.5	11.4
	67	66.0	298.1	9.4	322.9	11.0	351.7	12.8	382.2	14.4	393.7	14.8	409.0	15.1	420.5	15.4
		127.0	298.1	8.7	322.9	10.3	351.7	12.0	382.2	13.5	393.7	13.8	409.0	14.1	420.5	14.4
		58.5	298.1	8.4	322.9	10.1	351.7	11.7	382.2	13.2	393.7	13.5	409.0	13.9	420.5	14.0
	75	66.0	298.1	11.5	322.9	13.4	351.7	15.6	382.2	17.6	393.7	18.0	409.0	18.4	420.5	18.8
		127.0	298.1	10.6	322.9	12.5	351.7	14.6	382.2	16.4	393.7	16.8	409.0	17.3	420.5	17.6
		58.5	298.1	10.3	322.9	12.3	351.7	14.3	382.2	16.1	393.7	16.5	409.0	16.9	420.5	17.1
	85	66.0	298.1	14.1	322.9	16.5	351.7	19.2	382.2	21.6	393.7	22.1	409.0	22.7	420.5	23.1
		127.0	298.1	13.0	322.9	15.4	351.7	17.9	382.2	20.2	393.7	20.7	409.0	21.2	420.5	21.6
		58.5	298.1	12.6	322.9	15.1	351.7	17.6	382.2	19.8	393.7	20.3	409.0	20.8	420.5	21.0
	95	66.0	298.1	15.7	322.9	18.3	351.7	21.3	382.2	24.0	393.7	24.6	409.0	25.2	420.5	25.6
		127.0	298.1	14.4	322.9	17.1	351.7	19.9	382.2	22.5	393.7	23.0	409.0	23.6	420.5	24.0
		58.5	298.1	14.0	322.9	16.8	351.7	19.5	382.2	22.0	393.7	22.6	409.0	23.1	420.5	23.4
	104	66.0	298.1	18.6	322.9	21.7	351.7	25.3	382.2	28.4	393.7	29.1	409.0	29.8	420.5	30.4
		127.0	298.1	17.1	322.9	20.3	351.7	23.6	382.2	26.6	393.7	27.2	409.0	27.9	420.5	28.4
		58.5	298.1	16.6	322.9	19.8	351.7	23.1	382.2	26.1	393.7	26.7	409.0	27.4	420.5	27.7
	113	66.0	298.1	21.5	322.9	25.1	351.7	29.2	382.2	32.9	393.7	33.6	409.0	34.5	420.5	35.1
		127.0	298.1	19.8	322.9	23.4	351.7	27.3	382.2	30.7	393.7	31.5	409.0	32.3	420.5	32.8
		158.5	298.1	19.2	322.9	22.9	351.7	26.7	382.2	30.1	393.7	30.9	409.0	31.7	420.5	32.0

TC = Total Cooling Capacity (MBh).
PI = Power input (KW).
Power input (KW) includes compressor(s) and controls.
Test condition based on 25 feet of equivalent refrigerant piping and no change in elevation between indoor unit and water source unit.

Due to our policy of continuous product innovation, some specifications may change without notification.
©LG Electronics U.S.A., Inc., Englewood Cliffs, NJ. All rights reserved. "LG" is a registered trademark of LG Corp.

PERFORMANCE DATA

Cooling Capacity—ARWB480DA2 / ARWN480DA2 (460 Volt)

Table 17d: Cooling Capacity ARWB480DA2 / ARWN480DA2

Combination Ratio (%) (Capacity index)	Inlet Water Temperature (°F)	Water Flow Rate (gpm)	Indoor Unit Entering Air Wet Bulb Temperature °F													
			57		61		64		67		70		73		76	
			TC MBh	PI kW	TC MBh	PI kW	TC MBh	PI kW	TC MBh	PI kW	TC MBh	PI kW	TC MBh	PI kW	TC MBh	PI kW
70	50	66.0	260.9	4.7	282.5	5.5	307.7	6.3	334.5	7.2	344.5	7.3	357.9	7.5	367.9	7.6
		127.0	260.9	4.3	282.5	5.1	307.7	5.9	334.5	6.7	344.5	6.9	357.9	7.0	367.9	7.2
		158.5	260.9	4.2	282.5	5.0	307.7	5.8	334.5	6.6	344.5	6.7	357.9	6.9	367.9	7.0
	59	66.0	260.9	6.4	282.5	7.4	307.7	8.6	334.5	9.7	344.5	9.9	357.9	10.2	367.9	10.4
		127.0	260.9	5.8	282.5	6.9	307.7	8.1	334.5	9.1	344.5	9.3	357.9	9.5	367.9	9.7
		158.5	260.9	5.7	282.5	6.8	307.7	7.9	334.5	8.9	344.5	9.1	357.9	9.4	367.9	9.5
	67	66.0	260.9	7.8	282.5	9.1	307.7	10.6	334.5	12.0	344.5	12.3	357.9	12.6	367.9	12.8
		127.0	260.9	7.2	282.5	8.5	307.7	9.9	334.5	11.2	344.5	11.5	357.9	11.8	367.9	12.0
		158.5	260.9	7.0	282.5	8.4	307.7	9.7	334.5	11.0	344.5	11.3	357.9	11.5	367.9	11.7
	75	66.0	260.9	9.6	282.5	11.1	307.7	13.0	334.5	14.6	344.5	15.0	357.9	15.3	367.9	15.6
		127.0	260.9	8.8	282.5	10.4	307.7	12.1	334.5	13.7	344.5	14.0	357.9	14.3	367.9	14.6
		158.5	260.9	8.5	282.5	10.2	307.7	11.9	334.5	13.4	344.5	13.7	357.9	14.1	367.9	14.2
	85	66.0	260.9	11.7	282.5	13.7	307.7	16.0	334.5	18.0	344.5	18.4	357.9	18.9	367.9	19.2
		127.0	260.9	10.8	282.5	12.8	307.7	14.9	334.5	16.8	344.5	17.2	357.9	17.6	367.9	18.0
		158.5	260.9	10.5	282.5	12.5	307.7	14.6	334.5	16.5	344.5	16.9	357.9	17.3	367.9	17.5
	95	66.0	260.9	13.1	282.5	15.2	307.7	17.7	334.5	20.0	344.5	20.4	357.9	20.9	367.9	21.3
		127.0	260.9	12.0	282.5	14.2	307.7	16.6	334.5	18.7	344.5	19.1	357.9	19.6	367.9	20.0
		158.5	260.9	11.7	282.5	13.9	307.7	16.2	334.5	18.3	344.5	18.8	357.9	19.2	367.9	19.4
	104	66.0	260.9	15.5	282.5	18.0	307.7	21.0	334.5	23.6	344.5	24.2	357.9	24.8	367.9	25.2
		127.0	260.9	14.2	282.5	16.9	307.7	19.6	334.5	22.1	344.5	22.6	357.9	23.2	367.9	23.6
		158.5	260.9	13.8	282.5	16.5	307.7	19.2	334.5	21.7	344.5	22.2	357.9	22.8	367.9	23.0
	113	66.0	260.9	17.9	282.5	20.8	307.7	24.3	334.5	27.3	344.5	28.0	357.9	28.7	367.9	29.2
		127.0	260.9	16.4	282.5	19.5	307.7	22.7	334.5	25.5	344.5	26.2	357.9	26.8	367.9	27.3
		158.5	260.9	16.0	282.5	19.1	307.7	22.2	334.5	25.0	344.5	25.7	357.9	26.3	367.9	26.6
60	50	66.0	223.6	3.7	242.2	4.3	263.7	5.1	286.7	5.7	295.3	5.8	306.7	6.0	315.3	6.1
		127.0	223.6	3.4	242.2	4.1	263.7	4.7	286.7	5.3	295.3	5.5	306.7	5.6	315.3	5.7
		158.5	223.6	3.3	242.2	4.0	263.7	4.7	286.7	5.2	295.3	5.4	306.7	5.5	315.3	5.6
	59	66.0	223.6	5.1	242.2	5.9	263.7	6.9	286.7	7.7	295.3	7.9	306.7	8.1	315.3	8.3
		127.0	223.6	4.7	242.2	5.5	263.7	6.4	286.7	7.2	295.3	7.4	306.7	7.6	315.3	7.7
		158.5	223.6	4.5	242.2	5.4	263.7	6.3	286.7	7.1	295.3	7.3	306.7	7.5	315.3	7.5
	67	66.0	223.6	6.2	242.2	7.3	263.7	8.5	286.7	9.6	295.3	9.8	306.7	10.0	315.3	10.2
		127.0	223.6	5.7	242.2	6.8	263.7	7.9	286.7	8.9	295.3	9.1	306.7	9.4	315.3	9.5
		158.5	223.6	5.6	242.2	6.7	263.7	7.8	286.7	8.8	295.3	9.0	306.7	9.2	315.3	9.3
	75	66.0	223.6	7.6	242.2	8.9	263.7	10.3	286.7	11.6	295.3	11.9	306.7	12.2	315.3	12.4
		127.0	223.6	7.0	242.2	8.3	263.7	9.7	286.7	10.9	295.3	11.2	306.7	11.4	315.3	11.6
		158.5	223.6	6.8	242.2	8.1	263.7	9.5	286.7	10.7	295.3	10.9	306.7	11.2	315.3	11.3
	85	66.0	223.6	9.4	242.2	10.9	263.7	12.7	286.7	14.3	295.3	14.7	306.7	15.0	315.3	15.3
		127.0	223.6	8.6	242.2	10.2	263.7	11.9	286.7	13.4	295.3	13.7	306.7	14.1	315.3	14.3
		158.5	223.6	8.4	242.2	10.0	263.7	11.7	286.7	13.1	295.3	13.5	306.7	13.8	315.3	13.9
	95	66.0	223.6	10.4	242.2	12.1	263.7	14.1	286.7	15.9	295.3	16.3	306.7	16.7	315.3	17.0
		127.0	223.6	9.6	242.2	11.3	263.7	13.2	286.7	14.9	295.3	15.2	306.7	15.6	315.3	15.9
		158.5	223.6	9.3	242.2	11.1	263.7	12.9	286.7	14.6	295.3	15.0	306.7	15.3	315.3	15.5
	104	66.0	223.6	12.3	242.2	14.4	263.7	16.7	286.7	18.8	295.3	19.3	306.7	19.8	315.3	20.1
		127.0	223.6	11.3	242.2	13.4	263.7	15.7	286.7	17.6	295.3	18.0	306.7	18.5	315.3	18.8
		158.5	223.6	11.0	242.2	13.2	263.7	15.3	286.7	17.3	295.3	17.7	306.7	18.2	315.3	18.3
	113	66.0	223.6	14.2	242.2	16.6	263.7	19.3	286.7	21.8	295.3	22.3	306.7	22.9	315.3	23.3
		127.0	223.6	13.1	242.2	15.5	263.7	18.1	286.7	20.4	295.3	20.9	306.7	21.4	315.3	21.8
		158.5	223.6	12.7	242.2	15.2	263.7	17.7	286.7	20.0	295.3	20.5	306.7	21.0	315.3	21.2

TC = Total Cooling Capacity (MBh).
PI = Power input (KW).
Power input (KW) includes compressor(s) and controls.
Test condition based on 25 feet of equivalent refrigerant piping and no change in elevation between indoor unit and water source unit.

Due to our policy of continuous product innovation, some specifications may change without notification.
©LG Electronics U.S.A., Inc., Englewood Cliffs, NJ. All rights reserved. "LG" is a registered trademark of LG Corp.

PERFORMANCE DATA

Cooling Capacity—ARWB480DA2 / ARWN480DA2 (460 Volt)

Table 17e: Cooling Capacity ARWB480DA2 / ARWN480DA2

Combination Ratio (%) (Capacity index)	Inlet Water Temperature (°F)	Water Flow Rate (gpm)	Indoor Unit Entering Air Wet Bulb Temperature °F													
			57		61		64		67		70		73		76	
			TC	PI	TC	PI	TC	PI	TC	PI	TC	PI	TC	PI	TC	PI
			MBh	kW	MBh	kW	MBh	kW	MBh	kW	MBh	kW	MBh	kW	MBh	kW
50	50	66.0	186.3	2.8	201.8	3.2	219.8	3.8	238.9	4.3	246.1	4.4	255.6	4.5	262.8	4.5
		127.0	186.3	2.6	201.8	3.0	219.8	3.5	238.9	4.0	246.1	4.1	255.6	4.2	262.8	4.3
		158.5	186.3	2.5	201.8	3.0	219.8	3.5	238.9	3.9	246.1	4.0	255.6	4.1	262.8	4.1
	59	66.0	186.3	3.8	201.8	4.4	219.8	5.1	238.9	5.8	246.1	5.9	255.6	6.1	262.8	6.2
		127.0	186.3	3.5	201.8	4.1	219.8	4.8	238.9	5.4	246.1	5.5	255.6	5.7	262.8	5.8
		158.5	186.3	3.4	201.8	4.0	219.8	4.7	238.9	5.3	246.1	5.4	255.6	5.6	262.8	5.6
	67	66.0	186.3	4.7	201.8	5.4	219.8	6.3	238.9	7.1	246.1	7.3	255.6	7.5	262.8	7.6
		127.0	186.3	4.3	201.8	5.1	219.8	5.9	238.9	6.7	246.1	6.8	255.6	7.0	262.8	7.1
		158.5	186.3	4.2	201.8	5.0	219.8	5.8	238.9	6.5	246.1	6.7	255.6	6.9	262.8	6.9
	75	66.0	186.3	5.7	201.8	6.6	219.8	7.7	238.9	8.7	246.1	8.9	255.6	9.1	262.8	9.3
		127.0	186.3	5.2	201.8	6.2	219.8	7.2	238.9	8.1	246.1	8.3	255.6	8.5	262.8	8.7
		158.5	186.3	5.1	201.8	6.1	219.8	7.1	238.9	8.0	246.1	8.2	255.6	8.4	262.8	8.5
	85	66.0	186.3	7.0	201.8	8.1	219.8	9.5	238.9	10.7	246.1	10.9	255.6	11.2	262.8	11.4
		127.0	186.3	6.4	201.8	7.6	219.8	8.9	238.9	10.0	246.1	10.2	255.6	10.5	262.8	10.7
		158.5	186.3	6.2	201.8	7.5	219.8	8.7	238.9	9.8	246.1	10.0	255.6	10.3	262.8	10.4
	95	66.0	186.3	7.8	201.8	9.1	219.8	10.5	238.9	11.9	246.1	12.2	255.6	12.5	262.8	12.7
		127.0	186.3	7.1	201.8	8.5	219.8	9.9	238.9	11.1	246.1	11.4	255.6	11.7	262.8	11.9
		158.5	186.3	6.9	201.8	8.3	219.8	9.7	238.9	10.9	246.1	11.2	255.6	11.4	262.8	11.6
	104	66.0	186.3	9.2	201.8	10.7	219.8	12.5	238.9	14.1	246.1	14.4	255.6	14.7	262.8	15.0
		127.0	186.3	8.5	201.8	10.0	219.8	11.7	238.9	13.1	246.1	13.5	255.6	13.8	262.8	14.0
		158.5	186.3	8.2	201.8	9.8	219.8	11.4	238.9	12.9	246.1	13.2	255.6	13.5	262.8	13.7
	113	66.0	186.3	10.6	201.8	12.4	219.8	14.4	238.9	16.2	246.1	16.6	255.6	17.0	262.8	17.4
		127.0	186.3	9.8	201.8	11.6	219.8	13.5	238.9	15.2	246.1	15.5	255.6	16.0	262.8	16.2
		158.5	186.3	9.5	201.8	11.3	219.8	13.2	238.9	14.9	246.1	15.3	255.6	15.7	262.8	15.8

TC = Total Cooling Capacity (MBh).
PI = Power input (KW).
Power input (KW) includes compressor(s) and controls.
Test condition based on 25 feet of equivalent refrigerant piping and no change in elevation between indoor unit and water source unit.

Due to our policy of continuous product innovation, some specifications may change without notification.
©LG Electronics U.S.A., Inc., Englewood Cliffs, NJ. All rights reserved. "LG" is a registered trademark of LG Corp.

PERFORMANCE DATA

Cooling Capacity—ARWB580DA2 / ARWN580DA2 (460 Volt)

Table 18a: Cooling Capacity ARWB580DA2 / ARWN580DA2

Combination Ratio (%) (Capacity index)	Inlet Water Temperature (°F)	Water Flow Rate (gpm)	Indoor Unit Entering Air Wet Bulb Temperature °F													
			57		61		64		67		70		73		76	
			TC	PI	TC	PI	TC	PI	TC	PI	TC	PI	TC	PI	TC	PI
			MBh	kW	MBh	kW	MBh	kW	MBh	kW	MBh	kW	MBh	kW	MBh	kW
130	50	79.2	532.9	11.1	577.0	13.0	628.4	15.1	683.2	17.0	703.8	17.4	730.9	17.9	751.4	18.2
		152.4	532.9	10.2	577.0	12.1	628.4	14.1	683.2	15.9	703.8	16.3	730.9	16.7	751.4	17.1
		190.2	532.9	9.9	577.0	11.9	628.4	13.8	683.2	15.6	703.8	16.0	730.9	16.4	751.4	16.7
	59	79.2	524.3	14.6	567.8	17.0	618.4	19.8	672.2	22.3	692.4	22.9	719.2	23.4	739.4	23.9
		152.4	524.3	13.4	567.8	15.9	618.4	18.6	672.2	20.9	692.4	21.4	719.2	22.0	739.4	22.4
		190.2	524.3	13.1	567.8	15.6	618.4	18.2	672.2	20.5	692.4	21.0	719.2	21.6	739.4	21.9
	67	79.2	516.7	17.7	559.6	20.6	609.5	24.1	662.4	27.1	682.3	27.7	708.8	28.4	728.7	28.9
		152.4	516.7	16.3	559.6	19.3	609.5	22.5	662.4	25.3	682.3	26.0	708.8	26.6	728.7	27.2
		190.2	516.7	15.8	559.6	18.9	609.5	22.0	662.4	24.8	682.3	25.5	708.8	26.1	728.7	26.6
	75	79.2	516.7	21.8	559.6	25.5	609.5	29.7	662.4	33.4	682.3	34.2	708.8	35.0	728.7	35.7
		152.4	516.7	20.1	559.6	23.8	609.5	27.7	662.4	31.2	682.3	32.0	708.8	32.9	728.7	33.5
		190.2	516.7	19.5	559.6	23.3	609.5	27.2	662.4	30.6	682.3	31.4	708.8	32.2	728.7	32.8
	85	79.2	516.7	26.2	559.6	30.6	609.5	35.6	662.4	40.1	682.3	41.0	708.8	42.0	728.7	42.8
		152.4	516.7	24.1	559.6	28.6	609.5	33.3	662.4	37.5	682.3	38.4	708.8	39.4	728.7	40.2
		190.2	516.7	23.4	559.6	28.0	609.5	32.6	662.4	36.7	682.3	37.7	708.8	38.7	728.7	39.3
	95	79.2	465.0	26.5	503.6	30.9	548.5	36.0	596.2	40.5	614.1	41.5	637.9	42.5	655.8	43.3
		152.4	465.0	24.4	503.6	28.9	548.5	33.7	596.2	37.9	614.1	38.8	637.9	39.9	655.8	40.7
		190.2	465.0	23.7	503.6	28.3	548.5	33.0	596.2	37.2	614.1	38.1	637.9	39.1	655.8	39.8
	104	79.2	413.4	27.9	447.7	32.6	487.6	38.0	530.0	42.8	545.9	43.8	567.1	44.8	583.0	45.7
		152.4	413.4	25.7	447.7	30.5	487.6	35.5	530.0	40.0	545.9	41.0	567.1	42.1	583.0	42.9
		190.2	413.4	25.0	447.7	29.8	487.6	34.8	530.0	39.2	545.9	40.2	567.1	41.2	583.0	41.9
	113	79.2	361.8	29.4	391.8	34.3	426.7	39.9	463.8	45.0	477.7	46.1	496.3	47.2	510.2	48.0
		152.4	361.8	27.0	391.8	32.1	426.7	37.3	463.8	42.1	477.7	43.1	496.3	44.2	510.2	45.1
		190.2	361.8	26.3	391.8	31.4	426.7	36.6	463.8	41.2	477.7	42.3	496.3	43.4	510.2	44.1
120	50	79.2	504.2	10.5	546.2	12.3	594.9	14.3	646.6	16.1	665.9	16.5	691.8	16.9	711.3	17.2
		152.4	504.2	9.7	546.2	11.5	594.9	13.4	646.6	15.1	665.9	15.4	691.8	15.8	711.3	16.2
		190.2	504.2	9.4	546.2	11.3	594.9	13.1	646.6	14.8	665.9	15.2	691.8	15.5	711.3	15.8
	59	79.2	498.6	14.0	540.0	16.3	588.1	19.0	639.3	21.4	658.4	21.9	684.0	22.4	703.2	22.8
		152.4	498.6	12.8	540.0	15.2	588.1	17.7	639.3	20.0	658.4	20.5	684.0	21.0	703.2	21.4
		190.2	498.6	12.5	540.0	14.9	588.1	17.4	639.3	19.6	658.4	20.1	684.0	20.6	703.2	20.9
	67	79.2	493.6	17.0	534.5	19.9	582.1	23.1	632.8	26.0	651.7	26.7	677.1	27.3	696.0	27.8
		152.4	493.6	15.7	534.5	18.6	582.1	21.6	632.8	24.3	651.7	24.9	677.1	25.6	696.0	26.1
		190.2	493.6	15.2	534.5	18.2	582.1	21.2	632.8	23.9	651.7	24.5	677.1	25.1	696.0	25.5
	75	79.2	493.6	20.9	534.5	24.4	582.1	28.4	632.8	32.0	651.7	32.8	677.1	33.6	696.0	34.2
		152.4	493.6	19.2	534.5	22.8	582.1	26.6	632.8	29.9	651.7	30.7	677.1	31.5	696.0	32.1
		190.2	493.6	18.7	534.5	22.3	582.1	26.0	632.8	29.3	651.7	30.1	677.1	30.9	696.0	31.3
	85	79.2	493.6	25.3	534.5	29.5	582.1	34.4	632.8	38.7	651.7	39.6	677.1	40.6	696.0	41.3
		152.4	493.6	23.3	534.5	27.6	582.1	32.1	632.8	36.2	651.7	37.1	677.1	38.0	696.0	38.8
		190.2	493.6	22.6	534.5	27.0	582.1	31.5	632.8	35.5	651.7	36.4	677.1	37.3	696.0	37.9
	95	79.2	451.7	25.9	489.1	30.2	532.7	35.2	579.0	39.7	596.4	40.6	619.6	41.6	637.0	42.4
		152.4	451.7	23.8	489.1	28.3	532.7	32.9	579.0	37.1	596.4	38.0	619.6	39.0	637.0	39.8
		190.2	451.7	23.2	489.1	27.7	532.7	32.3	579.0	36.4	596.4	37.3	619.6	38.2	637.0	38.8
	104	79.2	409.8	27.9	443.7	32.5	483.3	37.9	525.3	42.7	541.1	43.7	562.1	44.8	577.9	45.6
		152.4	409.8	25.7	443.7	30.4	483.3	35.4	525.3	39.9	541.1	40.9	562.1	42.0	577.9	42.8
		190.2	409.8	25.0	443.7	29.8	483.3	34.7	525.3	39.1	541.1	40.1	562.1	41.2	577.9	41.8
	113	79.2	367.9	29.9	398.3	34.8	433.9	40.6	471.6	45.7	485.8	46.8	504.6	47.9	518.8	48.8
		152.4	367.9	27.5	398.3	32.6	433.9	38.0	471.6	42.7	485.8	43.8	504.6	44.9	518.8	45.8
		190.2	367.9	26.7	398.3	31.9	433.9	37.2	471.6	41.9	485.8	43.0	504.6	44.1	518.8	44.7

TC = Total Cooling Capacity (MBh).
PI = Power input (KW).
Power input (KW) includes compressor(s) and controls.
Test condition based on 25 feet of equivalent refrigerant piping and no change in elevation between indoor unit and water source unit.

Due to our policy of continuous product innovation, some specifications may change without notification.
©LG Electronics U.S.A., Inc., Englewood Cliffs, NJ. All rights reserved. "LG" is a registered trademark of LG Corp.

PERFORMANCE DATA

Cooling Capacity—ARWB580DA2 / ARWN580DA2 (460 Volt)

Table 18b: Cooling Capacity ARWB580DA2 / ARWN580DA2

Combination Ratio (%) (Capacity index)	Inlet Water Temperature (°F)	Water Flow Rate (gpm)	Indoor Unit Entering Air Wet Bulb Temperature °F													
			57		61		64		67		70		73		76	
			TC	PI	TC	PI	TC	PI	TC	PI	TC	PI	TC	PI	TC	PI
			MBh	kW	MBh	kW	MBh	kW	MBh	kW	MBh	kW	MBh	kW	MBh	kW
110	50	79.2	475.7	9.9	515.4	11.6	561.2	13.5	609.9	15.2	628.2	15.6	652.7	16.0	671.1	16.2
		152.4	475.7	9.1	515.4	10.9	561.2	12.6	609.9	14.2	628.2	14.6	652.7	15.0	671.1	15.2
		190.2	475.7	8.9	515.4	10.6	561.2	12.4	609.9	14.0	628.2	14.3	652.7	14.7	671.1	14.9
	59	79.2	472.9	13.3	512.2	15.6	557.8	18.1	606.3	20.4	624.5	20.9	648.8	21.4	667.0	21.8
		152.4	472.9	12.3	512.2	14.5	557.8	16.9	606.3	19.1	624.5	19.5	648.8	20.0	667.0	20.4
		190.2	472.9	11.9	512.2	14.2	557.8	16.6	606.3	18.7	624.5	19.2	648.8	19.7	667.0	19.9
	67	79.2	470.4	16.3	509.4	19.1	554.8	22.2	603.1	25.0	621.2	25.6	645.3	26.2	663.4	26.7
		152.4	470.4	15.0	509.4	17.8	554.8	20.8	603.1	23.4	621.2	23.9	645.3	24.6	663.4	25.0
		190.2	470.4	14.6	509.4	17.4	554.8	20.3	603.1	22.9	621.2	23.5	645.3	24.1	663.4	24.4
	75	79.2	470.4	20.0	509.4	23.3	554.8	27.2	603.1	30.6	621.2	31.3	645.3	32.1	663.4	32.7
		152.4	470.4	18.4	509.4	21.8	554.8	25.4	603.1	28.6	621.2	29.3	645.3	30.1	663.4	30.6
		190.2	470.4	17.9	509.4	21.4	554.8	24.9	603.1	28.1	621.2	28.8	645.3	29.5	663.4	29.9
	85	79.2	470.4	24.4	509.4	28.5	554.8	33.1	603.1	37.3	621.2	38.2	645.3	39.1	663.4	39.9
		152.4	470.4	22.4	509.4	26.6	554.8	31.0	603.1	34.9	621.2	35.7	645.3	36.7	663.4	37.4
		190.2	470.4	21.8	509.4	26.0	554.8	30.4	603.1	34.2	621.2	35.1	645.3	36.0	663.4	36.4
	95	79.2	438.3	25.4	474.6	29.6	516.9	34.5	561.9	38.8	578.7	39.7	601.2	40.7	618.1	41.4
		152.4	438.3	23.3	474.6	27.7	516.9	32.2	561.9	36.3	578.7	37.2	601.2	38.1	618.1	38.8
		190.2	438.3	22.7	474.6	27.1	516.9	31.6	561.9	35.6	578.7	36.5	601.2	37.4	618.1	37.9
	104	79.2	406.1	27.9	439.8	32.5	479.0	37.9	520.7	42.6	536.3	43.6	557.1	44.7	572.8	45.5
		152.4	406.1	25.6	439.8	30.4	479.0	35.4	520.7	39.9	536.3	40.8	557.1	41.9	572.8	42.7
		190.2	406.1	24.9	439.8	29.7	479.0	34.7	520.7	39.1	536.3	40.1	557.1	41.1	572.8	41.6
	113	79.2	373.9	30.3	405.0	35.4	441.1	41.3	479.5	46.4	493.9	47.6	513.0	48.7	527.5	49.6
		152.4	373.9	27.9	405.0	33.1	441.1	38.6	479.5	43.4	493.9	44.5	513.0	45.6	527.5	46.5
		190.2	373.9	27.1	405.0	32.4	441.1	37.8	479.5	42.6	493.9	43.6	513.0	44.8	527.5	45.3
100	50	79.2	447.3	9.4	484.4	10.9	527.5	12.7	573.4	14.3	590.6	14.7	613.5	15.0	630.7	15.3
		152.4	447.3	8.6	484.4	10.2	527.5	11.9	573.4	13.4	590.6	13.7	613.5	14.1	630.7	14.3
		190.2	447.3	8.4	484.4	10.0	527.5	11.7	573.4	13.1	590.6	13.5	613.5	13.8	630.7	13.9
	59	79.2	447.3	12.7	484.4	14.8	527.5	17.3	573.4	19.4	590.6	19.9	613.5	20.4	630.7	20.7
		152.4	447.3	11.7	484.4	13.9	527.5	16.1	573.4	18.2	590.6	18.6	613.5	19.1	630.7	19.4
		190.2	447.3	11.4	484.4	13.6	527.5	15.8	573.4	17.8	590.6	18.3	613.5	18.7	630.7	18.9
	67	79.2	447.3	15.7	484.4	18.3	527.5	21.3	573.4	24.0	590.6	24.5	613.5	25.1	630.7	25.6
		152.4	447.3	14.4	484.4	17.1	527.5	19.9	573.4	22.4	590.6	22.9	613.5	23.5	630.7	24.0
		190.2	447.3	14.0	484.4	16.7	527.5	19.5	573.4	22.0	590.6	22.5	613.5	23.1	630.7	23.3
	75	79.2	447.3	19.1	484.4	22.3	527.5	25.9	573.4	29.2	590.6	29.9	613.5	30.7	630.7	31.2
		152.4	447.3	17.6	484.4	20.8	527.5	24.3	573.4	27.3	590.6	28.0	613.5	28.7	630.7	29.2
		190.2	447.3	17.1	484.4	20.4	527.5	23.8	573.4	26.8	590.6	27.5	613.5	28.2	630.7	28.4
	85	79.2	447.3	23.5	484.4	27.4	527.5	31.9	573.4	35.9	590.6	36.8	613.5	37.7	630.7	38.4
		152.4	447.3	21.6	484.4	25.6	527.5	29.8	573.4	33.6	590.6	34.4	613.5	35.3	630.7	35.9
		190.2	447.3	21.0	484.4	25.1	527.5	29.2	573.4	32.9	590.6	33.8	613.5	34.6	630.7	35.0
	95	79.2	424.9	24.8	460.1	28.9	501.2	33.7	544.7	37.9	561.1	38.8	582.9	39.8	599.2	40.5
		152.4	424.9	22.8	460.1	27.0	501.2	31.5	544.7	35.5	561.1	36.3	582.9	37.2	599.2	37.9
		190.2	424.9	22.2	460.1	26.5	501.2	30.9	544.7	34.8	561.1	35.6	582.9	36.6	599.2	36.9
	104	79.2	402.5	27.8	435.9	32.4	474.8	37.8	516.1	42.6	531.5	43.6	552.2	44.6	567.7	45.5
		152.4	402.5	25.6	435.9	30.3	474.8	35.3	516.1	39.8	531.5	40.7	552.2	41.8	567.7	42.5
		190.2	402.5	24.9	435.9	29.7	474.8	34.6	516.1	39.0	531.5	40.0	552.2	41.0	567.7	41.4
	113	79.2	380.1	30.8	411.7	36.0	448.4	41.9	487.5	47.2	501.9	48.3	521.5	49.5	536.2	50.4
		152.4	380.1	28.4	411.7	33.6	448.4	39.2	487.5	44.1	501.9	45.2	521.5	46.3	536.2	47.2
		190.2	380.1	27.6	411.7	32.9	448.4	38.4	487.5	43.3	501.9	44.3	521.5	45.5	536.2	45.9

TC = Total Cooling Capacity (MBh).
PI = Power input (KW).
Power input (KW) includes compressor(s) and controls.
Test condition based on 25 feet of equivalent refrigerant piping and no change in elevation between indoor unit and water source unit.

Due to our policy of continuous product innovation, some specifications may change without notification.
©LG Electronics U.S.A., Inc., Englewood Cliffs, NJ. All rights reserved. "LG" is a registered trademark of LG Corp.

PERFORMANCE DATA

Cooling Capacity—ARWB580DA2 / ARWN580DA2 (460 Volt)

Table 18c: Cooling Capacity ARWB580DA2 / ARWN580DA2

Combination Ratio (%) (Capacity index)	Inlet Water Temperature (°F)	Water Flow Rate (gpm)	Indoor Unit Entering Air Wet Bulb Temperature °F													
			57		61		64		67		70		73		76	
			TC	PI	TC	PI	TC	PI	TC	PI	TC	PI	TC	PI	TC	PI
			MBh	kW	MBh	kW	MBh	kW	MBh	kW	MBh	kW	MBh	kW	MBh	kW
90	50	79.2	402.5	8.1	435.9	9.4	474.8	11.0	516.1	12.3	531.5	12.6	552.2	12.9	567.7	13.2
		152.4	402.5	7.4	435.9	8.8	474.8	10.2	516.1	11.5	531.5	11.8	552.2	12.1	567.7	12.3
		190.2	402.5	7.2	435.9	8.6	474.8	10.0	516.1	11.3	531.5	11.6	552.2	11.9	567.7	12.0
	59	79.2	402.5	10.9	435.9	12.8	474.8	14.9	516.1	16.7	531.5	17.1	552.2	17.5	567.7	17.9
		152.4	402.5	10.1	435.9	11.9	474.8	13.9	516.1	15.6	531.5	16.0	552.2	16.4	567.7	16.7
		190.2	402.5	9.8	435.9	11.7	474.8	13.6	516.1	15.3	531.5	15.7	552.2	16.1	567.7	16.3
	67	79.2	402.5	13.5	435.9	15.7	474.8	18.3	516.1	20.6	531.5	21.1	552.2	21.6	567.7	22.0
		152.4	402.5	12.4	435.9	14.7	474.8	17.1	516.1	19.3	531.5	19.7	552.2	20.3	567.7	20.6
		190.2	402.5	12.1	435.9	14.4	474.8	16.8	516.1	18.9	531.5	19.4	552.2	19.9	567.7	20.1
	75	79.2	402.5	16.4	435.9	19.2	474.8	22.3	516.1	25.2	531.5	25.8	552.2	26.4	567.7	26.9
		152.4	402.5	15.1	435.9	17.9	474.8	20.9	516.1	23.5	531.5	24.1	552.2	24.7	567.7	25.1
		190.2	402.5	14.7	435.9	17.5	474.8	20.5	516.1	23.1	531.5	23.6	552.2	24.2	567.7	24.5
	85	79.2	402.5	20.2	435.9	23.6	474.8	27.5	516.1	30.9	531.5	31.7	552.2	32.5	567.7	33.0
		152.4	402.5	18.6	435.9	22.1	474.8	25.7	516.1	28.9	531.5	29.6	552.2	30.4	567.7	30.9
		190.2	402.5	18.1	435.9	21.6	474.8	25.2	516.1	28.4	531.5	29.1	552.2	29.8	567.7	30.1
	95	79.2	391.3	21.8	423.8	25.4	461.6	29.6	501.7	33.4	516.8	34.2	536.8	35.0	551.9	35.6
		152.4	391.3	20.1	423.8	23.8	461.6	27.7	501.7	31.2	516.8	32.0	536.8	32.8	551.9	33.4
		190.2	391.3	19.5	423.8	23.3	461.6	27.1	501.7	30.6	516.8	31.4	536.8	32.2	551.9	32.5
	104	79.2	380.2	25.1	411.7	29.2	448.4	34.0	487.4	38.3	502.0	39.3	521.5	40.2	536.1	40.9
		152.4	380.2	23.0	411.7	27.3	448.4	31.8	487.4	35.9	502.0	36.7	521.5	37.6	536.1	38.3
		190.2	380.2	22.4	411.7	26.7	448.4	31.2	487.4	35.1	502.0	36.0	521.5	36.9	536.1	37.3
	113	79.2	369.1	28.3	399.6	33.0	435.2	38.4	473.1	43.3	487.2	44.3	506.2	45.4	520.3	46.2
		152.4	369.1	26.0	399.6	30.9	435.2	36.0	473.1	40.5	487.2	41.5	506.2	42.5	520.3	43.3
		190.2	369.1	25.3	399.6	30.2	435.2	35.2	473.1	39.7	487.2	40.7	506.2	41.7	520.3	42.1
80	50	79.2	357.8	6.8	387.5	7.9	422.0	9.2	458.7	10.3	472.5	10.6	490.8	10.8	504.6	11.0
		152.4	357.8	6.2	387.5	7.4	422.0	8.6	458.7	9.7	472.5	9.9	490.8	10.1	504.6	10.3
		190.2	357.8	6.0	387.5	7.2	422.0	8.4	458.7	9.5	472.5	9.7	490.8	9.9	504.6	10.1
	59	79.2	357.8	9.2	387.5	10.7	422.0	12.5	458.7	14.0	472.5	14.4	490.8	14.7	504.6	15.0
		152.4	357.8	8.4	387.5	10.0	422.0	11.6	458.7	13.1	472.5	13.4	490.8	13.8	504.6	14.0
		190.2	357.8	8.2	387.5	9.8	422.0	11.4	458.7	12.9	472.5	13.2	490.8	13.5	504.6	13.6
	67	79.2	357.8	11.3	387.5	13.2	422.0	15.4	458.7	17.3	472.5	17.7	490.8	18.1	504.6	18.5
		152.4	357.8	10.4	387.5	12.3	422.0	14.4	458.7	16.2	472.5	16.6	490.8	17.0	504.6	17.3
		190.2	357.8	10.1	387.5	12.1	422.0	14.1	458.7	15.9	472.5	16.2	490.8	16.7	504.6	16.8
	75	79.2	357.8	13.8	387.5	16.1	422.0	18.7	458.7	21.1	472.5	21.6	490.8	22.1	504.6	22.5
		152.4	357.8	12.7	387.5	15.0	422.0	17.5	458.7	19.7	472.5	20.2	490.8	20.7	504.6	21.1
		190.2	357.8	12.3	387.5	14.7	422.0	17.1	458.7	19.3	472.5	19.8	490.8	20.3	504.6	20.5
	85	79.2	357.8	17.0	387.5	19.8	422.0	23.0	458.7	25.9	472.5	26.6	490.8	27.2	504.6	27.7
		152.4	357.8	15.6	387.5	18.5	422.0	21.5	458.7	24.2	472.5	24.8	490.8	25.5	504.6	25.9
		190.2	357.8	15.2	387.5	18.1	422.0	21.1	458.7	23.8	472.5	24.4	490.8	25.0	504.6	25.2
	95	79.2	357.8	18.8	387.5	22.0	422.0	25.6	458.7	28.8	472.5	29.5	490.8	30.2	504.6	30.8
		152.4	357.8	17.3	387.5	20.5	422.0	23.9	458.7	26.9	472.5	27.6	490.8	28.3	504.6	28.8
		190.2	357.8	16.8	387.5	20.1	422.0	23.4	458.7	26.4	472.5	27.1	490.8	27.8	504.6	28.0
	104	79.2	357.8	22.3	387.5	26.0	422.0	30.3	458.7	34.1	472.5	34.9	490.8	35.8	504.6	36.4
		152.4	357.8	20.5	387.5	24.3	422.0	28.3	458.7	31.9	472.5	32.7	490.8	33.5	504.6	34.1
		190.2	357.8	19.9	387.5	23.8	422.0	27.8	458.7	31.3	472.5	32.1	490.8	32.9	504.6	33.2
	113	79.2	357.8	25.8	387.5	30.1	422.0	35.0	458.7	39.4	472.5	40.4	490.8	41.4	504.6	42.1
		152.4	357.8	23.7	387.5	28.1	422.0	32.7	458.7	36.9	472.5	37.7	490.8	38.7	504.6	39.4
		190.2	357.8	23.0	387.5	27.5	422.0	32.1	458.7	36.2	472.5	37.0	490.8	38.0	504.6	38.4

TC = Total Cooling Capacity (MBh).
PI = Power input (KW).
Power input (KW) includes compressor(s) and controls.
Test condition based on 25 feet of equivalent refrigerant piping and no change in elevation between indoor unit and water source unit.

Due to our policy of continuous product innovation, some specifications may change without notification.
©LG Electronics U.S.A., Inc., Englewood Cliffs, NJ. All rights reserved. "LG" is a registered trademark of LG Corp.

PERFORMANCE DATA

Cooling Capacity—ARWB580DA2 / ARWN580DA2 (460 Volt)

Table 18d: Cooling Capacity ARWB580DA2 / ARWN580DA2

Combination Ratio (%) (Capacity index)	Inlet Water Temperature (°F)	Water Flow Rate (gpm)	Indoor Unit Entering Air Wet Bulb Temperature °F													
			57		61		64		67		70		73		76	
			TC MBh	PI kW	TC MBh	PI kW	TC MBh	PI kW	TC MBh	PI kW	TC MBh	PI kW	TC MBh	PI kW	TC MBh	PI kW
70	50	79.2	313.1	5.6	339.0	6.5	369.3	7.6	401.4	8.6	413.4	8.8	429.5	9.0	441.5	9.2
		152.4	313.1	5.2	339.0	6.1	369.3	7.1	401.4	8.0	413.4	8.2	429.5	8.4	441.5	8.6
		190.2	313.1	5.0	339.0	6.0	369.3	7.0	401.4	7.9	413.4	8.1	429.5	8.3	441.5	8.4
	59	79.2	313.1	7.6	339.0	8.9	369.3	10.4	401.4	11.7	413.4	11.9	429.5	12.2	441.5	12.5
		152.4	313.1	7.0	339.0	8.3	369.3	9.7	401.4	10.9	413.4	11.2	429.5	11.4	441.5	11.7
		190.2	313.1	6.8	339.0	8.1	369.3	9.5	401.4	10.7	413.4	11.0	429.5	11.2	441.5	11.3
	67	79.2	313.1	9.4	339.0	11.0	369.3	12.8	401.4	14.4	413.4	14.7	429.5	15.1	441.5	15.4
		152.4	313.1	8.6	339.0	10.2	369.3	11.9	401.4	13.4	413.4	13.8	429.5	14.1	441.5	14.4
		190.2	313.1	8.4	339.0	10.0	369.3	11.7	401.4	13.2	413.4	13.5	429.5	13.9	441.5	14.0
	75	79.2	313.1	11.5	339.0	13.4	369.3	15.6	401.4	17.5	413.4	18.0	429.5	18.4	441.5	18.7
		152.4	313.1	10.5	339.0	12.5	369.3	14.6	401.4	16.4	413.4	16.8	429.5	17.2	441.5	17.5
		190.2	313.1	10.2	339.0	12.2	369.3	14.3	401.4	16.1	413.4	16.5	429.5	16.9	441.5	17.1
	85	79.2	313.1	14.1	339.0	16.4	369.3	19.1	401.4	21.6	413.4	22.1	429.5	22.6	441.5	23.0
		152.4	313.1	13.0	339.0	15.4	369.3	17.9	401.4	20.2	413.4	20.6	429.5	21.2	441.5	21.6
		190.2	313.1	12.6	339.0	15.0	369.3	17.5	401.4	19.8	413.4	20.3	429.5	20.8	441.5	21.0
	95	79.2	313.1	15.7	339.0	18.3	369.3	21.3	401.4	24.0	413.4	24.5	429.5	25.1	441.5	25.6
		152.4	313.1	14.4	339.0	17.1	369.3	19.9	401.4	22.4	413.4	22.9	429.5	23.5	441.5	23.9
		190.2	313.1	14.0	339.0	16.7	369.3	19.5	401.4	22.0	413.4	22.5	429.5	23.1	441.5	23.3
	104	79.2	313.1	18.5	339.0	21.6	369.3	25.2	401.4	28.4	413.4	29.0	429.5	29.8	441.5	30.3
		152.4	313.1	17.1	339.0	20.2	369.3	23.6	401.4	26.5	413.4	27.2	429.5	27.9	441.5	28.4
		190.2	313.1	16.6	339.0	19.8	369.3	23.1	401.4	26.0	413.4	26.7	429.5	27.3	441.5	27.6
	113	79.2	313.1	21.4	339.0	25.0	369.3	29.1	401.4	32.8	413.4	33.6	429.5	34.4	441.5	35.0
		152.4	313.1	19.7	339.0	23.4	369.3	27.2	401.4	30.6	413.4	31.4	429.5	32.2	441.5	32.8
		190.2	313.1	19.2	339.0	22.9	369.3	26.7	401.4	30.0	413.4	30.8	429.5	31.6	441.5	31.9
60	50	79.2	268.4	4.5	290.6	5.2	316.5	6.1	344.0	6.8	354.4	7.0	368.1	7.2	378.4	7.3
		152.4	268.4	4.1	290.6	4.9	316.5	5.7	344.0	6.4	354.4	6.6	368.1	6.7	378.4	6.9
		190.2	268.4	4.0	290.6	4.8	316.5	5.6	344.0	6.3	354.4	6.4	368.1	6.6	378.4	6.7
	59	79.2	268.4	6.1	290.6	7.1	316.5	8.3	344.0	9.3	354.4	9.5	368.1	9.8	378.4	9.9
		152.4	268.4	5.6	290.6	6.6	316.5	7.7	344.0	8.7	354.4	8.9	368.1	9.1	378.4	9.3
		190.2	268.4	5.4	290.6	6.5	316.5	7.6	344.0	8.5	354.4	8.7	368.1	9.0	378.4	9.0
	67	79.2	268.4	7.5	290.6	8.7	316.5	10.2	344.0	11.5	354.4	11.7	368.1	12.0	378.4	12.2
		152.4	268.4	6.9	290.6	8.2	316.5	9.5	344.0	10.7	354.4	11.0	368.1	11.3	378.4	11.5
		190.2	268.4	6.7	290.6	8.0	316.5	9.3	344.0	10.5	354.4	10.8	368.1	11.0	378.4	11.2
	75	79.2	268.4	9.1	290.6	10.7	316.5	12.4	344.0	14.0	354.4	14.3	368.1	14.7	378.4	14.9
		152.4	268.4	8.4	290.6	10.0	316.5	11.6	344.0	13.1	354.4	13.4	368.1	13.7	378.4	14.0
		190.2	268.4	8.2	290.6	9.8	316.5	11.4	344.0	12.8	354.4	13.1	368.1	13.5	378.4	13.6
	85	79.2	268.4	11.2	290.6	13.1	316.5	15.3	344.0	17.2	354.4	17.6	368.1	18.0	378.4	18.4
		152.4	268.4	10.3	290.6	12.3	316.5	14.3	344.0	16.1	354.4	16.5	368.1	16.9	378.4	17.2
		190.2	268.4	10.1	290.6	12.0	316.5	14.0	344.0	15.8	354.4	16.2	368.1	16.6	378.4	16.7
	95	79.2	268.4	12.5	290.6	14.6	316.5	17.0	344.0	19.1	354.4	19.6	368.1	20.0	378.4	20.4
		152.4	268.4	11.5	290.6	13.6	316.5	15.9	344.0	17.9	354.4	18.3	368.1	18.8	378.4	19.1
		190.2	268.4	11.2	290.6	13.3	316.5	15.5	344.0	17.5	354.4	17.9	368.1	18.4	378.4	18.6
	104	79.2	268.4	14.8	290.6	17.2	316.5	20.1	344.0	22.6	354.4	23.2	368.1	23.7	378.4	24.2
		152.4	268.4	13.6	290.6	16.1	316.5	18.8	344.0	21.1	354.4	21.7	368.1	22.2	378.4	22.6
		190.2	268.4	13.2	290.6	15.8	316.5	18.4	344.0	20.7	354.4	21.2	368.1	21.8	378.4	22.0
	113	79.2	268.4	17.1	290.6	19.9	316.5	23.2	344.0	26.1	354.4	26.8	368.1	27.4	378.4	27.9
		152.4	268.4	15.7	290.6	18.6	316.5	21.7	344.0	24.4	354.4	25.0	368.1	25.7	378.4	26.1
		190.2	268.4	15.3	290.6	18.2	316.5	21.3	344.0	24.0	354.4	24.5	368.1	25.2	378.4	25.4

TC = Total Cooling Capacity (MBh).
PI = Power input (KW).
Power input (KW) includes compressor(s) and controls.
Test condition based on 25 feet of equivalent refrigerant piping and no change in elevation between indoor unit and water source unit.

Due to our policy of continuous product innovation, some specifications may change without notification.
©LG Electronics U.S.A., Inc., Englewood Cliffs, NJ. All rights reserved. "LG" is a registered trademark of LG Corp.

PERFORMANCE DATA

Cooling Capacity—ARWB580DA2 / ARWN580DA2 (460 Volt)

Table 18e: Cooling Capacity ARWB580DA2 / ARWN580DA2

Combination Ratio (%) (Capacity index)	Inlet Water Temperature (°F)	Water Flow Rate (gpm)	Indoor Unit Entering Air Wet Bulb Temperature °F													
			57		61		64		67		70		73		76	
			TC	PI	TC	PI	TC	PI	TC	PI	TC	PI	TC	PI	TC	PI
			MBh	kW	MBh	kW	MBh	kW	MBh	kW	MBh	kW	MBh	kW	MBh	kW
50	50	79.2	223.6	3.3	242.2	3.9	263.8	4.5	286.7	5.1	295.3	5.2	306.8	5.4	315.4	5.5
		152.4	223.6	3.1	242.2	3.6	263.8	4.2	286.7	4.8	295.3	4.9	306.8	5.0	315.4	5.1
		190.2	223.6	3.0	242.2	3.6	263.8	4.1	286.7	4.7	295.3	4.8	306.8	4.9	315.4	5.0
	59	79.2	223.6	4.5	242.2	5.3	263.8	6.2	286.7	6.9	295.3	7.1	306.8	7.3	315.4	7.4
		152.4	223.6	4.2	242.2	4.9	263.8	5.8	286.7	6.5	295.3	6.6	306.8	6.8	315.4	6.9
		190.2	223.6	4.1	242.2	4.8	263.8	5.6	286.7	6.4	295.3	6.5	306.8	6.7	315.4	6.7
	67	79.2	223.6	5.6	242.2	6.5	263.8	7.6	286.7	8.5	295.3	8.8	306.8	9.0	315.4	9.1
		152.4	223.6	5.1	242.2	6.1	263.8	7.1	286.7	8.0	295.3	8.2	306.8	8.4	315.4	8.5
		190.2	223.6	5.0	242.2	6.0	263.8	7.0	286.7	7.8	295.3	8.0	306.8	8.2	315.4	8.3
	75	79.2	223.6	6.8	242.2	7.9	263.8	9.3	286.7	10.4	295.3	10.7	306.8	10.9	315.4	11.1
		152.4	223.6	6.3	242.2	7.4	263.8	8.7	286.7	9.7	295.3	10.0	306.8	10.2	315.4	10.4
		190.2	223.6	6.1	242.2	7.3	263.8	8.5	286.7	9.6	295.3	9.8	306.8	10.0	315.4	10.1
	85	79.2	223.6	8.4	242.2	9.8	263.8	11.4	286.7	12.8	295.3	13.1	306.8	13.4	315.4	13.7
		152.4	223.6	7.7	242.2	9.1	263.8	10.6	286.7	12.0	295.3	12.3	306.8	12.6	315.4	12.8
		190.2	223.6	7.5	242.2	8.9	263.8	10.4	286.7	11.8	295.3	12.0	306.8	12.4	315.4	12.5
	95	79.2	223.6	9.3	242.2	10.9	263.8	12.6	286.7	14.2	295.3	14.6	306.8	14.9	315.4	15.2
		152.4	223.6	8.6	242.2	10.2	263.8	11.8	286.7	13.3	295.3	13.6	306.8	14.0	315.4	14.2
		190.2	223.6	8.3	242.2	9.9	263.8	11.6	286.7	13.1	295.3	13.4	306.8	13.7	315.4	13.9
	104	79.2	223.6	11.0	242.2	12.9	263.8	15.0	286.7	16.9	295.3	17.3	306.8	17.7	315.4	18.0
		152.4	223.6	10.1	242.2	12.0	263.8	14.0	286.7	15.8	295.3	16.1	306.8	16.6	315.4	16.9
		190.2	223.6	9.9	242.2	11.8	263.8	13.7	286.7	15.5	295.3	15.8	306.8	16.3	315.4	16.4
	113	79.2	223.6	12.7	242.2	14.9	263.8	17.3	286.7	19.5	295.3	19.9	306.8	20.4	315.4	20.8
		152.4	223.6	11.7	242.2	13.9	263.8	16.2	286.7	18.2	295.3	18.7	306.8	19.1	315.4	19.5
		190.2	223.6	11.4	242.2	13.6	263.8	15.8	286.7	17.9	295.3	18.3	306.8	18.8	315.4	19.0

TC = Total Cooling Capacity (MBh).
PI = Power input (KW).
Power input (KW) includes compressor(s) and controls.
Test condition based on 25 feet of equivalent refrigerant piping and no change in elevation between indoor unit and water source unit.

Due to our policy of continuous product innovation, some specifications may change without notification.
©LG Electronics U.S.A., Inc., Englewood Cliffs, NJ. All rights reserved. "LG" is a registered trademark of LG Corp.

PERFORMANCE DATA

Cooling Capacity—ARWB072BA2 / ARWN072BA2 (208/230 Volt)

Table 19a: Cooling Capacity ARWB072BA2 / ARWN072BA2

Combination Ratio (%) (Capacity index)	Inlet Water Temperature (°F)	Water Flow Rate (gpm)	Indoor Unit Entering Air Wet Bulb Temperature °F													
			57		61		64		67		70		73		76	
			TC MBh	PI kW	TC MBh	PI kW	TC MBh	PI kW	TC MBh	PI kW	TC MBh	PI kW	TC MBh	PI kW	TC MBh	PI kW
130	50	7.9	66.8	1.48	72.4	1.73	79.1	2.01	85.8	2.27	88.3	2.33	91.8	2.38	94.3	2.40
		10.6	66.8	1.45	72.4	1.70	79.1	1.98	85.8	2.23	88.3	2.29	91.8	2.34	94.3	2.37
		21.1	66.8	1.34	72.4	1.60	79.1	1.86	85.8	2.09	88.3	2.13	91.8	2.19	94.3	2.24
		26.4	66.8	1.31	72.4	1.56	79.1	1.82	85.8	2.04	88.3	2.10	91.8	2.15	94.3	2.18
	59	7.9	65.8	1.95	71.3	2.27	77.7	2.64	84.4	2.98	86.9	3.05	90.3	3.12	92.8	3.17
		10.6	65.8	1.91	71.3	2.23	77.7	2.60	84.4	2.93	86.9	3.00	90.3	3.07	92.8	3.12
		21.1	65.8	1.76	71.3	2.09	77.7	2.43	84.4	2.74	86.9	2.80	90.3	2.88	92.8	2.94
		26.4	65.8	1.71	71.3	2.04	77.7	2.38	84.4	2.68	86.9	2.75	90.3	2.82	92.8	2.87
	67	7.9	64.9	2.37	70.3	2.74	76.5	3.20	83.2	3.61	85.7	3.69	89.0	3.78	91.5	3.85
		10.6	64.9	2.32	70.3	2.70	76.5	3.15	83.2	3.55	85.7	3.63	89.0	3.72	91.5	3.79
		21.1	64.9	2.13	70.3	2.53	76.5	2.94	83.2	3.32	85.7	3.40	89.0	3.49	91.5	3.56
		26.4	64.9	2.07	70.3	2.47	76.5	2.88	83.2	3.25	85.7	3.33	89.0	3.42	91.5	3.48
	75	7.9	64.9	2.92	70.3	3.38	76.5	3.94	83.2	4.44	85.7	4.55	89.0	4.66	91.5	4.74
		10.6	64.9	2.86	70.3	3.33	76.5	3.88	83.2	4.37	85.7	4.48	89.0	4.59	91.5	4.67
		21.1	64.9	2.63	70.3	3.12	76.5	3.63	83.2	4.09	85.7	4.19	89.0	4.30	91.5	4.39
		26.4	64.9	2.56	70.3	3.05	76.5	3.56	83.2	4.01	85.7	4.11	89.0	4.22	91.5	4.29
	85	7.9	64.9	3.50	70.3	4.07	76.5	4.74	83.2	5.34	85.7	5.46	89.0	5.60	91.5	5.68
		10.6	64.9	3.43	70.3	4.00	76.5	4.66	83.2	5.25	85.7	5.37	89.0	5.51	91.5	5.60
		21.1	64.9	3.15	70.3	3.74	76.5	4.36	83.2	4.91	85.7	5.03	89.0	5.16	91.5	5.27
		26.4	64.9	3.07	70.3	3.66	76.5	4.27	83.2	4.81	85.7	4.94	89.0	5.06	91.5	5.15
	95	7.9	58.4	3.54	63.2	4.12	68.9	4.79	74.9	5.40	77.1	5.52	80.1	5.66	82.3	5.76
		10.6	58.4	3.47	63.2	4.05	68.9	4.71	74.9	5.31	77.1	5.43	80.1	5.57	82.3	5.67
		21.1	58.4	3.19	63.2	3.78	68.9	4.41	74.9	4.96	77.1	5.09	80.1	5.22	82.3	5.32
		26.4	58.4	3.10	63.2	3.70	68.9	4.32	74.9	4.86	77.1	4.99	80.1	5.12	82.3	5.21
	104	7.9	51.9	3.74	56.2	4.34	61.2	5.05	66.5	5.69	68.5	5.82	71.2	5.96	73.2	6.07
		10.6	51.9	3.66	56.2	4.27	61.2	4.97	66.5	5.60	68.5	5.73	71.2	5.87	73.2	5.98
		21.1	51.9	3.36	56.2	3.99	61.2	4.65	66.5	5.23	68.5	5.36	71.2	5.51	73.2	5.62
		26.4	51.9	3.27	56.2	3.90	61.2	4.55	66.5	5.13	68.5	5.26	71.2	5.40	73.2	5.49
	113	7.9	45.4	3.93	49.2	4.56	53.5	5.32	58.1	5.99	59.9	6.13	62.3	6.26	64.1	6.38
		10.6	45.4	3.85	49.2	4.49	53.5	5.23	58.1	5.89	59.9	6.03	62.3	6.17	64.1	6.29
		21.1	45.4	3.53	49.2	4.20	53.5	4.89	58.1	5.50	59.9	5.63	62.3	5.80	64.1	5.92
		26.4	45.4	3.44	49.2	4.10	53.5	4.78	58.1	5.40	59.9	5.53	62.3	5.68	64.1	5.77
120	50	7.9	63.3	1.41	68.6	1.63	74.6	1.92	81.2	2.15	83.7	2.21	86.9	2.26	89.3	2.30
		10.6	63.3	1.38	68.6	1.60	74.6	1.88	81.2	2.11	83.7	2.17	86.9	2.22	89.3	2.26
		21.1	63.3	1.26	68.6	1.50	74.6	1.75	81.2	1.98	83.7	2.02	86.9	2.08	89.3	2.10
		26.4	63.3	1.25	68.6	1.47	74.6	1.73	81.2	1.94	83.7	1.98	86.9	2.04	89.3	2.07
	59	7.9	62.6	1.87	67.8	2.17	73.8	2.53	80.3	2.85	82.7	2.92	85.9	2.99	88.3	3.04
		10.6	62.6	1.83	67.8	2.13	73.8	2.49	80.3	2.80	82.7	2.87	85.9	2.94	88.3	2.99
		21.1	62.6	1.68	67.8	1.99	73.8	2.32	80.3	2.62	82.7	2.68	85.9	2.75	88.3	2.80
		26.4	62.6	1.64	67.8	1.95	73.8	2.28	80.3	2.57	82.7	2.63	85.9	2.70	88.3	2.74
	67	7.9	62.0	2.28	67.1	2.64	73.1	3.08	79.5	3.47	81.8	3.55	85.0	3.64	87.4	3.70
		10.6	62.0	2.23	67.1	2.60	73.1	3.03	79.5	3.41	81.8	3.49	85.0	3.58	87.4	3.64
		21.1	62.0	2.05	67.1	2.43	73.1	2.83	79.5	3.19	81.8	3.27	85.0	3.35	87.4	3.42
		26.4	62.0	1.99	67.1	2.38	73.1	2.77	79.5	3.13	81.8	3.21	85.0	3.29	87.4	3.34
	75	7.9	62.0	2.80	67.1	3.24	73.1	3.78	79.5	4.26	81.8	4.36	85.0	4.47	87.4	4.55
		10.6	62.0	2.74	67.1	3.19	73.1	3.72	79.5	4.19	81.8	4.29	85.0	4.40	87.4	4.48
		21.1	62.0	2.52	67.1	2.99	73.1	3.48	79.5	3.92	81.8	4.01	85.0	4.12	87.4	4.20
		26.4	62.0	2.45	67.1	2.92	73.1	3.41	79.5	3.84	81.8	3.94	85.0	4.04	87.4	4.10
	85	7.9	62.0	3.38	67.1	3.92	73.1	4.57	79.5	5.15	81.8	5.28	85.0	5.41	87.4	5.49
		10.6	62.0	3.31	67.1	3.86	73.1	4.50	79.5	5.07	81.8	5.19	85.0	5.32	87.4	5.41
		21.1	62.0	3.05	67.1	3.61	73.1	4.21	79.5	4.74	81.8	4.85	85.0	4.98	87.4	5.08
		26.4	62.0	2.96	67.1	3.53	73.1	4.12	79.5	4.64	81.8	4.76	85.0	4.89	87.4	4.96
	95	7.9	56.7	3.46	61.4	4.03	66.9	4.69	72.7	5.27	74.9	5.41	77.8	5.54	80.0	5.64
		10.6	56.7	3.39	61.4	3.96	66.9	4.61	72.7	5.19	74.9	5.32	77.8	5.45	80.0	5.55
		21.1	56.7	3.12	61.4	3.70	66.9	4.31	72.7	4.86	74.9	4.98	77.8	5.11	80.0	5.20
		26.4	56.7	3.04	61.4	3.62	66.9	4.22	72.7	4.76	74.9	4.88	77.8	5.01	80.0	5.08
	104	7.9	51.5	3.72	55.7	4.33	60.7	5.04	66.0	5.68	67.9	5.81	70.6	5.95	72.6	6.06
		10.6	51.5	3.65	55.7	4.26	60.7	4.96	66.0	5.59	67.9	5.72	70.6	5.86	72.6	5.97
		21.1	51.5	3.36	55.7	3.98	60.7	4.64	66.0	5.23	67.9	5.35	70.6	5.49	72.6	5.60
		26.4	51.5	3.27	55.7	3.90	60.7	4.55	66.0	5.12	67.9	5.25	70.6	5.39	72.6	5.47
	113	7.9	46.3	3.99	50.0	4.64	54.5	5.40	59.3	6.09	60.9	6.22	63.4	6.37	65.2	6.49
		10.6	46.3	3.91	50.0	4.56	54.5	5.31	59.3	5.99	60.9	6.12	63.4	6.27	65.2	6.39
		21.1	46.3	3.60	50.0	4.26	54.5	4.97	59.3	5.60	60.9	5.72	63.4	5.87	65.2	6.00
		26.4	46.3	3.50	50.0	4.18	54.5	4.88	59.3	5.48	60.9	5.62	63.4	5.77	65.2	5.86

TC = Total Cooling Capacity (MBh).
PI = Power input (KW).
Power input (KW) includes compressor(s) and controls.
Test condition based on 25 feet of equivalent refrigerant piping and no change in elevation between indoor unit and water source unit.

Due to our policy of continuous product innovation, some specifications may change without notification.
©LG Electronics U.S.A., Inc., Englewood Cliffs, NJ. All rights reserved. "LG" is a registered trademark of LG Corp.

Table 19b: Cooling Capacity ARWB072BA2 / ARWN072BA2

Combination Ratio (%) (Capacity index)	Inlet Water Temperature (°F)	Water Flow Rate (gpm)	Indoor Unit Entering Air Wet Bulb Temperature °F													
			57		61		64		67		70		73		76	
			TC	PI	TC	PI	TC	PI	TC	PI	TC	PI	TC	PI	TC	PI
			MBh	kW	MBh	kW	MBh	kW	MBh	kW	MBh	kW	MBh	kW	MBh	kW
110	50	7.9	59.7	1.34	64.6	1.55	70.3	1.79	76.6	2.03	78.9	2.06	82.1	2.13	84.2	2.15
		10.6	59.7	1.31	64.6	1.52	70.3	1.76	76.6	2.00	78.9	2.03	82.1	2.09	84.2	2.12
		21.1	59.7	1.21	64.6	1.42	70.3	1.66	76.6	1.87	78.9	1.92	82.1	1.95	84.2	1.98
		26.4	59.7	1.17	64.6	1.39	70.3	1.62	76.6	1.83	78.9	1.87	82.1	1.91	84.2	1.96
	59	7.9	59.4	1.79	64.3	2.08	70.0	2.41	76.1	2.71	78.4	2.77	81.5	2.85	83.7	2.90
		10.6	59.4	1.75	64.3	2.04	70.0	2.37	76.1	2.67	78.4	2.73	81.5	2.80	83.7	2.85
		21.1	59.4	1.61	64.3	1.90	70.0	2.22	76.1	2.50	78.4	2.56	81.5	2.62	83.7	2.67
		26.4	59.4	1.56	64.3	1.86	70.0	2.17	76.1	2.45	78.4	2.51	81.5	2.57	83.7	2.61
	67	7.9	59.1	2.18	64.0	2.54	69.7	2.96	75.7	3.32	78.0	3.41	81.0	3.48	83.3	3.56
		10.6	59.1	2.14	64.0	2.50	69.7	2.91	75.7	3.27	78.0	3.35	81.0	3.43	83.3	3.50
		21.1	59.1	1.97	64.0	2.33	69.7	2.72	75.7	3.06	78.0	3.13	81.0	3.22	83.3	3.28
		26.4	59.1	1.91	64.0	2.28	69.7	2.66	75.7	3.00	78.0	3.08	81.0	3.16	83.3	3.19
	75	7.9	59.1	2.67	64.0	3.11	69.7	3.62	75.7	4.08	78.0	4.17	81.0	4.27	83.3	4.35
		10.6	59.1	2.62	64.0	3.06	69.7	3.56	75.7	4.01	78.0	4.10	81.0	4.20	83.3	4.28
		21.1	59.1	2.41	64.0	2.86	69.7	3.33	75.7	3.75	78.0	3.84	81.0	3.94	83.3	4.01
		26.4	59.1	2.34	64.0	2.80	69.7	3.26	75.7	3.67	78.0	3.77	81.0	3.86	83.3	3.91
	85	7.9	59.1	3.25	64.0	3.79	69.7	4.41	75.7	4.97	78.0	5.08	81.0	5.21	83.3	5.30
		10.6	59.1	3.19	64.0	3.73	69.7	4.34	75.7	4.89	78.0	5.00	81.0	5.13	83.3	5.22
		21.1	59.1	2.94	64.0	3.48	69.7	4.06	75.7	4.57	78.0	4.68	81.0	4.80	83.3	4.89
		26.4	59.1	2.86	64.0	3.41	69.7	3.97	75.7	4.48	78.0	4.59	81.0	4.71	83.3	4.77
	95	7.9	55.0	3.39	59.6	3.93	64.9	4.58	70.6	5.16	72.7	5.28	75.5	5.42	77.6	5.52
		10.6	55.0	3.32	59.6	3.87	64.9	4.51	70.6	5.08	72.7	5.20	75.5	5.33	77.6	5.43
		21.1	55.0	3.05	59.6	3.62	64.9	4.22	70.6	4.75	72.7	4.87	75.5	4.99	77.6	5.08
		26.4	55.0	2.97	59.6	3.54	64.9	4.13	70.6	4.66	72.7	4.77	75.5	4.90	77.6	4.96
	104	7.9	51.0	3.73	55.2	4.32	60.2	5.04	65.4	5.67	67.3	5.80	70.0	5.94	71.9	6.05
		10.6	51.0	3.65	55.2	4.25	60.2	4.96	65.4	5.58	67.3	5.71	70.0	5.85	71.9	5.96
		21.1	51.0	3.35	55.2	3.98	60.2	4.63	65.4	5.22	67.3	5.34	70.0	5.48	71.9	5.59
		26.4	51.0	3.26	55.2	3.89	60.2	4.54	65.4	5.12	67.3	5.24	70.0	5.38	71.9	5.45
	113	7.9	47.0	4.06	50.8	4.70	55.5	5.50	60.2	6.18	61.9	6.32	64.5	6.47	66.2	6.59
		10.6	47.0	3.98	50.8	4.63	55.5	5.41	60.2	6.08	61.9	6.22	64.5	6.37	66.2	6.49
		21.1	47.0	3.65	50.8	4.34	55.5	5.04	60.2	5.69	61.9	5.81	64.5	5.97	66.2	6.10
		26.4	47.0	3.55	50.8	4.24	55.5	4.95	60.2	5.58	61.9	5.71	64.5	5.86	66.2	5.94
100	50	7.9	56.2	1.25	60.8	1.46	66.2	1.69	72.0	1.89	74.2	1.94	77.0	2.00	79.2	2.05
		10.6	56.2	1.22	60.8	1.43	66.2	1.66	72.0	1.87	74.2	1.91	77.0	1.97	79.2	2.01
		21.1	56.2	1.13	60.8	1.33	66.2	1.56	72.0	1.76	74.2	1.81	77.0	1.85	79.2	1.87
		26.4	56.2	1.11	60.8	1.30	66.2	1.53	72.0	1.71	74.2	1.76	77.0	1.81	79.2	1.84
	59	7.9	56.2	1.69	60.8	1.97	66.2	2.30	72.0	2.58	74.2	2.64	77.0	2.71	79.2	2.77
		10.6	56.2	1.66	60.8	1.94	66.2	2.26	72.0	2.54	74.2	2.60	77.0	2.67	79.2	2.72
		21.1	56.2	1.53	60.8	1.81	66.2	2.11	72.0	2.38	74.2	2.44	77.0	2.50	79.2	2.54
		26.4	56.2	1.49	60.8	1.77	66.2	2.07	72.0	2.33	74.2	2.39	77.0	2.45	79.2	2.48
	67	7.9	56.2	2.09	60.8	2.43	66.2	2.84	72.0	3.19	74.2	3.26	77.0	3.34	79.2	3.40
		10.6	56.2	2.05	60.8	2.39	66.2	2.79	72.0	3.14	74.2	3.21	77.0	3.29	79.2	3.35
		21.1	56.2	1.89	60.8	2.24	66.2	2.60	72.0	2.93	74.2	3.00	77.0	3.08	79.2	3.14
		26.4	56.2	1.83	60.8	2.19	66.2	2.55	72.0	2.88	74.2	2.95	77.0	3.02	79.2	3.05
	75	7.9	56.2	2.55	60.8	2.97	66.2	3.46	72.0	3.89	74.2	3.99	77.0	4.07	79.2	4.16
		10.6	56.2	2.50	60.8	2.92	66.2	3.40	72.0	3.83	74.2	3.92	77.0	4.01	79.2	4.09
		21.1	56.2	2.30	60.8	2.73	66.2	3.18	72.0	3.58	74.2	3.66	77.0	3.76	79.2	3.82
		26.4	56.2	2.24	60.8	2.67	66.2	3.11	72.0	3.51	74.2	3.59	77.0	3.69	79.2	3.72
	85	7.9	56.2	3.14	60.8	3.65	66.2	4.25	72.0	4.79	74.2	4.90	77.0	5.02	79.2	5.11
		10.6	56.2	3.08	60.8	3.59	66.2	4.18	72.0	4.71	74.2	4.82	77.0	4.94	79.2	5.03
		21.1	56.2	2.83	60.8	3.35	66.2	3.91	72.0	4.40	74.2	4.50	77.0	4.62	79.2	4.70
		26.4	56.2	2.75	60.8	3.28	66.2	3.83	72.0	4.31	74.2	4.42	77.0	4.53	79.2	4.58
	95	7.9	53.4	3.32	57.8	3.85	62.9	4.48	68.4	5.05	70.5	5.17	73.2	5.29	75.2	5.39
		10.6	53.4	3.25	57.8	3.79	62.9	4.41	68.4	4.97	70.5	5.09	73.2	5.21	75.2	5.30
		21.1	53.4	2.99	57.8	3.54	62.9	4.12	68.4	4.64	70.5	4.76	73.2	4.88	75.2	4.96
		26.4	53.4	2.90	57.8	3.47	62.9	4.04	68.4	4.55	70.5	4.67	73.2	4.79	75.2	4.83
	104	7.9	50.5	3.71	54.7	4.32	59.6	5.03	64.8	5.66	66.7	5.81	69.3	5.95	71.3	6.05
		10.6	50.5	3.64	54.7	4.25	59.6	4.95	64.8	5.57	66.7	5.71	69.3	5.85	71.3	5.95
		21.1	50.5	3.35	54.7	3.97	59.6	4.63	64.8	5.21	66.7	5.33	69.3	5.47	71.3	5.57
		26.4	50.5	3.26	54.7	3.89	59.6	4.53	64.8	5.11	66.7	5.24	69.3	5.37	71.3	5.42
	113	7.9	47.6	4.11	51.6	4.79	56.3	5.58	61.2	6.27	62.9	6.44	65.4	6.60	67.4	6.71
		10.6	47.6	4.03	51.6	4.71	56.3	5.49	61.2	6.17	62.9	6.33	65.4	6.49	67.4	6.60
		21.1	47.6	3.71	51.6	4.40	56.3	5.14	61.2	5.78	62.9	5.90	65.4	6.06	67.4	6.18
		26.4	47.6	3.62	51.6	4.31	56.3	5.02	61.2	5.67	62.9	5.81	65.4	5.95	67.4	6.01

TC = Total Cooling Capacity (MBh).
PI = Power input (KW).
Power input (KW) includes compressor(s) and controls.
Test condition based on 25 feet of equivalent refrigerant piping and no change in elevation between indoor unit and water source unit.

LG

Due to our policy of continuous product innovation, some specifications may change without notification.
©LG Electronics U.S.A., Inc., Englewood Cliffs, NJ. All rights reserved. "LG" is a registered trademark of LG Corp.

PERFORMANCE DATA

Cooling Capacity—ARWB072BA2 / ARWN072BA2 (208/230 Volt)

Table 19c: Cooling Capacity ARWB072BA2 / ARWN072BA2

Combination Ratio (%) (Capacity index)	Inlet Water Temperature (°F)	Water Flow Rate (gpm)	Indoor Unit Entering Air Wet Bulb Temperature °F													
			57		61		64		67		70		73		76	
			TC MBh	PI kW	TC MBh	PI kW	TC MBh	PI kW	TC MBh	PI kW	TC MBh	PI kW	TC MBh	PI kW	TC MBh	PI kW
90	50	7.9	50.5	1.08	54.7	1.25	59.6	1.44	64.8	1.64	66.7	1.68	69.3	1.73	71.3	1.76
		10.6	50.5	1.06	54.7	1.23	59.6	1.42	64.8	1.62	66.7	1.66	69.3	1.70	71.3	1.73
		21.1	50.5	0.98	54.7	1.16	59.6	1.35	64.8	1.52	66.7	1.55	69.3	1.59	71.3	1.62
		26.4	50.5	0.94	54.7	1.14	59.6	1.31	64.8	1.48	66.7	1.52	69.3	1.56	71.3	1.57
	59	7.9	50.5	1.46	54.7	1.70	59.6	1.97	64.8	2.23	66.7	2.28	69.3	2.34	71.3	2.38
		10.6	50.5	1.43	54.7	1.67	59.6	1.94	64.8	2.19	66.7	2.24	69.3	2.30	71.3	2.34
		21.1	50.5	1.32	54.7	1.56	59.6	1.82	64.8	2.05	66.7	2.10	69.3	2.15	71.3	2.19
		26.4	50.5	1.28	54.7	1.53	59.6	1.78	64.8	2.01	66.7	2.06	69.3	2.11	71.3	2.13
	67	7.9	50.5	1.80	54.7	2.10	59.6	2.44	64.8	2.75	66.7	2.80	69.3	2.88	71.3	2.93
		10.6	50.5	1.76	54.7	2.06	59.6	2.40	64.8	2.70	66.7	2.76	69.3	2.83	71.3	2.88
		21.1	50.5	1.62	54.7	1.92	59.6	2.24	64.8	2.52	66.7	2.59	69.3	2.65	71.3	2.70
		26.4	50.5	1.58	54.7	1.88	59.6	2.20	64.8	2.48	66.7	2.54	69.3	2.60	71.3	2.63
	75	7.9	50.5	2.19	54.7	2.55	59.6	2.97	64.8	3.34	66.7	3.43	69.3	3.51	71.3	3.58
		10.6	50.5	2.15	54.7	2.51	59.6	2.92	64.8	3.29	66.7	3.37	69.3	3.45	71.3	3.52
		21.1	50.5	1.98	54.7	2.35	59.6	2.73	64.8	3.08	66.7	3.15	69.3	3.23	71.3	3.29
		26.4	50.5	1.92	54.7	2.30	59.6	2.68	64.8	3.02	66.7	3.09	69.3	3.17	71.3	3.21
	85	7.9	50.5	2.71	54.7	3.14	59.6	3.66	64.8	4.12	66.7	4.22	69.3	4.32	71.3	4.40
		10.6	50.5	2.65	54.7	3.09	59.6	3.60	64.8	4.05	66.7	4.15	69.3	4.25	71.3	4.33
		21.1	50.5	2.43	54.7	2.89	59.6	3.36	64.8	3.79	66.7	3.88	69.3	3.98	71.3	4.05
		26.4	50.5	2.37	54.7	2.83	59.6	3.29	64.8	3.71	66.7	3.81	69.3	3.90	71.3	3.94
	95	7.9	49.1	2.92	53.2	3.38	58.0	3.94	63.0	4.44	64.9	4.54	67.4	4.65	69.3	4.75
		10.6	49.1	2.86	53.2	3.33	58.0	3.88	63.0	4.37	64.9	4.47	67.4	4.58	69.3	4.67
		21.1	49.1	2.63	53.2	3.12	58.0	3.63	63.0	4.09	64.9	4.18	67.4	4.29	69.3	4.37
		26.4	49.1	2.55	53.2	3.05	58.0	3.55	63.0	4.01	64.9	4.11	67.4	4.21	69.3	4.25
	104	7.9	47.7	3.35	51.7	3.89	56.3	4.53	61.2	5.10	63.0	5.22	65.5	5.36	67.3	5.45
		10.6	47.7	3.28	51.7	3.83	56.3	4.46	61.2	5.02	63.0	5.14	65.5	5.27	67.3	5.36
		21.1	47.7	3.02	51.7	3.58	56.3	4.17	61.2	4.69	63.0	4.81	65.5	4.93	67.3	5.02
		26.4	47.7	2.93	51.7	3.50	56.3	4.08	61.2	4.60	63.0	4.72	65.5	4.84	67.3	4.89
	113	7.9	46.3	3.77	50.2	4.40	54.6	5.12	59.4	5.77	61.1	5.90	63.6	6.06	65.3	6.15
		10.6	46.3	3.70	50.2	4.33	54.6	5.04	59.4	5.67	61.1	5.81	63.6	5.96	65.3	6.05
		21.1	46.3	3.41	50.2	4.04	54.6	4.71	59.4	5.29	61.1	5.44	63.6	5.57	65.3	5.67
		26.4	46.3	3.31	50.2	3.95	54.6	4.61	59.4	5.19	61.1	5.33	63.6	5.47	65.3	5.53
80	50	7.9	44.9	0.90	48.7	1.04	53.0	1.22	57.6	1.39	59.3	1.41	61.6	1.46	63.4	1.47
		10.6	44.9	0.89	48.7	1.03	53.0	1.20	57.6	1.37	59.3	1.39	61.6	1.44	63.4	1.44
		21.1	44.9	0.81	48.7	0.97	53.0	1.12	57.6	1.27	59.3	1.30	61.6	1.33	63.4	1.35
		26.4	44.9	0.79	48.7	0.94	53.0	1.10	57.6	1.23	59.3	1.26	61.6	1.31	63.4	1.33
	59	7.9	44.9	1.23	48.7	1.42	53.0	1.66	57.6	1.87	59.3	1.91	61.6	1.96	63.4	1.99
		10.6	44.9	1.20	48.7	1.40	53.0	1.63	57.6	1.84	59.3	1.88	61.6	1.93	63.4	1.96
		21.1	44.9	1.10	48.7	1.31	53.0	1.52	57.6	1.72	59.3	1.76	61.6	1.80	63.4	1.83
		26.4	44.9	1.07	48.7	1.28	53.0	1.49	57.6	1.68	59.3	1.72	61.6	1.77	63.4	1.79
	67	7.9	44.9	1.51	48.7	1.76	53.0	2.04	57.6	2.30	59.3	2.36	61.6	2.41	63.4	2.46
		10.6	44.9	1.48	48.7	1.73	53.0	2.01	57.6	2.26	59.3	2.32	61.6	2.37	63.4	2.42
		21.1	44.9	1.36	48.7	1.61	53.0	1.88	57.6	2.12	59.3	2.17	61.6	2.22	63.4	2.26
		26.4	44.9	1.32	48.7	1.58	53.0	1.84	57.6	2.08	59.3	2.13	61.6	2.18	63.4	2.20
	75	7.9	44.9	1.84	48.7	2.13	53.0	2.49	57.6	2.81	59.3	2.88	61.6	2.95	63.4	3.00
		10.6	44.9	1.80	48.7	2.10	53.0	2.45	57.6	2.76	59.3	2.83	61.6	2.90	63.4	2.95
		21.1	44.9	1.66	48.7	1.97	53.0	2.29	57.6	2.58	59.3	2.64	61.6	2.71	63.4	2.76
		26.4	44.9	1.61	48.7	1.93	53.0	2.25	57.6	2.53	59.3	2.59	61.6	2.66	63.4	2.69
	85	7.9	44.9	2.27	48.7	2.63	53.0	3.07	57.6	3.46	59.3	3.54	61.6	3.62	63.4	3.69
		10.6	44.9	2.22	48.7	2.59	53.0	3.02	57.6	3.40	59.3	3.48	61.6	3.56	63.4	3.63
		21.1	44.9	2.04	48.7	2.42	53.0	2.82	57.6	3.17	59.3	3.25	61.6	3.33	63.4	3.39
		26.4	44.9	1.98	48.7	2.37	53.0	2.76	57.6	3.11	59.3	3.19	61.6	3.27	63.4	3.30
	95	7.9	44.9	2.52	48.7	2.93	53.0	3.41	57.6	3.83	59.3	3.92	61.6	4.03	63.4	4.10
		10.6	44.9	2.47	48.7	2.88	53.0	3.35	57.6	3.77	59.3	3.86	61.6	3.96	63.4	4.03
		21.1	44.9	2.27	48.7	2.69	53.0	3.13	57.6	3.53	59.3	3.61	61.6	3.70	63.4	3.77
		26.4	44.9	2.21	48.7	2.63	53.0	3.07	57.6	3.46	59.3	3.54	61.6	3.64	63.4	3.67
	104	7.9	44.9	2.98	48.7	3.47	53.0	4.04	57.6	4.54	59.3	4.64	61.6	4.77	63.4	4.85
		10.6	44.9	2.92	48.7	3.41	53.0	3.97	57.6	4.47	59.3	4.57	61.6	4.69	63.4	4.77
		21.1	44.9	2.69	48.7	3.18	53.0	3.71	57.6	4.18	59.3	4.28	61.6	4.39	63.4	4.47
		26.4	44.9	2.61	48.7	3.12	53.0	3.63	57.6	4.10	59.3	4.20	61.6	4.30	63.4	4.35
	113	7.9	44.9	3.44	48.7	4.01	53.0	4.67	57.6	5.26	59.3	5.36	61.6	5.51	63.4	5.60
		10.6	44.9	3.37	48.7	3.94	53.0	4.59	57.6	5.17	59.3	5.28	61.6	5.42	63.4	5.51
		21.1	44.9	3.11	48.7	3.67	53.0	4.29	57.6	4.83	59.3	4.95	61.6	5.08	63.4	5.17
		26.4	44.9	3.01	48.7	3.61	53.0	4.19	57.6	4.74	59.3	4.86	61.6	4.96	63.4	5.03

TC = Total Cooling Capacity (MBh).
PI = Power input (KW).
Power input (KW) includes compressor(s) and controls.
Test condition based on 25 feet of equivalent refrigerant piping and no change in elevation between indoor unit and water source unit.

Due to our policy of continuous product innovation, some specifications may change without notification.
©LG Electronics U.S.A., Inc., Englewood Cliffs, NJ. All rights reserved. "LG" is a registered trademark of LG Corp.

PERFORMANCE DATA

Cooling Capacity—ARWB072BA2 / ARWN072BA2 (208/230 Volt)

Table 19d: Cooling Capacity ARWB072BA2 / ARWN072BA2

Combination Ratio (%) (Capacity index)	Inlet Water Temperature (°F)	Water Flow Rate (gpm)	Indoor Unit Entering Air Wet Bulb Temperature °F													
			57		61		64		67		70		73		76	
			TC	PI	TC	PI	TC	PI	TC	PI	TC	PI	TC	PI	TC	PI
			MBh	kW	MBh	kW	MBh	kW	MBh	kW	MBh	kW	MBh	kW	MBh	kW
70	50	7.9	39.3	0.76	42.6	0.87	46.4	1.03	50.4	1.16	51.9	1.16	53.9	1.20	55.4	1.22
		10.6	39.3	0.74	42.6	0.86	46.4	1.01	50.4	1.14	51.9	1.14	53.9	1.18	55.4	1.20
		21.1	39.3	0.68	42.6	0.81	46.4	0.94	50.4	1.06	51.9	1.08	53.9	1.11	55.4	1.14
		26.4	39.3	0.65	42.6	0.78	46.4	0.91	50.4	1.03	51.9	1.05	53.9	1.09	55.4	1.11
	59	7.9	39.3	1.02	42.6	1.18	46.4	1.38	50.4	1.56	51.9	1.59	53.9	1.63	55.4	1.66
		10.6	39.3	1.00	42.6	1.16	46.4	1.36	50.4	1.53	51.9	1.56	53.9	1.60	55.4	1.63
		21.1	39.3	0.92	42.6	1.09	46.4	1.27	50.4	1.43	51.9	1.46	53.9	1.50	55.4	1.53
		26.4	39.3	0.89	42.6	1.06	46.4	1.24	50.4	1.40	51.9	1.43	53.9	1.47	55.4	1.49
	67	7.9	39.3	1.26	42.6	1.45	46.4	1.70	50.4	1.91	51.9	1.96	53.9	2.00	55.4	2.04
		10.6	39.3	1.23	42.6	1.43	46.4	1.67	50.4	1.88	51.9	1.93	53.9	1.97	55.4	2.01
		21.1	39.3	1.13	42.6	1.34	46.4	1.56	50.4	1.76	51.9	1.80	53.9	1.85	55.4	1.88
		26.4	39.3	1.10	42.6	1.31	46.4	1.53	50.4	1.73	51.9	1.77	53.9	1.81	55.4	1.83
	75	7.9	39.3	1.53	42.6	1.78	46.4	2.07	50.4	2.34	51.9	2.39	53.9	2.45	55.4	2.49
		10.6	39.3	1.50	42.6	1.75	46.4	2.04	50.4	2.30	51.9	2.35	53.9	2.41	55.4	2.45
		21.1	39.3	1.38	42.6	1.64	46.4	1.91	50.4	2.15	51.9	2.20	53.9	2.25	55.4	2.29
		26.4	39.3	1.34	42.6	1.60	46.4	1.87	50.4	2.10	51.9	2.16	53.9	2.21	55.4	2.23
	85	7.9	39.3	1.89	42.6	2.19	46.4	2.55	50.4	2.87	51.9	2.94	53.9	3.01	55.4	3.06
		10.6	39.3	1.85	42.6	2.15	46.4	2.51	50.4	2.82	51.9	2.89	53.9	2.96	55.4	3.01
		21.1	39.3	1.70	42.6	2.01	46.4	2.34	50.4	2.64	51.9	2.70	53.9	2.77	55.4	2.82
		26.4	39.3	1.65	42.6	1.97	46.4	2.30	50.4	2.59	51.9	2.65	53.9	2.72	55.4	2.75
	95	7.9	39.3	2.09	42.6	2.43	46.4	2.84	50.4	3.19	51.9	3.26	53.9	3.34	55.4	3.40
		10.6	39.3	2.05	42.6	2.39	46.4	2.79	50.4	3.14	51.9	3.21	53.9	3.29	55.4	3.35
		21.1	39.3	1.89	42.6	2.24	46.4	2.60	50.4	2.93	51.9	3.00	53.9	3.08	55.4	3.14
		26.4	39.3	1.83	42.6	2.19	46.4	2.55	50.4	2.88	51.9	2.95	53.9	3.02	55.4	3.05
	104	7.9	39.3	2.48	42.6	2.88	46.4	3.36	50.4	3.77	51.9	3.86	53.9	3.96	55.4	4.04
		10.6	39.3	2.43	42.6	2.83	46.4	3.30	50.4	3.71	51.9	3.80	53.9	3.90	55.4	3.97
		21.1	39.3	2.23	42.6	2.65	46.4	3.08	50.4	3.47	51.9	3.56	53.9	3.65	55.4	3.71
		26.4	39.3	2.17	42.6	2.59	46.4	3.02	50.4	3.41	51.9	3.49	53.9	3.58	55.4	3.62
	113	7.9	39.3	2.87	42.6	3.32	46.4	3.87	50.4	4.35	51.9	4.46	53.9	4.58	55.4	4.67
		10.6	39.3	2.81	42.6	3.27	46.4	3.81	50.4	4.28	51.9	4.39	53.9	4.51	55.4	4.59
		21.1	39.3	2.57	42.6	3.06	46.4	3.56	50.4	4.01	51.9	4.12	53.9	4.22	55.4	4.28
		26.4	39.3	2.51	42.6	2.99	46.4	3.49	50.4	3.94	51.9	4.03	53.9	4.14	55.4	4.19
60	50	7.9	33.7	0.61	36.5	0.71	39.7	0.81	43.2	0.92	44.5	0.94	46.2	0.97	47.5	0.98
		10.6	33.7	0.60	36.5	0.69	39.7	0.80	43.2	0.91	44.5	0.92	46.2	0.95	47.5	0.96
		21.1	33.7	0.54	36.5	0.65	39.7	0.74	43.2	0.85	44.5	0.85	46.2	0.88	47.5	0.91
		26.4	33.7	0.52	36.5	0.63	39.7	0.73	43.2	0.83	44.5	0.84	46.2	0.86	47.5	0.87
	59	7.9	33.7	0.82	36.5	0.95	39.7	1.10	43.2	1.24	44.5	1.27	46.2	1.30	47.5	1.32
		10.6	33.7	0.80	36.5	0.93	39.7	1.08	43.2	1.22	44.5	1.25	46.2	1.28	47.5	1.30
		21.1	33.7	0.73	36.5	0.87	39.7	1.01	43.2	1.14	44.5	1.16	46.2	1.19	47.5	1.22
		26.4	33.7	0.71	36.5	0.85	39.7	0.99	43.2	1.12	44.5	1.14	46.2	1.17	47.5	1.18
	67	7.9	33.7	1.00	36.5	1.16	39.7	1.35	43.2	1.53	44.5	1.57	46.2	1.60	47.5	1.63
		10.6	33.7	0.98	36.5	1.14	39.7	1.33	43.2	1.50	44.5	1.54	46.2	1.57	47.5	1.60
		21.1	33.7	0.90	36.5	1.07	39.7	1.25	43.2	1.40	44.5	1.44	46.2	1.47	47.5	1.50
		26.4	33.7	0.88	36.5	1.05	39.7	1.22	43.2	1.38	44.5	1.41	46.2	1.45	47.5	1.46
	75	7.9	33.7	1.23	36.5	1.41	39.7	1.65	43.2	1.86	44.5	1.90	46.2	1.95	47.5	1.98
		10.6	33.7	1.20	36.5	1.39	39.7	1.62	43.2	1.83	44.5	1.87	46.2	1.92	47.5	1.95
		21.1	33.7	1.10	36.5	1.30	39.7	1.52	43.2	1.71	44.5	1.75	46.2	1.80	47.5	1.83
		26.4	33.7	1.07	36.5	1.28	39.7	1.49	43.2	1.68	44.5	1.72	46.2	1.76	47.5	1.78
	85	7.9	33.7	1.50	36.5	1.75	39.7	2.03	43.2	2.29	44.5	2.34	46.2	2.40	47.5	2.44
		10.6	33.7	1.47	36.5	1.72	39.7	2.00	43.2	2.25	44.5	2.30	46.2	2.36	47.5	2.40
		21.1	33.7	1.35	36.5	1.60	39.7	1.87	43.2	2.10	44.5	2.15	46.2	2.21	47.5	2.25
		26.4	33.7	1.32	36.5	1.57	39.7	1.83	43.2	2.06	44.5	2.11	46.2	2.17	47.5	2.19
	95	7.9	33.7	1.66	36.5	1.94	39.7	2.26	43.2	2.54	44.5	2.60	46.2	2.66	47.5	2.71
		10.6	33.7	1.63	36.5	1.91	39.7	2.22	43.2	2.50	44.5	2.56	46.2	2.62	47.5	2.67
		21.1	33.7	1.50	36.5	1.78	39.7	2.08	43.2	2.34	44.5	2.39	46.2	2.46	47.5	2.50
		26.4	33.7	1.46	36.5	1.74	39.7	2.03	43.2	2.29	44.5	2.35	46.2	2.41	47.5	2.43
	104	7.9	33.7	1.98	36.5	2.30	39.7	2.67	43.2	3.01	44.5	3.08	46.2	3.16	47.5	3.21
		10.6	33.7	1.94	36.5	2.26	39.7	2.63	43.2	2.96	44.5	3.03	46.2	3.11	47.5	3.16
		21.1	33.7	1.78	36.5	2.11	39.7	2.46	43.2	2.77	44.5	2.83	46.2	2.91	47.5	2.96
		26.4	33.7	1.73	36.5	2.07	39.7	2.41	43.2	2.71	44.5	2.78	46.2	2.85	47.5	2.88
	113	7.9	33.7	2.30	36.5	2.65	39.7	3.09	43.2	3.48	44.5	3.56	46.2	3.66	47.5	3.71
		10.6	33.7	2.25	36.5	2.61	39.7	3.04	43.2	3.42	44.5	3.50	46.2	3.60	47.5	3.65
		21.1	33.7	2.06	36.5	2.44	39.7	2.84	43.2	3.20	44.5	3.27	46.2	3.36	47.5	3.42
		26.4	33.7	2.00	36.5	2.40	39.7	2.79	43.2	3.13	44.5	3.21	46.2	3.29	47.5	3.33

TC = Total Cooling Capacity (MBh).
PI = Power input (KW).
Power input (KW) includes compressor(s) and controls.
Test condition based on 25 feet of equivalent refrigerant piping and no change in elevation between indoor unit and water source unit.

LG

Due to our policy of continuous product innovation, some specifications may change without notification.
©LG Electronics U.S.A., Inc., Englewood Cliffs, NJ. All rights reserved. "LG" is a registered trademark of LG Corp.

PERFORMANCE DATA

Cooling Capacity—ARWB072BA2 / ARWN072BA2 (208/230 Volt)

Table 19e: Cooling Capacity ARWB072BA2 / ARWN072BA2

Combination Ratio (%) (Capacity index)	Inlet Water Temperature (°F)	Water Flow Rate (gpm)	Indoor Unit Entering Air Wet Bulb Temperature °F													
			57		61		64		67		70		73		76	
			TC	PI	TC	PI	TC	PI	TC	PI	TC	PI	TC	PI	TC	PI
			MBh	kW	MBh	kW	MBh	kW	MBh	kW	MBh	kW	MBh	kW	MBh	kW
50	50	7.9	28.1	0.44	30.4	0.52	33.1	0.62	36.0	0.69	37.1	0.69	38.5	0.71	39.6	0.73
		10.6	28.1	0.43	30.4	0.51	33.1	0.61	36.0	0.67	37.1	0.68	38.5	0.70	39.6	0.72
		21.1	28.1	0.42	30.4	0.48	33.1	0.55	36.0	0.63	37.1	0.65	38.5	0.65	39.6	0.67
		26.4	28.1	0.40	30.4	0.46	33.1	0.55	36.0	0.61	37.1	0.63	38.5	0.63	39.6	0.64
	59	7.9	28.1	0.60	30.4	0.70	33.1	0.83	36.0	0.93	37.1	0.95	38.5	0.97	39.6	0.99
		10.6	28.1	0.59	30.4	0.69	33.1	0.81	36.0	0.91	37.1	0.93	38.5	0.95	39.6	0.97
		21.1	28.1	0.55	30.4	0.65	33.1	0.75	36.0	0.85	37.1	0.87	38.5	0.89	39.6	0.91
		26.4	28.1	0.53	30.4	0.63	33.1	0.74	36.0	0.83	37.1	0.85	38.5	0.87	39.6	0.88
	67	7.9	28.1	0.75	30.4	0.86	33.1	1.01	36.0	1.14	37.1	1.17	38.5	1.19	39.6	1.21
		10.6	28.1	0.73	30.4	0.85	33.1	0.99	36.0	1.12	37.1	1.15	38.5	1.17	39.6	1.19
		21.1	28.1	0.67	30.4	0.80	33.1	0.93	36.0	1.05	37.1	1.07	38.5	1.10	39.6	1.12
		26.4	28.1	0.65	30.4	0.78	33.1	0.91	36.0	1.03	37.1	1.05	38.5	1.08	39.6	1.09
	75	7.9	28.1	0.91	30.4	1.06	33.1	1.23	36.0	1.38	37.1	1.42	38.5	1.45	39.6	1.49
		10.6	28.1	0.89	30.4	1.04	33.1	1.21	36.0	1.36	37.1	1.40	38.5	1.43	39.6	1.46
		21.1	28.1	0.82	30.4	0.97	33.1	1.13	36.0	1.28	37.1	1.31	38.5	1.34	39.6	1.36
		26.4	28.1	0.80	30.4	0.95	33.1	1.11	36.0	1.25	37.1	1.28	38.5	1.31	39.6	1.33
	85	7.9	28.1	1.12	30.4	1.30	33.1	1.52	36.0	1.71	37.1	1.75	38.5	1.79	39.6	1.82
		10.6	28.1	1.10	30.4	1.28	33.1	1.49	36.0	1.68	37.1	1.72	38.5	1.76	39.6	1.79
		21.1	28.1	1.01	30.4	1.20	33.1	1.39	36.0	1.57	37.1	1.61	38.5	1.65	39.6	1.68
		26.4	28.1	0.98	30.4	1.17	33.1	1.36	36.0	1.54	37.1	1.58	38.5	1.62	39.6	1.63
	95	7.9	28.1	1.25	30.4	1.44	33.1	1.69	36.0	1.89	37.1	1.94	38.5	1.99	39.6	2.02
		10.6	28.1	1.22	30.4	1.42	33.1	1.66	36.0	1.86	37.1	1.91	38.5	1.96	39.6	1.99
		21.1	28.1	1.12	30.4	1.33	33.1	1.55	36.0	1.74	37.1	1.78	38.5	1.83	39.6	1.86
		26.4	28.1	1.09	30.4	1.30	33.1	1.52	36.0	1.71	37.1	1.75	38.5	1.80	39.6	1.81
	104	7.9	28.1	1.47	30.4	1.71	33.1	1.99	36.0	2.25	37.1	2.30	38.5	2.36	39.6	2.40
		10.6	28.1	1.44	30.4	1.68	33.1	1.96	36.0	2.21	37.1	2.26	38.5	2.32	39.6	2.36
		21.1	28.1	1.33	30.4	1.57	33.1	1.83	36.0	2.06	37.1	2.11	38.5	2.17	39.6	2.21
		26.4	28.1	1.29	30.4	1.54	33.1	1.80	36.0	2.02	37.1	2.07	38.5	2.13	39.6	2.15
	113	7.9	28.1	1.69	30.4	1.97	33.1	2.30	36.0	2.61	37.1	2.65	38.5	2.72	39.6	2.77
		10.6	28.1	1.66	30.4	1.94	33.1	2.26	36.0	2.56	37.1	2.61	38.5	2.68	39.6	2.73
		21.1	28.1	1.54	30.4	1.81	33.1	2.11	36.0	2.38	37.1	2.44	38.5	2.51	39.6	2.56
		26.4	28.1	1.49	30.4	1.78	33.1	2.08	36.0	2.33	37.1	2.39	38.5	2.46	39.6	2.49

TC = Total Cooling Capacity (MBh).
PI = Power input (KW).
Power input (KW) includes compressor(s) and controls.
Test condition based on 25 feet of equivalent refrigerant piping and no change in elevation between indoor unit and water source unit.

Due to our policy of continuous product innovation, some specifications may change without notification.
©LG Electronics U.S.A., Inc., Englewood Cliffs, NJ. All rights reserved. "LG" is a registered trademark of LG Corp.

Table 20a: Cooling Capacity ARWB144BA2 / ARWN144BA2

Combination Ratio (%) (Capacity index)	Inlet Water Temperature (°F)	Water Flow Rate (gpm)	Indoor Unit Entering Air Wet Bulb Temperature °F													
			57		61		64		67		70		73		76	
			TC MBh	PI kW	TC MBh	PI kW	TC MBh	PI kW	TC MBh	PI kW	TC MBh	PI kW	TC MBh	PI kW	TC MBh	PI kW
130	50	15.9	133.8	2.96	145.0	3.44	157.8	4.03	171.5	4.53	176.7	4.63	183.5	4.75	188.7	4.84
		21.2	133.8	2.91	145.0	3.39	157.8	3.96	171.5	4.46	176.7	4.56	183.5	4.68	188.7	4.77
		42.2	133.8	2.69	145.0	3.18	157.8	3.70	171.5	4.17	176.7	4.27	183.5	4.39	188.7	4.46
		52.8	133.8	2.60	145.0	3.10	157.8	3.62	171.5	4.08	176.7	4.18	183.5	4.29	188.7	4.37
	59	15.9	131.7	3.90	142.6	4.53	155.3	5.29	168.8	5.95	173.9	6.09	180.6	6.24	185.7	6.35
		21.2	131.7	3.82	142.6	4.46	155.3	5.20	168.8	5.85	173.9	5.99	180.6	6.14	185.7	6.25
		42.2	131.7	3.52	142.6	4.17	155.3	4.86	168.8	5.47	173.9	5.61	180.6	5.76	185.7	5.87
		52.8	131.7	3.42	142.6	4.08	155.3	4.76	168.8	5.36	173.9	5.50	180.6	5.64	185.7	5.74
	67	15.9	129.8	4.72	140.5	5.50	153.1	6.40	166.4	7.21	171.4	7.38	178.0	7.56	183.0	7.68
		21.2	129.8	4.63	140.5	5.41	153.1	6.30	166.4	7.09	171.4	7.26	178.0	7.44	183.0	7.57
		42.2	129.8	4.26	140.5	5.05	153.1	5.89	166.4	6.63	171.4	6.80	178.0	6.98	183.0	7.12
		52.8	129.8	4.15	140.5	4.95	153.1	5.77	166.4	6.50	171.4	6.67	178.0	6.84	183.0	6.96
	75	15.9	129.8	5.84	140.5	6.78	153.1	7.90	166.4	8.89	171.4	9.09	178.0	9.33	183.0	9.48
		21.2	129.8	5.72	140.5	6.67	153.1	7.77	166.4	8.75	171.4	8.95	178.0	9.18	183.0	9.34
		42.2	129.8	5.26	140.5	6.23	153.1	7.26	166.4	8.18	171.4	8.38	178.0	8.60	183.0	8.78
		52.8	129.8	5.11	140.5	6.10	153.1	7.11	166.4	8.02	171.4	8.23	178.0	8.44	183.0	8.58
	85	15.9	129.8	7.00	140.5	8.13	153.1	9.47	166.4	10.67	171.4	10.92	178.0	11.18	183.0	11.38
		21.2	129.8	6.86	140.5	8.00	153.1	9.32	166.4	10.50	171.4	10.75	178.0	11.01	183.0	11.21
		42.2	129.8	6.31	140.5	7.48	153.1	8.71	166.4	9.81	171.4	10.06	178.0	10.32	183.0	10.53
		52.8	129.8	6.13	140.5	7.32	153.1	8.54	166.4	9.62	171.4	9.87	178.0	10.12	183.0	10.29
	95	15.9	116.8	7.08	126.5	8.22	137.7	9.59	149.7	10.78	154.2	11.05	160.2	11.30	164.7	11.50
		21.2	116.8	6.94	126.5	8.09	137.7	9.43	149.7	10.61	154.2	10.87	160.2	11.13	164.7	11.33
		42.2	116.8	6.38	126.5	7.57	137.7	8.81	149.7	9.92	154.2	10.17	160.2	10.44	164.7	10.65
		52.8	116.8	6.20	126.5	7.40	137.7	8.63	149.7	9.73	154.2	9.98	160.2	10.24	164.7	10.41
	104	15.9	103.8	7.47	112.4	8.67	122.4	10.10	133.1	11.38	137.1	11.64	142.4	11.92	146.4	12.14
		21.2	103.8	7.32	112.4	8.53	122.4	9.94	133.1	11.20	137.1	11.46	142.4	11.74	146.4	11.96
		42.2	103.8	6.73	112.4	7.98	122.4	9.30	133.1	10.47	137.1	10.73	142.4	11.01	146.4	11.23
		52.8	103.8	6.54	112.4	7.81	122.4	9.10	133.1	10.26	137.1	10.53	142.4	10.80	146.4	10.98
	113	15.9	90.8	7.86	98.3	9.12	107.1	10.62	116.5	11.98	120.0	12.24	124.6	12.54	128.1	12.79
		21.2	90.8	7.70	98.3	8.97	107.1	10.45	116.5	11.79	120.0	12.05	124.6	12.35	128.1	12.59
		42.2	90.8	7.08	98.3	8.39	107.1	9.79	116.5	11.02	120.0	11.29	124.6	11.58	128.1	11.81
		52.8	90.8	6.88	98.3	8.22	107.1	9.57	116.5	10.79	120.0	11.08	124.6	11.36	128.1	11.55
120	50	15.9	126.7	2.82	137.2	3.28	149.4	3.80	162.3	4.30	167.3	4.39	173.8	4.50	178.6	4.59
		21.2	126.7	2.76	137.2	3.22	149.4	3.74	162.3	4.23	167.3	4.32	173.8	4.43	178.6	4.52
		42.2	126.7	2.53	137.2	3.01	149.4	3.51	162.3	3.94	167.3	4.04	173.8	4.15	178.6	4.24
		52.8	126.7	2.46	137.2	2.93	149.4	3.43	162.3	3.87	167.3	3.97	173.8	4.08	178.6	4.14
	59	15.9	125.2	3.74	135.6	4.34	147.7	5.05	160.5	5.69	165.4	5.82	171.8	5.96	176.6	6.07
		21.2	125.2	3.66	135.6	4.27	147.7	4.97	160.5	5.60	165.4	5.73	171.8	5.87	176.6	5.98
		42.2	125.2	3.36	135.6	3.99	147.7	4.65	160.5	5.23	165.4	5.36	171.8	5.50	176.6	5.61
		52.8	125.2	3.27	135.6	3.90	147.7	4.55	160.5	5.13	165.4	5.26	171.8	5.40	176.6	5.48
	67	15.9	123.9	4.55	134.2	5.29	146.2	6.16	158.9	6.93	163.7	7.09	170.0	7.26	174.8	7.39
		21.2	123.9	4.46	134.2	5.20	146.2	6.06	158.9	6.82	163.7	6.98	170.0	7.15	174.8	7.28
		42.2	123.9	4.10	134.2	4.86	146.2	5.66	158.9	6.38	163.7	6.53	170.0	6.70	174.8	6.83
		52.8	123.9	3.99	134.2	4.76	146.2	5.55	158.9	6.25	163.7	6.41	170.0	6.57	174.8	6.67
	75	15.9	123.9	5.59	134.2	6.50	146.2	7.56	158.9	8.52	163.7	8.72	170.0	8.93	174.8	9.09
		21.2	123.9	5.48	134.2	6.39	146.2	7.44	158.9	8.38	163.7	8.58	170.0	8.79	174.8	8.95
		42.2	123.9	5.04	134.2	5.97	146.2	6.96	158.9	7.84	163.7	8.03	170.0	8.24	174.8	8.40
		52.8	123.9	4.90	134.2	5.85	146.2	6.82	158.9	7.68	163.7	7.88	170.0	8.08	174.8	8.20
	85	15.9	123.9	6.75	134.2	7.86	146.2	9.15	158.9	10.29	163.7	10.55	170.0	10.80	174.8	10.99
		21.2	123.9	6.62	134.2	7.73	146.2	9.00	158.9	10.13	163.7	10.38	170.0	10.63	174.8	10.82
		42.2	123.9	6.09	134.2	7.22	146.2	8.41	158.9	9.48	163.7	9.71	170.0	9.96	174.8	10.16
		52.8	123.9	5.92	134.2	7.07	146.2	8.24	158.9	9.29	163.7	9.53	170.0	9.77	174.8	9.92
	95	15.9	113.4	6.93	122.8	8.05	133.8	9.37	145.4	10.56	149.8	10.81	155.6	11.07	160.0	11.26
		21.2	113.4	6.79	122.8	7.92	133.8	9.22	145.4	10.39	149.8	10.64	155.6	10.90	160.0	11.09
		42.2	113.4	6.24	122.8	7.40	133.8	8.62	145.4	9.71	149.8	9.95	155.6	10.21	160.0	10.41
		52.8	113.4	6.07	122.8	7.25	133.8	8.45	145.4	9.52	149.8	9.77	155.6	10.01	160.0	10.16
	104	15.9	102.9	7.46	111.4	8.66	121.4	10.09	131.9	11.36	135.9	11.64	141.2	11.92	145.1	12.13
		21.2	102.9	7.31	111.4	8.52	121.4	9.93	131.9	11.18	135.9	11.45	141.2	11.73	145.1	11.94
		42.2	102.9	6.72	111.4	7.97	121.4	9.28	131.9	10.45	135.9	10.71	141.2	10.99	145.1	11.20
		52.8	102.9	6.53	111.4	7.80	121.4	9.09	131.9	10.25	135.9	10.51	141.2	10.78	145.1	10.94
	113	15.9	92.4	7.99	100.0	9.27	109.0	10.82	118.4	12.17	122.0	12.46	126.8	12.76	130.2	12.99
		21.2	92.4	7.83	100.0	9.12	109.0	10.64	118.4	11.97	122.0	12.26	126.8	12.56	130.2	12.79
		42.2	92.4	7.20	100.0	8.54	109.0	9.94	118.4	11.19	122.0	11.47	126.8	11.77	130.2	11.99
		52.8	92.4	6.99	100.0	8.35	109.0	9.73	118.4	10.98	122.0	11.25	126.8	11.55	130.2	11.72

TC = Total Cooling Capacity (MBh).
PI = Power input (KW).
Power input (KW) includes compressor(s) and controls.
Test condition based on 25 feet of equivalent refrigerant piping and no change in elevation between indoor unit and water source unit.

LG

Due to our policy of continuous product innovation, some specifications may change without notification.
©LG Electronics U.S.A., Inc., Englewood Cliffs, NJ. All rights reserved. "LG" is a registered trademark of LG Corp.

PERFORMANCE DATA

Cooling Capacity—ARWB144BA2 / ARWN144BA2 (208/230 Volt)

Table 20b: Cooling Capacity ARWB144BA2 / ARWN144BA2

Combination Ratio (%) (Capacity index)	Inlet Water Temperature (°F)	Water Flow Rate (gpm)	Indoor Unit Entering Air Wet Bulb Temperature °F													
			57		61		64		67		70		73		76	
			TC MBh	PI kW	TC MBh	PI kW	TC MBh	PI kW	TC MBh	PI kW	TC MBh	PI kW	TC MBh	PI kW	TC MBh	PI kW
110	50	15.9	119.6	2.65	129.4	3.08	141.0	3.59	153.2	4.04	157.7	4.15	163.8	4.23	168.5	4.34
		21.2	119.6	2.60	129.4	3.04	141.0	3.54	153.2	3.98	157.7	4.09	163.8	4.17	168.5	4.27
		42.2	119.6	2.39	129.4	2.84	141.0	3.32	153.2	3.72	157.7	3.83	163.8	3.92	168.5	4.00
		52.8	119.6	2.32	129.4	2.79	141.0	3.24	153.2	3.66	157.7	3.75	163.8	3.85	168.5	3.88
	59	15.9	118.8	3.56	128.6	4.14	140.1	4.82	152.3	5.43	156.8	5.56	162.9	5.69	167.5	5.80
		21.2	118.8	3.49	128.6	4.07	140.1	4.74	152.3	5.34	156.8	5.47	162.9	5.60	167.5	5.71
		42.2	118.8	3.21	128.6	3.81	140.1	4.44	152.3	4.99	156.8	5.12	162.9	5.25	167.5	5.35
		52.8	118.8	3.12	128.6	3.73	140.1	4.34	152.3	4.90	156.8	5.02	162.9	5.15	167.5	5.21
	67	15.9	118.1	4.37	127.9	5.07	139.3	5.90	151.5	6.66	156.0	6.81	162.1	6.98	166.6	7.10
		21.2	118.1	4.28	127.9	4.99	139.3	5.81	151.5	6.55	156.0	6.70	162.1	6.87	166.6	6.99
		42.2	118.1	3.94	127.9	4.67	139.3	5.44	151.5	6.12	156.0	6.27	162.1	6.43	166.6	6.55
		52.8	118.1	3.83	127.9	4.57	139.3	5.32	151.5	6.00	156.0	6.15	162.1	6.31	166.6	6.39
	75	15.9	118.1	5.35	127.9	6.21	139.3	7.24	151.5	8.15	156.0	8.34	162.1	8.54	166.6	8.70
		21.2	118.1	5.24	127.9	6.11	139.3	7.12	151.5	8.02	156.0	8.21	162.1	8.41	166.6	8.56
		42.2	118.1	4.82	127.9	5.71	139.3	6.66	151.5	7.50	156.0	7.68	162.1	7.88	166.6	8.02
		52.8	118.1	4.69	127.9	5.59	139.3	6.52	151.5	7.35	156.0	7.53	162.1	7.73	166.6	7.82
	85	15.9	118.1	6.52	127.9	7.57	139.3	8.82	151.5	9.93	156.0	10.17	162.1	10.41	166.6	10.61
		21.2	118.1	6.39	127.9	7.45	139.3	8.68	151.5	9.77	156.0	10.01	162.1	10.25	166.6	10.44
		42.2	118.1	5.87	127.9	6.97	139.3	8.11	151.5	9.14	156.0	9.36	162.1	9.60	166.6	9.78
		52.8	118.1	5.71	127.9	6.82	139.3	7.95	151.5	8.96	156.0	9.18	162.1	9.42	166.6	9.54
	95	15.9	110.1	6.77	119.2	7.88	129.8	9.17	141.1	10.33	145.3	10.57	151.0	10.83	155.2	11.02
		21.2	110.1	6.64	119.2	7.75	129.8	9.02	141.1	10.16	145.3	10.40	151.0	10.66	155.2	10.85
		42.2	110.1	6.11	119.2	7.24	129.8	8.44	141.1	9.50	145.3	9.73	151.0	9.98	155.2	10.17
		52.8	110.1	5.94	119.2	7.09	129.8	8.26	141.1	9.31	145.3	9.55	151.0	9.79	155.2	9.92
	104	15.9	102.0	7.45	110.5	8.65	120.3	10.07	130.8	11.34	134.7	11.62	139.9	11.90	143.8	12.11
		21.2	102.0	7.30	110.5	8.51	120.3	9.91	130.8	11.16	134.7	11.43	139.9	11.71	143.8	11.92
		42.2	102.0	6.71	110.5	7.96	120.3	9.27	130.8	10.44	134.7	10.69	139.9	10.97	143.8	11.17
		52.8	102.0	6.52	110.5	7.79	120.3	9.08	130.8	10.23	134.7	10.49	139.9	10.76	143.8	10.89
	113	15.9	93.9	8.12	101.8	9.42	110.8	10.98	120.5	12.36	124.1	12.66	128.8	12.96	132.4	13.20
		21.2	93.9	7.96	101.8	9.27	110.8	10.80	120.5	12.16	124.1	12.46	128.8	12.76	132.4	12.99
		42.2	93.9	7.31	101.8	8.68	110.8	10.10	120.5	11.38	124.1	11.65	128.8	11.96	132.4	12.17
		52.8	93.9	7.10	101.8	8.49	110.8	9.90	120.5	11.15	124.1	11.43	128.8	11.73	132.4	11.86
100	50	15.9	112.3	2.51	121.6	2.91	132.5	3.40	144.0	3.83	148.3	3.91	154.1	4.01	158.4	4.07
		21.2	112.3	2.46	121.6	2.87	132.5	3.34	144.0	3.76	148.3	3.85	154.1	3.95	158.4	4.00
		42.2	112.3	2.26	121.6	2.69	132.5	3.11	144.0	3.51	148.3	3.59	154.1	3.67	158.4	3.74
		52.8	112.3	2.18	121.6	2.62	132.5	3.06	144.0	3.43	148.3	3.53	154.1	3.61	158.4	3.65
	59	15.9	112.3	3.40	121.6	3.94	132.5	4.60	144.0	5.17	148.3	5.30	154.1	5.43	158.4	5.52
		21.2	112.3	3.33	121.6	3.88	132.5	4.52	144.0	5.09	148.3	5.21	154.1	5.34	158.4	5.43
		42.2	112.3	3.06	121.6	3.63	132.5	4.22	144.0	4.76	148.3	4.87	154.1	4.99	158.4	5.08
		52.8	112.3	2.97	121.6	3.55	132.5	4.14	144.0	4.66	148.3	4.78	154.1	4.90	158.4	4.95
	67	15.9	112.3	4.18	121.6	4.86	132.5	5.66	144.0	6.37	148.3	6.52	154.1	6.69	158.4	6.81
		21.2	112.3	4.10	121.6	4.78	132.5	5.57	144.0	6.27	148.3	6.42	154.1	6.58	158.4	6.70
		42.2	112.3	3.77	121.6	4.47	132.5	5.21	144.0	5.87	148.3	6.01	154.1	6.16	158.4	6.27
		52.8	112.3	3.67	121.6	4.38	132.5	5.10	144.0	5.75	148.3	5.89	154.1	6.05	158.4	6.11
	75	15.9	112.3	5.10	121.6	5.93	132.5	6.91	144.0	7.78	148.3	7.96	154.1	8.16	158.4	8.30
		21.2	112.3	5.00	121.6	5.83	132.5	6.80	144.0	7.65	148.3	7.83	154.1	8.03	158.4	8.17
		42.2	112.3	4.60	121.6	5.45	132.5	6.35	144.0	7.15	148.3	7.33	154.1	7.51	158.4	7.65
		52.8	112.3	4.47	121.6	5.34	132.5	6.22	144.0	7.01	148.3	7.19	154.1	7.37	158.4	7.45
	85	15.9	112.3	6.27	121.6	7.30	132.5	8.50	144.0	9.56	148.3	9.80	154.1	10.03	158.4	10.21
		21.2	112.3	6.15	121.6	7.18	132.5	8.36	144.0	9.41	148.3	9.64	154.1	9.87	158.4	10.05
		42.2	112.3	5.66	121.6	6.71	132.5	7.81	144.0	8.80	148.3	9.01	154.1	9.24	158.4	9.41
		52.8	112.3	5.50	121.6	6.57	132.5	7.65	144.0	8.63	148.3	8.84	154.1	9.07	158.4	9.16
	95	15.9	106.7	6.62	115.6	7.69	125.9	8.96	136.8	10.09	140.9	10.34	146.4	10.59	150.5	10.78
		21.2	106.7	6.49	115.6	7.57	125.9	8.82	136.8	9.93	140.9	10.17	146.4	10.42	150.5	10.61
		42.2	106.7	5.97	115.6	7.08	125.9	8.25	136.8	9.29	140.9	9.51	146.4	9.75	150.5	9.93
		52.8	106.7	5.81	115.6	6.93	125.9	8.08	136.8	9.11	140.9	9.33	146.4	9.57	150.5	9.67
	104	15.9	101.1	7.43	109.5	8.64	119.2	10.06	129.6	11.33	133.5	11.60	138.7	11.88	142.6	12.09
		21.2	101.1	7.28	109.5	8.50	119.2	9.90	129.6	11.15	133.5	11.41	138.7	11.69	142.6	11.90
		42.2	101.1	6.70	109.5	7.94	119.2	9.25	129.6	10.42	133.5	10.67	138.7	10.94	142.6	11.14
		52.8	101.1	6.51	109.5	7.77	119.2	9.06	129.6	10.22	133.5	10.47	138.7	10.74	142.6	10.85
	113	15.9	95.5	8.23	103.4	9.59	112.5	11.16	122.4	12.58	126.1	12.86	131.0	13.17	134.7	13.40
		21.2	95.5	8.07	103.4	9.43	112.5	10.98	122.4	12.37	126.1	12.65	131.0	12.96	134.7	13.19
		42.2	95.5	7.43	103.4	8.80	112.5	10.25	122.4	11.55	126.1	11.83	131.0	12.13	134.7	12.35
		52.8	95.5	7.21	103.4	8.61	112.5	10.04	122.4	11.33	126.1	11.61	131.0	11.91	134.7	12.03

TC = Total Cooling Capacity (MBh).
PI = Power input (KW).
Power input (KW) includes compressor(s) and controls.
Test condition based on 25 feet of equivalent refrigerant piping and no change in elevation between indoor unit and water source unit.

Due to our policy of continuous product innovation, some specifications may change without notification.
©LG Electronics U.S.A., Inc., Englewood Cliffs, NJ. All rights reserved. "LG" is a registered trademark of LG Corp.

Cooling Capacity—ARWB144BA2 / ARWN144BA2 (208/230 Volt)

Table 20c: Cooling Capacity ARWB144BA2 / ARWN144BA2

Combination Ratio (%) (Capacity index)	Inlet Water Temperature (°F)	Water Flow Rate (gpm)	Indoor Unit Entering Air Wet Bulb Temperature °F													
			57		61		64		67		70		73		76	
			TC MBh	PI kW	TC MBh	PI kW	TC MBh	PI kW	TC MBh	PI kW	TC MBh	PI kW	TC MBh	PI kW	TC MBh	PI kW
90	50	15.9	101.1	2.15	109.5	2.50	119.2	2.91	129.6	3.29	133.5	3.35	138.7	3.43	142.6	3.51
		21.2	101.1	2.11	109.5	2.46	119.2	2.87	129.6	3.23	133.5	3.30	138.7	3.38	142.6	3.45
		42.2	101.1	1.93	109.5	2.30	119.2	2.70	129.6	3.01	133.5	3.09	138.7	3.18	142.6	3.23
		52.8	101.1	1.89	109.5	2.24	119.2	2.63	129.6	2.95	133.5	3.03	138.7	3.12	142.6	3.14
	59	15.9	101.1	2.92	109.5	3.40	119.2	3.95	129.6	4.45	133.5	4.55	138.7	4.66	142.6	4.76
		21.2	101.1	2.86	109.5	3.34	119.2	3.89	129.6	4.38	133.5	4.48	138.7	4.59	142.6	4.68
		42.2	101.1	2.63	109.5	3.12	119.2	3.64	129.6	4.09	133.5	4.19	138.7	4.30	142.6	4.38
		52.8	101.1	2.56	109.5	3.05	119.2	3.56	129.6	4.01	133.5	4.11	138.7	4.22	142.6	4.26
	67	15.9	101.1	3.60	109.5	4.19	119.2	4.88	129.6	5.49	133.5	5.62	138.7	5.76	142.6	5.86
		21.2	101.1	3.53	109.5	4.12	119.2	4.80	129.6	5.40	133.5	5.53	138.7	5.67	142.6	5.77
		42.2	101.1	3.25	109.5	3.85	119.2	4.48	129.6	5.05	133.5	5.17	138.7	5.30	142.6	5.40
		52.8	101.1	3.16	109.5	3.77	119.2	4.39	129.6	4.95	133.5	5.07	138.7	5.20	142.6	5.26
	75	15.9	101.1	4.39	109.5	5.10	119.2	5.95	129.6	6.70	133.5	6.85	138.7	7.02	142.6	7.14
		21.2	101.1	4.30	109.5	5.02	119.2	5.85	129.6	6.59	133.5	6.74	138.7	6.91	142.6	7.03
		42.2	101.1	3.96	109.5	4.69	119.2	5.47	129.6	6.16	133.5	6.31	138.7	6.47	142.6	6.58
		52.8	101.1	3.85	109.5	4.59	119.2	5.36	129.6	6.04	133.5	6.19	138.7	6.35	142.6	6.41
	85	15.9	101.1	5.40	109.5	6.28	119.2	7.31	129.6	8.23	133.5	8.42	138.7	8.64	142.6	8.79
		21.2	101.1	5.29	109.5	6.18	119.2	7.19	129.6	8.10	133.5	8.29	138.7	8.50	142.6	8.65
		42.2	101.1	4.87	109.5	5.77	119.2	6.73	129.6	7.57	133.5	7.76	138.7	7.95	142.6	8.10
		52.8	101.1	4.74	109.5	5.65	119.2	6.59	129.6	7.43	133.5	7.61	138.7	7.81	142.6	7.88
	95	15.9	98.3	5.83	106.4	6.77	115.9	7.89	126.0	8.88	129.8	9.10	134.8	9.32	138.6	9.48
		21.2	98.3	5.71	106.4	6.66	115.9	7.76	126.0	8.74	129.8	8.95	134.8	9.17	138.6	9.33
		42.2	98.3	5.25	106.4	6.23	115.9	7.26	126.0	8.17	129.8	8.37	134.8	8.58	138.6	8.74
		52.8	98.3	5.11	106.4	6.10	115.9	7.11	126.0	8.01	129.8	8.21	134.8	8.42	138.6	8.51
	104	15.9	95.5	6.69	103.4	7.77	112.6	9.07	122.4	10.20	126.1	10.45	131.0	10.70	134.6	10.89
		21.2	95.5	6.56	103.4	7.65	112.6	8.92	122.4	10.04	126.1	10.28	131.0	10.53	134.6	10.72
		42.2	95.5	6.04	103.4	7.16	112.6	8.34	122.4	9.39	126.1	9.61	131.0	9.86	134.6	10.04
		52.8	95.5	5.87	103.4	7.00	112.6	8.17	122.4	9.20	126.1	9.43	131.0	9.67	134.6	9.77
	113	15.9	92.7	7.56	100.4	8.78	109.3	10.25	118.8	11.52	122.4	11.80	127.2	12.08	130.6	12.30
		21.2	92.7	7.41	100.4	8.64	109.3	10.08	118.8	11.34	122.4	11.61	127.2	11.89	130.6	12.11
		42.2	92.7	6.83	100.4	8.09	109.3	9.42	118.8	10.61	122.4	10.85	127.2	11.14	130.6	11.34
		52.8	92.7	6.63	100.4	7.90	109.3	9.23	118.8	10.39	122.4	10.65	127.2	10.92	130.6	11.03
80	50	15.9	89.9	1.80	97.3	2.10	106.0	2.44	115.2	2.75	118.7	2.82	123.3	2.89	126.7	2.93
		21.2	89.9	1.77	97.3	2.07	106.0	2.41	115.2	2.70	118.7	2.77	123.3	2.84	126.7	2.89
		42.2	89.9	1.64	97.3	1.93	106.0	2.25	115.2	2.53	118.7	2.59	123.3	2.64	126.7	2.70
		52.8	89.9	1.59	97.3	1.89	106.0	2.21	115.2	2.49	118.7	2.55	123.3	2.62	126.7	2.63
	59	15.9	89.9	2.45	97.3	2.85	106.0	3.31	115.2	3.73	118.7	3.82	123.3	3.91	126.7	3.98
		21.2	89.9	2.40	97.3	2.80	106.0	3.26	115.2	3.67	118.7	3.76	123.3	3.85	126.7	3.92
		42.2	89.9	2.21	97.3	2.62	106.0	3.05	115.2	3.43	118.7	3.51	123.3	3.60	126.7	3.67
		52.8	89.9	2.15	97.3	2.56	106.0	2.99	115.2	3.37	118.7	3.45	123.3	3.54	126.7	3.57
	67	15.9	89.9	3.02	97.3	3.51	106.0	4.09	115.2	4.61	118.7	4.72	123.3	4.83	126.7	4.92
		21.2	89.9	2.96	97.3	3.45	106.0	4.02	115.2	4.53	118.7	4.64	123.3	4.75	126.7	4.84
		42.2	89.9	2.72	97.3	3.23	106.0	3.76	115.2	4.23	118.7	4.33	123.3	4.45	126.7	4.53
		52.8	89.9	2.65	97.3	3.16	106.0	3.68	115.2	4.15	118.7	4.25	123.3	4.36	126.7	4.41
	75	15.9	89.9	3.68	97.3	4.28	106.0	4.98	115.2	5.61	118.7	5.74	123.3	5.88	126.7	6.00
		21.2	89.9	3.61	97.3	4.21	106.0	4.90	115.2	5.52	118.7	5.65	123.3	5.79	126.7	5.90
		42.2	89.9	3.32	97.3	3.94	106.0	4.58	115.2	5.16	118.7	5.29	123.3	5.42	126.7	5.52
		52.8	89.9	3.23	97.3	3.85	106.0	4.49	115.2	5.06	118.7	5.19	123.3	5.32	126.7	5.37
	85	15.9	89.9	4.53	97.3	5.27	106.0	6.13	115.2	6.90	118.7	7.06	123.3	7.23	126.7	7.37
		21.2	89.9	4.44	97.3	5.18	106.0	6.03	115.2	6.79	118.7	6.95	123.3	7.12	126.7	7.25
		42.2	89.9	4.08	97.3	4.84	106.0	5.64	115.2	6.35	118.7	6.50	123.3	6.67	126.7	6.79
		52.8	89.9	3.97	97.3	4.74	106.0	5.52	115.2	6.23	118.7	6.38	123.3	6.54	126.7	6.61
	95	15.9	89.9	5.03	97.3	5.84	106.0	6.81	115.2	7.67	118.7	7.86	123.3	8.05	126.7	8.19
		21.2	89.9	4.93	97.3	5.75	106.0	6.70	115.2	7.55	118.7	7.73	123.3	7.92	126.7	8.06
		42.2	89.9	4.54	97.3	5.38	106.0	6.27	115.2	7.06	118.7	7.22	123.3	7.41	126.7	7.54
		52.8	89.9	4.41	97.3	5.26	106.0	6.14	115.2	6.92	118.7	7.09	123.3	7.27	126.7	7.34
	104	15.9	89.9	5.96	97.3	6.92	106.0	8.07	115.2	9.09	118.7	9.30	123.3	9.52	126.7	9.69
		21.2	89.9	5.84	97.3	6.81	106.0	7.94	115.2	8.94	118.7	9.15	123.3	9.37	126.7	9.54
		42.2	89.9	5.37	97.3	6.37	106.0	7.42	115.2	8.36	118.7	8.55	123.3	8.77	126.7	8.93
		52.8	89.9	5.22	97.3	6.23	106.0	7.27	115.2	8.19	118.7	8.39	123.3	8.61	126.7	8.70
	113	15.9	89.9	6.89	97.3	8.00	106.0	9.33	115.2	10.50	118.7	10.74	123.3	10.99	126.7	11.20
		21.2	89.9	6.75	97.3	7.87	106.0	9.18	115.2	10.33	118.7	10.57	123.3	10.82	126.7	11.02
		42.2	89.9	6.20	97.3	7.36	106.0	8.57	115.2	9.66	118.7	9.88	123.3	10.13	126.7	10.32
		52.8	89.9	6.03	97.3	7.20	106.0	8.40	115.2	9.46	118.7	9.69	123.3	9.95	126.7	10.06

TC = Total Cooling Capacity (MBh).
PI = Power input (KW).
Power input (KW) includes compressor(s) and controls.
Test condition based on 25 feet of equivalent refrigerant piping and no change in elevation between indoor unit and water source unit.

LG

Due to our policy of continuous product innovation, some specifications may change without notification.
©LG Electronics U.S.A., Inc., Englewood Cliffs, NJ. All rights reserved. "LG" is a registered trademark of LG Corp.

PERFORMANCE DATA

Cooling Capacity—ARWB144BA2 / ARWN144BA2 (208/230 Volt)

Table 20d: Cooling Capacity ARWB144BA2 / ARWN144BA2

Combination Ratio (%) (Capacity index)	Inlet Water Temperature (°F)	Water Flow Rate (gpm)	Indoor Unit Entering Air Wet Bulb Temperature °F													
			57		61		64		67		70		73		76	
			TC MBh	PI kW	TC MBh	PI kW	TC MBh	PI kW	TC MBh	PI kW	TC MBh	PI kW	TC MBh	PI kW	TC MBh	PI kW
70	50	15.9	78.6	1.49	85.1	1.75	92.7	2.04	100.8	2.29	103.8	2.34	107.9	2.39	110.9	2.44
		21.2	78.6	1.46	85.1	1.72	92.7	2.00	100.8	2.25	103.8	2.30	107.9	2.36	110.9	2.41
		42.2	78.6	1.35	85.1	1.62	92.7	1.86	100.8	2.10	103.8	2.16	107.9	2.21	110.9	2.25
		52.8	78.6	1.31	85.1	1.57	92.7	1.83	100.8	2.07	103.8	2.12	107.9	2.16	110.9	2.19
	59	15.9	78.6	2.03	85.1	2.37	92.7	2.76	100.8	3.10	103.8	3.17	107.9	3.25	110.9	3.31
		21.2	78.6	1.99	85.1	2.33	92.7	2.71	100.8	3.05	103.8	3.12	107.9	3.20	110.9	3.26
		42.2	78.6	1.83	85.1	2.18	92.7	2.53	100.8	2.85	103.8	2.92	107.9	3.00	110.9	3.05
		52.8	78.6	1.78	85.1	2.13	92.7	2.48	100.8	2.80	103.8	2.87	107.9	2.94	110.9	2.97
	67	15.9	78.6	2.51	85.1	2.92	92.7	3.39	100.8	3.82	103.8	3.91	107.9	4.01	110.9	4.09
		21.2	78.6	2.46	85.1	2.87	92.7	3.34	100.8	3.76	103.8	3.85	107.9	3.95	110.9	4.02
		42.2	78.6	2.26	85.1	2.68	92.7	3.13	100.8	3.52	103.8	3.60	107.9	3.70	110.9	3.76
		52.8	78.6	2.20	85.1	2.63	92.7	3.06	100.8	3.45	103.8	3.54	107.9	3.63	110.9	3.66
	75	15.9	78.6	3.06	85.1	3.56	92.7	4.15	100.8	4.67	103.8	4.78	107.9	4.90	110.9	4.98
		21.2	78.6	3.00	85.1	3.50	92.7	4.08	100.8	4.59	103.8	4.70	107.9	4.82	110.9	4.90
		42.2	78.6	2.76	85.1	3.27	92.7	3.81	100.8	4.29	103.8	4.39	107.9	4.51	110.9	4.59
		52.8	78.6	2.68	85.1	3.20	92.7	3.73	100.8	4.21	103.8	4.31	107.9	4.42	110.9	4.47
	85	15.9	78.6	3.77	85.1	4.37	92.7	5.09	100.8	5.74	103.8	5.87	107.9	6.02	110.9	6.13
		21.2	78.6	3.69	85.1	4.30	92.7	5.01	100.8	5.65	103.8	5.78	107.9	5.92	110.9	6.03
		42.2	78.6	3.39	85.1	4.02	92.7	4.69	100.8	5.28	103.8	5.41	107.9	5.54	110.9	5.64
		52.8	78.6	3.30	85.1	3.94	92.7	4.59	100.8	5.18	103.8	5.30	107.9	5.44	110.9	5.50
	95	15.9	78.6	4.18	85.1	4.86	92.7	5.66	100.8	6.37	103.8	6.52	107.9	6.69	110.9	6.81
		21.2	78.6	4.10	85.1	4.78	92.7	5.57	100.8	6.27	103.8	6.42	107.9	6.58	110.9	6.70
		42.2	78.6	3.77	85.1	4.47	92.7	5.21	100.8	5.87	103.8	6.01	107.9	6.16	110.9	6.27
		52.8	78.6	3.67	85.1	4.38	92.7	5.10	100.8	5.75	103.8	5.89	107.9	6.04	110.9	6.11
	104	15.9	78.6	4.96	85.1	5.75	92.7	6.71	100.8	7.55	103.8	7.74	107.9	7.92	110.9	8.06
		21.2	78.6	4.86	85.1	5.66	92.7	6.60	100.8	7.43	103.8	7.61	107.9	7.79	110.9	7.93
		42.2	78.6	4.47	85.1	5.30	92.7	6.17	100.8	6.95	103.8	7.11	107.9	7.29	110.9	7.43
		52.8	78.6	4.34	85.1	5.18	92.7	6.04	100.8	6.81	103.8	6.98	107.9	7.16	110.9	7.23
	113	15.9	78.6	5.73	85.1	6.64	92.7	7.76	100.8	8.73	103.8	8.95	107.9	9.15	110.9	9.30
		21.2	78.6	5.62	85.1	6.54	92.7	7.63	100.8	8.59	103.8	8.80	107.9	9.00	110.9	9.16
		42.2	78.6	5.17	85.1	6.13	92.7	7.13	100.8	8.03	103.8	8.21	107.9	8.42	110.9	8.59
		52.8	78.6	5.01	85.1	5.98	92.7	6.98	100.8	7.87	103.8	8.07	107.9	8.28	110.9	8.35
60	50	15.9	67.4	1.20	73.0	1.38	79.5	1.62	86.4	1.82	89.0	1.87	92.4	1.90	95.0	1.96
		21.2	67.4	1.17	73.0	1.36	79.5	1.60	86.4	1.79	89.0	1.84	92.4	1.88	95.0	1.93
		42.2	67.4	1.08	73.0	1.27	79.5	1.49	86.4	1.66	89.0	1.72	92.4	1.76	95.0	1.79
		52.8	67.4	1.05	73.0	1.26	79.5	1.46	86.4	1.65	89.0	1.69	92.4	1.72	95.0	1.75
	59	15.9	67.4	1.62	73.0	1.88	79.5	2.20	86.4	2.47	89.0	2.53	92.4	2.59	95.0	2.64
		21.2	67.4	1.59	73.0	1.85	79.5	2.16	86.4	2.43	89.0	2.49	92.4	2.55	95.0	2.60
		42.2	67.4	1.46	73.0	1.73	79.5	2.02	86.4	2.27	89.0	2.33	92.4	2.39	95.0	2.43
		52.8	67.4	1.42	73.0	1.70	79.5	1.98	86.4	2.23	89.0	2.29	92.4	2.34	95.0	2.37
	67	15.9	67.4	2.00	73.0	2.33	79.5	2.70	86.4	3.05	89.0	3.12	92.4	3.20	95.0	3.25
		21.2	67.4	1.96	73.0	2.29	79.5	2.66	86.4	3.00	89.0	3.07	92.4	3.15	95.0	3.20
		42.2	67.4	1.80	73.0	2.14	79.5	2.49	86.4	2.81	89.0	2.87	92.4	2.95	95.0	3.00
		52.8	67.4	1.75	73.0	2.09	79.5	2.44	86.4	2.75	89.0	2.82	92.4	2.89	95.0	2.92
	75	15.9	67.4	2.44	73.0	2.84	79.5	3.30	86.4	3.72	89.0	3.81	92.4	3.90	95.0	3.97
		21.2	67.4	2.39	73.0	2.79	79.5	3.25	86.4	3.66	89.0	3.75	92.4	3.84	95.0	3.91
		42.2	67.4	2.20	73.0	2.61	79.5	3.04	86.4	3.42	89.0	3.50	92.4	3.59	95.0	3.66
		52.8	67.4	2.14	73.0	2.55	79.5	2.98	86.4	3.35	89.0	3.44	92.4	3.53	95.0	3.56
	85	15.9	67.4	3.00	73.0	3.49	79.5	4.07	86.4	4.57	89.0	4.69	92.4	4.80	95.0	4.89
		21.2	67.4	2.94	73.0	3.43	79.5	4.00	86.4	4.50	89.0	4.61	92.4	4.72	95.0	4.81
		42.2	67.4	2.71	73.0	3.21	79.5	3.74	86.4	4.21	89.0	4.31	92.4	4.42	95.0	4.50
		52.8	67.4	2.63	73.0	3.14	79.5	3.66	86.4	4.13	89.0	4.23	92.4	4.34	95.0	4.38
	95	15.9	67.4	3.34	73.0	3.87	79.5	4.51	86.4	5.08	89.0	5.20	92.4	5.34	95.0	5.43
		21.2	67.4	3.27	73.0	3.81	79.5	4.44	86.4	5.00	89.0	5.12	92.4	5.25	95.0	5.34
		42.2	67.4	3.01	73.0	3.56	79.5	4.15	86.4	4.68	89.0	4.79	92.4	4.91	95.0	5.00
		52.8	67.4	2.92	73.0	3.49	79.5	4.07	86.4	4.58	89.0	4.70	92.4	4.82	95.0	4.87
	104	15.9	67.4	3.95	73.0	4.60	79.5	5.35	86.4	6.02	89.0	6.16	92.4	6.31	95.0	6.43
		21.2	67.4	3.87	73.0	4.52	79.5	5.26	86.4	5.92	89.0	6.06	92.4	6.21	95.0	6.33
		42.2	67.4	3.56	73.0	4.22	79.5	4.92	86.4	5.54	89.0	5.67	92.4	5.81	95.0	5.92
		52.8	67.4	3.46	73.0	4.13	79.5	4.82	86.4	5.43	89.0	5.56	92.4	5.71	95.0	5.76
	113	15.9	67.4	4.56	73.0	5.32	79.5	6.18	86.4	6.95	89.0	7.11	92.4	7.29	95.0	7.44
		21.2	67.4	4.47	73.0	5.23	79.5	6.08	86.4	6.84	89.0	7.00	92.4	7.17	95.0	7.32
		42.2	67.4	4.11	73.0	4.88	79.5	5.69	86.4	6.40	89.0	6.55	92.4	6.71	95.0	6.84
		52.8	67.4	4.00	73.0	4.77	79.5	5.57	86.4	6.28	89.0	6.42	92.4	6.60	95.0	6.65

TC = Total Cooling Capacity (MBh).
PI = Power input (KW).
Power input (KW) includes compressor(s) and controls.
Test condition based on 25 feet of equivalent refrigerant piping and no change in elevation between indoor unit and water source unit.

Due to our policy of continuous product innovation, some specifications may change without notification.
©LG Electronics U.S.A., Inc., Englewood Cliffs, NJ. All rights reserved. "LG" is a registered trademark of LG Corp.

PERFORMANCE DATA

Cooling Capacity—ARWB144BA2 / ARWN144BA2 (208/230 Volt)

Table 20e: Cooling Capacity ARWB144BA2 / ARWN144BA2

Combination Ratio (%) (Capacity index)	Inlet Water Temperature (°F)	Water Flow Rate (gpm)	Indoor Unit Entering Air Wet Bulb Temperature °F													
			57		61		64		67		70		73		76	
			TC	PI	TC	PI	TC	PI	TC	PI	TC	PI	TC	PI	TC	PI
			MBh	kW	MBh	kW	MBh	kW	MBh	kW	MBh	kW	MBh	kW	MBh	kW
50	50	15.9	56.2	0.91	60.8	1.02	66.2	1.20	72.0	1.34	74.2	1.40	77.0	1.42	79.2	1.46
		21.2	56.2	0.89	60.8	1.01	66.2	1.18	72.0	1.33	74.2	1.38	77.0	1.39	79.2	1.43
		42.2	56.2	0.81	60.8	0.95	66.2	1.12	72.0	1.26	74.2	1.29	77.0	1.31	79.2	1.33
		52.8	56.2	0.78	60.8	0.94	66.2	1.10	72.0	1.22	74.2	1.25	77.0	1.29	79.2	1.31
	59	15.9	56.2	1.22	60.8	1.40	66.2	1.64	72.0	1.84	74.2	1.89	77.0	1.93	79.2	1.97
		21.2	56.2	1.19	60.8	1.38	66.2	1.61	72.0	1.81	74.2	1.86	77.0	1.90	79.2	1.94
		42.2	56.2	1.09	60.8	1.29	66.2	1.51	72.0	1.70	74.2	1.74	77.0	1.78	79.2	1.81
		52.8	56.2	1.06	60.8	1.27	66.2	1.48	72.0	1.66	74.2	1.70	77.0	1.75	79.2	1.77
	67	15.9	56.2	1.49	60.8	1.74	66.2	2.02	72.0	2.28	74.2	2.33	77.0	2.39	79.2	2.43
		21.2	56.2	1.46	60.8	1.71	66.2	1.99	72.0	2.24	74.2	2.29	77.0	2.35	79.2	2.39
		42.2	56.2	1.34	60.8	1.59	66.2	1.86	72.0	2.09	74.2	2.14	77.0	2.20	79.2	2.24
		52.8	56.2	1.31	60.8	1.56	66.2	1.82	72.0	2.05	74.2	2.10	77.0	2.16	79.2	2.18
	75	15.9	56.2	1.82	60.8	2.12	66.2	2.46	72.0	2.78	74.2	2.84	77.0	2.91	79.2	2.96
		21.2	56.2	1.78	60.8	2.08	66.2	2.42	72.0	2.73	74.2	2.79	77.0	2.86	79.2	2.91
		42.2	56.2	1.64	60.8	1.94	66.2	2.27	72.0	2.55	74.2	2.61	77.0	2.68	79.2	2.73
		52.8	56.2	1.59	60.8	1.90	66.2	2.22	72.0	2.50	74.2	2.56	77.0	2.63	79.2	2.66
	85	15.9	56.2	2.23	60.8	2.60	66.2	3.03	72.0	3.42	74.2	3.50	77.0	3.58	79.2	3.64
		21.2	56.2	2.19	60.8	2.56	66.2	2.98	72.0	3.36	74.2	3.44	77.0	3.52	79.2	3.58
		42.2	56.2	2.02	60.8	2.39	66.2	2.79	72.0	3.14	74.2	3.21	77.0	3.30	79.2	3.35
		52.8	56.2	1.96	60.8	2.34	66.2	2.73	72.0	3.08	74.2	3.15	77.0	3.23	79.2	3.27
	95	15.9	56.2	2.49	60.8	2.89	66.2	3.36	72.0	3.79	74.2	3.88	77.0	3.97	79.2	4.04
		21.2	56.2	2.44	60.8	2.84	66.2	3.31	72.0	3.73	74.2	3.82	77.0	3.91	79.2	3.98
		42.2	56.2	2.24	60.8	2.66	66.2	3.10	72.0	3.49	74.2	3.57	77.0	3.66	79.2	3.73
		52.8	56.2	2.18	60.8	2.60	66.2	3.03	72.0	3.42	74.2	3.50	77.0	3.59	79.2	3.63
	104	15.9	56.2	2.95	60.8	3.43	66.2	3.98	72.0	4.49	74.2	4.59	77.0	4.70	79.2	4.80
		21.2	56.2	2.89	60.8	3.37	66.2	3.92	72.0	4.42	74.2	4.52	77.0	4.63	79.2	4.72
		42.2	56.2	2.65	60.8	3.15	66.2	3.67	72.0	4.13	74.2	4.23	77.0	4.34	79.2	4.41
		52.8	56.2	2.58	60.8	3.08	66.2	3.59	72.0	4.05	74.2	4.15	77.0	4.25	79.2	4.30
	113	15.9	56.2	3.41	60.8	3.97	66.2	4.60	72.0	5.20	74.2	5.30	77.0	5.43	79.2	5.55
		21.2	56.2	3.34	60.8	3.90	66.2	4.53	72.0	5.11	74.2	5.22	77.0	5.35	79.2	5.46
		42.2	56.2	3.06	60.8	3.64	66.2	4.24	72.0	4.77	74.2	4.89	77.0	5.02	79.2	5.09
		52.8	56.2	2.98	60.8	3.56	66.2	4.15	72.0	4.68	74.2	4.80	77.0	4.91	79.2	4.97

TC = Total Cooling Capacity (MBh).
PI = Power input (KW).
Power input (KW) includes compressor(s) and controls.
Test condition based on 25 feet of equivalent refrigerant piping and no change in elevation between indoor unit and water source unit.

Due to our policy of continuous product innovation, some specifications may change without notification.
©LG Electronics U.S.A., Inc., Englewood Cliffs, NJ. All rights reserved. "LG" is a registered trademark of LG Corp.

PERFORMANCE DATA

Cooling Capacity—ARWB216BA2 / ARWN216BA2 (208/230 Volt)

Table 21a: Cooling Capacity ARWB216BA2 / ARWN216BA2

Combination Ratio (%) (Capacity index)	Inlet Water Temperature (°F)	Water Flow Rate (gpm)	Indoor Unit Entering Air Wet Bulb Temperature °F													
			57		61		64		67		70		73		76	
			TC MBh	PI kW	TC MBh	PI kW	TC MBh	PI kW	TC MBh	PI kW	TC MBh	PI kW	TC MBh	PI kW	TC MBh	PI kW
130	50	23.8	200.8	4.47	217.4	5.17	236.8	6.01	257.4	6.80	265.1	6.96	275.3	7.13	283.0	7.24
		31.8	200.8	4.38	217.4	5.09	236.8	5.92	257.4	6.69	265.1	6.85	275.3	7.02	283.0	7.13
		63.3	200.8	4.03	217.4	4.78	236.8	5.56	257.4	6.25	265.1	6.41	275.3	6.57	283.0	6.72
		79.2	200.8	3.90	217.4	4.66	236.8	5.44	257.4	6.14	265.1	6.28	275.3	6.46	283.0	6.56
	59	23.8	197.5	5.86	213.9	6.80	233.0	7.92	253.2	8.92	260.8	9.14	270.9	9.36	278.5	9.51
		31.8	197.5	5.74	213.9	6.69	233.0	7.79	253.2	8.78	260.8	8.99	270.9	9.21	278.5	9.37
		63.3	197.5	5.28	213.9	6.26	233.0	7.29	253.2	8.21	260.8	8.41	270.9	8.63	278.5	8.81
		79.2	197.5	5.13	213.9	6.12	233.0	7.14	253.2	8.05	260.8	8.25	270.9	8.47	278.5	8.61
	67	23.8	194.6	7.09	210.8	8.24	229.6	9.61	249.5	10.81	257.0	11.07	267.0	11.34	274.5	11.53
		31.8	194.6	6.95	210.8	8.11	229.6	9.45	249.5	10.64	257.0	10.89	267.0	11.16	274.5	11.36
		63.3	194.6	6.39	210.8	7.58	229.6	8.83	249.5	9.95	257.0	10.19	267.0	10.46	274.5	10.67
		79.2	194.6	6.22	210.8	7.42	229.6	8.65	249.5	9.75	257.0	10.00	267.0	10.26	274.5	10.43
	75	23.8	194.6	8.74	210.8	10.16	229.6	11.84	249.5	13.33	257.0	13.65	267.0	13.97	274.5	14.22
		31.8	194.6	8.57	210.8	10.00	229.6	11.65	249.5	13.12	257.0	13.43	267.0	13.76	274.5	14.01
		63.3	194.6	7.89	210.8	9.35	229.6	10.89	249.5	12.27	257.0	12.57	267.0	12.91	274.5	13.16
		79.2	194.6	7.67	210.8	9.15	229.6	10.67	249.5	12.03	257.0	12.34	267.0	12.65	274.5	12.87
	85	23.8	194.6	10.50	210.8	12.20	229.6	14.21	249.5	16.00	257.0	16.38	267.0	16.78	274.5	17.07
		31.8	194.6	10.29	210.8	12.00	229.6	13.98	249.5	15.74	257.0	16.12	267.0	16.52	274.5	16.81
		63.3	194.6	9.46	210.8	11.22	229.6	13.07	249.5	14.72	257.0	15.09	267.0	15.49	274.5	15.80
		79.2	194.6	9.20	210.8	10.98	229.6	12.80	249.5	14.43	257.0	14.81	267.0	15.18	274.5	15.44
	95	23.8	175.2	10.62	189.7	12.34	206.6	14.37	224.6	16.18	231.3	16.56	240.3	16.96	247.0	17.26
		31.8	175.2	10.41	189.7	12.14	206.6	14.14	224.6	15.92	231.3	16.30	240.3	16.70	247.0	17.00
		63.3	175.2	9.57	189.7	11.35	206.6	13.22	224.6	14.89	231.3	15.26	240.3	15.66	247.0	15.97
		79.2	175.2	9.31	189.7	11.11	206.6	12.95	224.6	14.59	231.3	14.97	240.3	15.35	247.0	15.62
	104	23.8	155.7	11.20	168.6	13.01	183.7	15.16	199.6	17.07	205.6	17.47	213.6	17.90	219.6	18.20
		31.8	155.7	10.98	168.6	12.80	183.7	14.91	199.6	16.79	205.6	17.19	213.6	17.62	219.6	17.93
		63.3	155.7	10.09	168.6	11.97	183.7	13.94	199.6	15.70	205.6	16.09	213.6	16.52	219.6	16.85
		79.2	155.7	9.82	168.6	11.71	183.7	13.66	199.6	15.39	205.6	15.79	213.6	16.20	219.6	16.47
	113	23.8	136.2	11.79	147.5	13.68	160.8	15.94	174.6	17.95	179.9	18.37	186.9	18.83	192.2	19.15
		31.8	136.2	11.55	147.5	13.46	160.8	15.68	174.6	17.66	179.9	18.08	186.9	18.54	192.2	18.86
		63.3	136.2	10.61	147.5	12.59	160.8	14.66	174.6	16.51	179.9	16.92	186.9	17.38	192.2	17.73
		79.2	136.2	10.33	147.5	12.31	160.8	14.37	174.6	16.19	179.9	16.61	186.9	17.05	192.2	17.32
120	50	23.8	189.9	4.22	205.8	4.91	224.0	5.73	243.5	6.45	250.8	6.61	260.7	6.76	267.9	6.89
		31.8	189.9	4.14	205.8	4.83	224.0	5.64	243.5	6.34	250.8	6.50	260.7	6.65	267.9	6.78
		63.3	189.9	3.81	205.8	4.51	224.0	5.26	243.5	5.93	250.8	6.06	260.7	6.21	267.9	6.34
		79.2	189.9	3.71	205.8	4.42	224.0	5.15	243.5	5.81	250.8	5.94	260.7	6.10	267.9	6.21
	59	23.8	187.8	5.60	203.4	6.51	221.5	7.58	240.8	8.54	248.0	8.74	257.7	8.95	264.9	9.11
		31.8	187.8	5.49	203.4	6.40	221.5	7.46	240.8	8.40	248.0	8.60	257.7	8.81	264.9	8.97
		63.3	187.8	5.05	203.4	5.98	221.5	6.97	240.8	7.85	248.0	8.04	257.7	8.25	264.9	8.41
		79.2	187.8	4.91	203.4	5.86	221.5	6.83	240.8	7.70	248.0	7.89	257.7	8.09	264.9	8.22
	67	23.8	185.9	6.83	201.3	7.93	219.3	9.23	238.4	10.40	245.5	10.64	255.0	10.90	262.2	11.09
		31.8	185.9	6.69	201.3	7.80	219.3	9.08	238.4	10.23	245.5	10.47	255.0	10.73	262.2	10.92
		63.3	185.9	6.15	201.3	7.29	219.3	8.49	238.4	9.56	245.5	9.80	255.0	10.06	262.2	10.25
		79.2	185.9	5.98	201.3	7.14	219.3	8.32	238.4	9.38	245.5	9.62	255.0	9.86	262.2	10.01
	75	23.8	185.9	8.39	201.3	9.74	219.3	11.34	238.4	12.77	245.5	13.08	255.0	13.40	262.2	13.64
		31.8	185.9	8.22	201.3	9.58	219.3	11.16	238.4	12.57	245.5	12.87	255.0	13.19	262.2	13.43
		63.3	185.9	7.56	201.3	8.96	219.3	10.44	238.4	11.76	245.5	12.04	255.0	12.36	262.2	12.60
		79.2	185.9	7.35	201.3	8.77	219.3	10.22	238.4	11.52	245.5	11.82	255.0	12.12	262.2	12.30
	85	23.8	185.9	10.14	201.3	11.78	219.3	13.72	238.4	15.45	245.5	15.81	255.0	16.21	262.2	16.48
		31.8	185.9	9.94	201.3	11.59	219.3	13.50	238.4	15.20	245.5	15.56	255.0	15.95	262.2	16.23
		63.3	185.9	9.14	201.3	10.84	219.3	12.62	238.4	14.21	245.5	14.56	255.0	14.94	262.2	15.24
		79.2	185.9	8.89	201.3	10.60	219.3	12.36	238.4	13.93	245.5	14.29	255.0	14.66	262.2	14.87
	95	23.8	170.1	10.38	184.3	12.07	200.7	14.07	218.1	15.84	224.7	16.21	233.4	16.60	239.9	16.90
		31.8	170.1	10.18	184.3	11.88	200.7	13.84	218.1	15.58	224.7	15.95	233.4	16.34	239.9	16.64
		63.3	170.1	9.37	184.3	11.11	200.7	12.94	218.1	14.57	224.7	14.93	233.4	15.32	239.9	15.61
		79.2	170.1	9.11	184.3	10.87	200.7	12.67	218.1	14.28	224.7	14.65	233.4	15.02	239.9	15.24
	104	23.8	154.4	11.18	167.2	12.99	182.1	15.14	197.9	17.05	203.8	17.45	211.7	17.87	217.7	18.19
		31.8	154.4	10.96	167.2	12.78	182.1	14.89	197.9	16.77	203.8	17.17	211.7	17.59	217.7	17.91
		63.3	154.4	10.08	167.2	11.95	182.1	13.92	197.9	15.68	203.8	16.06	211.7	16.48	217.7	16.80
		79.2	154.4	9.80	167.2	11.70	182.1	13.64	197.9	15.37	203.8	15.76	211.7	16.17	217.7	16.40
	113	23.8	138.7	11.98	150.1	13.90	163.5	16.20	177.7	18.26	182.9	18.69	190.0	19.14	195.5	19.48
		31.8	138.7	11.74	150.1	13.68	163.5	15.94	177.7	17.96	182.9	18.39	190.0	18.84	195.5	19.18
		63.3	138.7	10.79	150.1	12.79	163.5	14.90	177.7	16.79	182.9	17.19	190.0	17.64	195.5	17.99
		79.2	138.7	10.49	150.1	12.53	163.5	14.61	177.7	16.46	182.9	16.87	190.0	17.32	195.5	17.56

TC = Total Cooling Capacity (MBh).
PI = Power input (KW).
Power input (KW) includes compressor(s) and controls.
Test condition based on 25 feet of equivalent refrigerant piping and no change in elevation between indoor unit and water source unit.

Due to our policy of continuous product innovation, some specifications may change without notification.
©LG Electronics U.S.A., Inc., Englewood Cliffs, NJ. All rights reserved. "LG" is a registered trademark of LG Corp.

Table 21b: Cooling Capacity ARWB216BA2 / ARWN216BA2

Combination Ratio (%) (Capacity index)	Inlet Water Temperature (°F)	Water Flow Rate (gpm)	Indoor Unit Entering Air Wet Bulb Temperature °F													
			57		61		64		67		70		73		76	
			TC	PI	TC	PI	TC	PI	TC	PI	TC	PI	TC	PI	TC	PI
			MBh	kW	MBh	kW	MBh	kW	MBh	kW	MBh	kW	MBh	kW	MBh	kW
110	50	23.8	179.3	3.99	194.0	4.63	211.3	5.41	229.8	6.07	236.8	6.22	245.9	6.39	252.7	6.49
		31.8	179.3	3.91	194.0	4.56	211.3	5.32	229.8	5.97	236.8	6.12	245.9	6.28	252.7	6.39
		63.3	179.3	3.61	194.0	4.26	211.3	4.96	229.8	5.59	236.8	5.72	245.9	5.87	252.7	5.98
		79.2	179.3	3.49	194.0	4.17	211.3	4.87	229.8	5.49	236.8	5.62	245.9	5.75	252.7	5.84
	59	23.8	178.2	5.35	192.9	6.21	210.1	7.24	228.4	8.14	235.3	8.33	244.4	8.55	251.2	8.70
		31.8	178.2	5.24	192.9	6.11	210.1	7.12	228.4	8.01	235.3	8.20	244.4	8.41	251.2	8.56
		63.3	178.2	4.82	192.9	5.71	210.1	6.65	228.4	7.49	235.3	7.67	244.4	7.87	251.2	8.02
		79.2	178.2	4.68	192.9	5.59	210.1	6.52	228.4	7.35	235.3	7.53	244.4	7.72	251.2	7.82
	67	23.8	177.2	6.55	191.9	7.61	209.0	8.86	227.2	9.98	234.0	10.21	243.1	10.46	249.9	10.66
		31.8	177.2	6.42	191.9	7.49	209.0	8.72	227.2	9.82	234.0	10.05	243.1	10.30	249.9	10.49
		63.3	177.2	5.90	191.9	7.00	209.0	8.15	227.2	9.18	234.0	9.40	243.1	9.65	249.9	9.83
		79.2	177.2	5.74	191.9	6.85	209.0	7.99	227.2	9.00	234.0	9.23	243.1	9.47	249.9	9.58
	75	23.8	177.2	8.02	191.9	9.32	209.0	10.86	227.2	12.22	234.0	12.51	243.1	12.81	249.9	13.04
		31.8	177.2	7.86	191.9	9.17	209.0	10.68	227.2	12.02	234.0	12.31	243.1	12.61	249.9	12.84
		63.3	177.2	7.23	191.9	8.57	209.0	9.98	227.2	11.24	234.0	11.52	243.1	11.81	249.9	12.04
		79.2	177.2	7.03	191.9	8.39	209.0	9.78	227.2	11.02	234.0	11.30	243.1	11.59	249.9	11.74
	85	23.8	177.2	9.77	191.9	11.36	209.0	13.23	227.2	14.90	234.0	15.26	243.1	15.63	249.9	15.91
		31.8	177.2	9.58	191.9	11.18	209.0	13.02	227.2	14.66	234.0	15.01	243.1	15.38	249.9	15.66
		63.3	177.2	8.81	191.9	10.45	209.0	12.17	227.2	13.71	234.0	14.04	243.1	14.40	249.9	14.67
		79.2	177.2	8.57	191.9	10.23	209.0	11.92	227.2	13.44	234.0	13.78	243.1	14.13	249.9	14.31
	95	23.8	165.1	10.16	178.8	11.81	194.7	13.75	211.7	15.49	218.0	15.87	226.5	16.25	232.8	16.54
		31.8	165.1	9.96	178.8	11.62	194.7	13.53	211.7	15.24	218.0	15.61	226.5	15.99	232.8	16.28
		63.3	165.1	9.16	178.8	10.86	194.7	12.66	211.7	14.25	218.0	14.60	226.5	14.97	232.8	15.25
		79.2	165.1	8.91	178.8	10.63	194.7	12.39	211.7	13.97	218.0	14.32	226.5	14.69	232.8	14.87
	104	23.8	153.0	11.16	165.7	12.97	180.5	15.12	196.1	17.02	202.0	17.42	209.9	17.84	215.8	18.16
		31.8	153.0	10.94	165.7	12.76	180.5	14.87	196.1	16.74	202.0	17.14	209.9	17.56	215.8	17.88
		63.3	153.0	10.06	165.7	11.93	180.5	13.90	196.1	15.65	202.0	16.03	209.9	16.45	215.8	16.76
		79.2	153.0	9.79	165.7	11.68	180.5	13.62	196.1	15.35	202.0	15.73	209.9	16.14	215.8	16.34
	113	23.8	140.9	12.16	152.6	14.13	166.3	16.48	180.5	18.54	186.0	18.98	193.3	19.43	198.8	19.79
		31.8	140.9	11.92	152.6	13.90	166.3	16.21	180.5	18.24	186.0	18.67	193.3	19.13	198.8	19.48
		63.3	140.9	10.96	152.6	13.00	166.3	15.14	180.5	17.05	186.0	17.46	193.3	17.93	198.8	18.27
		79.2	140.9	10.67	152.6	12.73	166.3	14.85	180.5	16.73	186.0	17.14	193.3	17.59	198.8	17.81
100	50	23.8	168.5	3.76	182.5	4.36	198.7	5.08	216.0	5.72	222.5	5.84	231.1	6.02	237.6	6.11
		31.8	168.5	3.69	182.5	4.29	198.7	5.00	216.0	5.63	222.5	5.75	231.1	5.92	237.6	6.01
		63.3	168.5	3.39	182.5	4.01	198.7	4.69	216.0	5.27	222.5	5.40	231.1	5.52	237.6	5.63
		79.2	168.5	3.29	182.5	3.91	198.7	4.59	216.0	5.17	222.5	5.29	231.1	5.42	237.6	5.48
	59	23.8	168.5	5.09	182.5	5.92	198.7	6.89	216.0	7.75	222.5	7.94	231.1	8.14	237.6	8.28
		31.8	168.5	4.99	182.5	5.82	198.7	6.78	216.0	7.63	222.5	7.81	231.1	8.01	237.6	8.15
		63.3	168.5	4.59	182.5	5.44	198.7	6.34	216.0	7.14	222.5	7.31	231.1	7.49	237.6	7.63
		79.2	168.5	4.46	182.5	5.32	198.7	6.21	216.0	7.00	222.5	7.17	231.1	7.35	237.6	7.43
	67	23.8	168.5	6.27	182.5	7.30	198.7	8.50	216.0	9.56	222.5	9.80	231.1	10.03	237.6	10.21
		31.8	168.5	6.15	182.5	7.18	198.7	8.36	216.0	9.41	222.5	9.64	231.1	9.87	237.6	10.05
		63.3	168.5	5.66	182.5	6.71	198.7	7.81	216.0	8.80	222.5	9.01	231.1	9.24	237.6	9.41
		79.2	168.5	5.50	182.5	6.57	198.7	7.65	216.0	8.63	222.5	8.84	231.1	9.07	237.6	9.16
	75	23.8	168.5	7.65	182.5	8.89	198.7	10.36	216.0	11.67	222.5	11.94	231.1	12.23	237.6	12.46
		31.8	168.5	7.50	182.5	8.75	198.7	10.19	216.0	11.48	222.5	11.75	231.1	12.04	237.6	12.26
		63.3	168.5	6.90	182.5	8.18	198.7	9.53	216.0	10.73	222.5	10.99	231.1	11.27	237.6	11.47
		79.2	168.5	6.71	182.5	8.01	198.7	9.33	216.0	10.52	222.5	10.78	231.1	11.06	237.6	11.17
	85	23.8	168.5	9.42	182.5	10.94	198.7	12.75	216.0	14.35	222.5	14.69	231.1	15.05	237.6	15.33
		31.8	168.5	9.23	182.5	10.76	198.7	12.54	216.0	14.12	222.5	14.45	231.1	14.81	237.6	15.08
		63.3	168.5	8.49	182.5	10.06	198.7	11.72	216.0	13.20	222.5	13.51	231.1	13.86	237.6	14.11
		79.2	168.5	8.25	182.5	9.85	198.7	11.48	216.0	12.94	222.5	13.26	231.1	13.60	237.6	13.74
	95	23.8	160.1	9.94	173.3	11.55	188.8	13.45	205.2	15.15	211.4	15.51	219.6	15.88	225.7	16.17
		31.8	160.1	9.74	173.3	11.36	188.8	13.23	205.2	14.90	211.4	15.26	219.6	15.63	225.7	15.91
		63.3	160.1	8.96	173.3	10.62	188.8	12.37	205.2	13.93	211.4	14.27	219.6	14.63	225.7	14.89
		79.2	160.1	8.71	173.3	10.40	188.8	12.12	205.2	13.66	211.4	14.00	219.6	14.36	225.7	14.50
	104	23.8	151.6	11.15	164.2	12.96	178.8	15.10	194.4	17.00	200.2	17.40	208.0	17.83	213.8	18.14
		31.8	151.6	10.93	164.2	12.75	178.8	14.85	194.4	16.72	200.2	17.12	208.0	17.54	213.8	17.85
		63.3	151.6	10.05	164.2	11.92	178.8	13.88	194.4	15.63	200.2	16.00	208.0	16.41	213.8	16.71
		79.2	151.6	9.77	164.2	11.66	178.8	13.60	194.4	15.33	200.2	15.71	208.0	16.11	213.8	16.27
	113	23.8	143.1	12.37	155.1	14.37	168.8	16.74	183.6	18.85	189.0	19.30	196.4	19.77	201.9	20.11
		31.8	143.1	12.12	155.1	14.14	168.8	16.47	183.6	18.54	189.0	18.98	196.4	19.45	201.9	19.79
		63.3	143.1	11.14	155.1	13.22	168.8	15.39	183.6	17.33	189.0	17.73	196.4	18.19	201.9	18.53
		79.2	143.1	10.83	155.1	12.92	168.8	15.08	183.6	17.00	189.0	17.42	196.4	17.86	201.9	18.04

TC = Total Cooling Capacity (MBh).
PI = Power input (KW).
Power input (KW) includes compressor(s) and controls.
Test condition based on 25 feet of equivalent refrigerant piping and no change in elevation between indoor unit and water source unit.

Due to our policy of continuous product innovation, some specifications may change without notification.
©LG Electronics U.S.A., Inc., Englewood Cliffs, NJ. All rights reserved. "LG" is a registered trademark of LG Corp.

PERFORMANCE DATA

Cooling Capacity—ARWB216BA2 / ARWN216BA2 (208/230 Volt)

Table 21c: Cooling Capacity ARWB216BA2 / ARWN216BA2

Combination Ratio (%) (Capacity index)	Inlet Water Temperature (°F)	Water Flow Rate (gpm)	Indoor Unit Entering Air Wet Bulb Temperature °F													
			57		61		64		67		70		73		76	
			TC MBh	PI kW	TC MBh	PI kW	TC MBh	PI kW	TC MBh	PI kW	TC MBh	PI kW	TC MBh	PI kW	TC MBh	PI kW
90	50	23.8	151.6	3.23	164.2	3.75	178.8	4.37	194.4	4.93	200.2	5.06	208.0	5.16	213.8	5.27
		31.8	151.6	3.17	164.2	3.69	178.8	4.30	194.4	4.85	200.2	4.98	208.0	5.08	213.8	5.19
		63.3	151.6	2.92	164.2	3.45	178.8	4.01	194.4	4.53	200.2	4.64	208.0	4.76	213.8	4.85
		79.2	151.6	2.83	164.2	3.38	178.8	3.93	194.4	4.43	200.2	4.55	208.0	4.67	213.8	4.71
	59	23.8	151.6	4.38	164.2	5.09	178.8	5.93	194.4	6.68	200.2	6.84	208.0	7.00	213.8	7.13
		31.8	151.6	4.29	164.2	5.01	178.8	5.83	194.4	6.57	200.2	6.73	208.0	6.89	213.8	7.02
		63.3	151.6	3.95	164.2	4.68	178.8	5.45	194.4	6.14	200.2	6.29	208.0	6.45	213.8	6.57
		79.2	151.6	3.84	164.2	4.58	178.8	5.34	194.4	6.02	200.2	6.17	208.0	6.33	213.8	6.39
	67	23.8	151.6	5.40	164.2	6.28	178.8	7.31	194.4	8.23	200.2	8.42	208.0	8.64	213.8	8.79
		31.8	151.6	5.29	164.2	6.18	178.8	7.19	194.4	8.10	200.2	8.29	208.0	8.50	213.8	8.65
		63.3	151.6	4.87	164.2	5.77	178.8	6.73	194.4	7.57	200.2	7.76	208.0	7.95	213.8	8.10
		79.2	151.6	4.74	164.2	5.65	178.8	6.59	194.4	7.43	200.2	7.61	208.0	7.81	213.8	7.88
	75	23.8	151.6	6.59	164.2	7.65	178.8	8.91	194.4	10.04	200.2	10.29	208.0	10.53	213.8	10.72
		31.8	151.6	6.46	164.2	7.53	178.8	8.77	194.4	9.88	200.2	10.12	208.0	10.36	213.8	10.55
		63.3	151.6	5.94	164.2	7.04	178.8	8.20	194.4	9.24	200.2	9.46	208.0	9.70	213.8	9.88
		79.2	151.6	5.77	164.2	6.89	178.8	8.03	194.4	9.06	200.2	9.28	208.0	9.52	213.8	9.62
	85	23.8	151.6	8.10	164.2	9.41	178.8	10.97	194.4	12.35	200.2	12.64	208.0	12.96	213.8	13.19
		31.8	151.6	7.94	164.2	9.26	178.8	10.79	194.4	12.15	200.2	12.44	208.0	12.75	213.8	12.98
		63.3	151.6	7.30	164.2	8.66	178.8	10.09	194.4	11.36	200.2	11.63	208.0	11.93	213.8	12.15
		79.2	151.6	7.10	164.2	8.48	178.8	9.88	194.4	11.14	200.2	11.42	208.0	11.71	213.8	11.83
	95	23.8	147.4	8.74	159.6	10.15	173.9	11.83	189.0	13.32	194.7	13.64	202.2	13.97	207.9	14.23
		31.8	147.4	8.57	159.6	9.99	173.9	11.64	189.0	13.11	194.7	13.42	202.2	13.75	207.9	14.00
		63.3	147.4	7.88	159.6	9.35	173.9	10.89	189.0	12.26	194.7	12.55	202.2	12.87	207.9	13.10
		79.2	147.4	7.66	159.6	9.15	173.9	10.66	189.0	12.02	194.7	12.32	202.2	12.63	207.9	12.76
	104	23.8	143.2	10.04	155.1	11.67	168.9	13.59	183.6	15.31	189.1	15.67	196.5	16.06	202.0	16.34
		31.8	143.2	9.84	155.1	11.48	168.9	13.37	183.6	15.06	189.1	15.42	196.5	15.80	202.0	16.08
		63.3	143.2	9.05	155.1	10.74	168.9	12.51	183.6	14.08	189.1	14.42	196.5	14.79	202.0	15.05
		79.2	143.2	8.80	155.1	10.51	168.9	12.25	183.6	13.81	189.1	14.15	196.5	14.51	202.0	14.66
	113	23.8	139.0	11.33	150.6	13.18	163.9	15.35	178.2	17.29	183.5	17.71	190.8	18.14	196.1	18.45
		31.8	139.0	11.11	150.6	12.97	163.9	15.10	178.2	17.01	183.5	17.42	190.8	17.85	196.1	18.16
		63.3	139.0	10.22	150.6	12.13	163.9	14.13	178.2	15.90	183.5	16.29	190.8	16.71	196.1	17.00
		79.2	139.0	9.94	150.6	11.87	163.9	13.84	178.2	15.60	183.5	15.98	190.8	16.39	196.1	16.56
80	50	23.8	134.8	2.71	146.0	3.15	159.0	3.67	172.8	4.14	178.0	4.24	184.9	4.34	190.1	4.41
		31.8	134.8	2.66	146.0	3.10	159.0	3.61	172.8	4.07	178.0	4.17	184.9	4.27	190.1	4.34
		63.3	134.8	2.44	146.0	2.91	159.0	3.37	172.8	3.80	178.0	3.89	184.9	3.99	190.1	4.05
		79.2	134.8	2.38	146.0	2.83	159.0	3.31	172.8	3.72	178.0	3.81	184.9	3.93	190.1	3.95
	59	23.8	134.8	3.67	146.0	4.27	159.0	4.97	172.8	5.60	178.0	5.73	184.9	5.87	190.1	5.98
		31.8	134.8	3.60	146.0	4.20	159.0	4.89	172.8	5.51	178.0	5.64	184.9	5.78	190.1	5.88
		63.3	134.8	3.31	146.0	3.93	159.0	4.57	172.8	5.15	178.0	5.27	184.9	5.41	190.1	5.50
		79.2	134.8	3.22	146.0	3.84	159.0	4.48	172.8	5.05	178.0	5.17	184.9	5.31	190.1	5.36
	67	23.8	134.8	4.53	146.0	5.27	159.0	6.13	172.8	6.90	178.0	7.06	184.9	7.23	190.1	7.37
		31.8	134.8	4.44	146.0	5.18	159.0	6.03	172.8	6.79	178.0	6.95	184.9	7.12	190.1	7.25
		63.3	134.8	4.08	146.0	4.84	159.0	5.64	172.8	6.35	178.0	6.50	184.9	6.67	190.1	6.79
		79.2	134.8	3.97	146.0	4.74	159.0	5.52	172.8	6.23	178.0	6.38	184.9	6.54	190.1	6.61
	75	23.8	134.8	5.52	146.0	6.41	159.0	7.47	172.8	8.42	178.0	8.62	184.9	8.83	190.1	8.98
		31.8	134.8	5.41	146.0	6.31	159.0	7.35	172.8	8.28	178.0	8.48	184.9	8.69	190.1	8.84
		63.3	134.8	4.98	146.0	5.90	159.0	6.88	172.8	7.74	178.0	7.93	184.9	8.13	190.1	8.28
		79.2	134.8	4.84	146.0	5.78	159.0	6.74	172.8	7.59	178.0	7.78	184.9	7.98	190.1	8.06
	85	23.8	134.8	6.80	146.0	7.90	159.0	9.20	172.8	10.36	178.0	10.60	184.9	10.86	190.1	11.06
		31.8	134.8	6.66	146.0	7.77	159.0	9.05	172.8	10.19	178.0	10.43	184.9	10.69	190.1	10.88
		63.3	134.8	6.12	146.0	7.26	159.0	8.46	172.8	9.52	178.0	9.75	184.9	10.00	190.1	10.18
		79.2	134.8	5.95	146.0	7.11	159.0	8.28	172.8	9.34	178.0	9.57	184.9	9.81	190.1	9.91
	95	23.8	134.8	7.55	146.0	8.77	159.0	10.21	172.8	11.51	178.0	11.78	184.9	12.06	190.1	12.29
		31.8	134.8	7.40	146.0	8.63	159.0	10.05	172.8	11.32	178.0	11.59	184.9	11.87	190.1	12.09
		63.3	134.8	6.80	146.0	8.07	159.0	9.40	172.8	10.58	178.0	10.84	184.9	11.11	190.1	11.31
		79.2	134.8	6.62	146.0	7.90	159.0	9.20	172.8	10.38	178.0	10.63	184.9	10.91	190.1	11.02
	104	23.8	134.8	8.94	146.0	10.39	159.0	12.09	172.8	13.62	178.0	13.94	184.9	14.29	190.1	14.54
		31.8	134.8	8.76	146.0	10.22	159.0	11.90	172.8	13.40	178.0	13.72	184.9	14.06	190.1	14.31
		63.3	134.8	8.06	146.0	9.55	159.0	11.13	172.8	12.53	178.0	12.83	184.9	13.16	190.1	13.40
		79.2	134.8	7.83	146.0	9.35	159.0	10.90	172.8	12.29	178.0	12.59	184.9	12.91	190.1	13.05
	113	23.8	134.8	10.32	146.0	12.01	159.0	13.97	172.8	15.73	178.0	16.11	184.9	16.51	190.1	16.79
		31.8	134.8	10.12	146.0	11.81	159.0	13.75	172.8	15.48	178.0	15.85	184.9	16.25	190.1	16.53
		63.3	134.8	9.32	146.0	11.03	159.0	12.86	172.8	14.48	178.0	14.82	184.9	15.21	190.1	15.49
		79.2	134.8	9.04	146.0	10.80	159.0	12.60	172.8	14.20	178.0	14.55	184.9	14.91	190.1	15.08

TC = Total Cooling Capacity (MBh).
PI = Power input (KW).
Power input (KW) includes compressor(s) and controls.
Test condition based on 25 feet of equivalent refrigerant piping and no change in elevation between indoor unit and water source unit.

Due to our policy of continuous product innovation, some specifications may change without notification.
©LG Electronics U.S.A., Inc., Englewood Cliffs, NJ. All rights reserved. "LG" is a registered trademark of LG Corp.

Cooling Capacity—ARWB216BA2 / ARWN216BA2 (208/230 Volt)

Table 21d: Cooling Capacity ARWB216BA2 / ARWN216BA2

Combination Ratio (%) (Capacity index)	Inlet Water Temperature (°F)	Water Flow Rate (gpm)	Indoor Unit Entering Air Wet Bulb Temperature °F													
			57		61		64		67		70		73		76	
			TC MBh	PI kW	TC MBh	PI kW	TC MBh	PI kW	TC MBh	PI kW	TC MBh	PI kW	TC MBh	PI kW	TC MBh	PI kW
70	50	23.8	117.9	2.25	127.7	2.62	139.1	3.07	151.2	3.43	155.7	3.53	161.8	3.60	166.3	3.66
		31.8	117.9	2.20	127.7	2.58	139.1	3.01	151.2	3.38	155.7	3.46	161.8	3.54	166.3	3.61
		63.3	117.9	2.03	127.7	2.41	139.1	2.80	151.2	3.16	155.7	3.22	161.8	3.31	166.3	3.39
		79.2	117.9	1.98	127.7	2.35	139.1	2.74	151.2	3.10	155.7	3.18	161.8	3.25	166.3	3.29
	59	23.8	117.9	3.05	127.7	3.55	139.1	4.14	151.2	4.66	155.7	4.77	161.8	4.88	166.3	4.97
		31.8	117.9	2.99	127.7	3.49	139.1	4.07	151.2	4.58	155.7	4.69	161.8	4.80	166.3	4.89
		63.3	117.9	2.75	127.7	3.26	139.1	3.80	151.2	4.28	155.7	4.38	161.8	4.49	166.3	4.58
		79.2	117.9	2.68	127.7	3.19	139.1	3.72	151.2	4.20	155.7	4.30	161.8	4.41	166.3	4.46
	67	23.8	117.9	3.77	127.7	4.37	139.1	5.09	151.2	5.74	155.7	5.87	161.8	6.02	166.3	6.13
		31.8	117.9	3.69	127.7	4.30	139.1	5.01	151.2	5.65	155.7	5.78	161.8	5.92	166.3	6.03
		63.3	117.9	3.39	127.7	4.02	139.1	4.69	151.2	5.28	155.7	5.41	161.8	5.54	166.3	5.64
		79.2	117.9	3.30	127.7	3.94	139.1	4.59	151.2	5.18	155.7	5.30	161.8	5.44	166.3	5.50
	75	23.8	117.9	4.59	127.7	5.34	139.1	6.21	151.2	7.00	155.7	7.17	161.8	7.34	166.3	7.47
		31.8	117.9	4.50	127.7	5.25	139.1	6.11	151.2	6.89	155.7	7.05	161.8	7.22	166.3	7.35
		63.3	117.9	4.14	127.7	4.91	139.1	5.72	151.2	6.44	155.7	6.59	161.8	6.76	166.3	6.88
		79.2	117.9	4.02	127.7	4.80	139.1	5.60	151.2	6.31	155.7	6.47	161.8	6.63	166.3	6.70
	85	23.8	117.9	5.65	127.7	6.57	139.1	7.64	151.2	8.61	155.7	8.81	161.8	9.02	166.3	9.18
		31.8	117.9	5.54	127.7	6.46	139.1	7.52	151.2	8.47	155.7	8.67	161.8	8.88	166.3	9.04
		63.3	117.9	5.09	127.7	6.04	139.1	7.03	151.2	7.92	155.7	8.11	161.8	8.32	166.3	8.47
		79.2	117.9	4.95	127.7	5.91	139.1	6.89	151.2	7.76	155.7	7.96	161.8	8.16	166.3	8.24
	95	23.8	117.9	6.27	127.7	7.29	139.1	8.50	151.2	9.56	155.7	9.79	161.8	10.03	166.3	10.21
		31.8	117.9	6.15	127.7	7.17	139.1	8.36	151.2	9.41	155.7	9.63	161.8	9.87	166.3	10.05
		63.3	117.9	5.66	127.7	6.71	139.1	7.81	151.2	8.80	155.7	9.01	161.8	9.24	166.3	9.41
		79.2	117.9	5.50	127.7	6.56	139.1	7.65	151.2	8.63	155.7	8.84	161.8	9.07	166.3	9.16
	104	23.8	117.9	7.43	127.7	8.64	139.1	10.06	151.2	11.32	155.7	11.60	161.8	11.88	166.3	12.09
		31.8	117.9	7.28	127.7	8.50	139.1	9.90	151.2	11.14	155.7	11.41	161.8	11.69	166.3	11.90
		63.3	117.9	6.70	127.7	7.94	139.1	9.25	151.2	10.42	155.7	10.67	161.8	10.94	166.3	11.14
		79.2	117.9	6.51	127.7	7.77	139.1	9.06	151.2	10.22	155.7	10.47	161.8	10.74	166.3	10.85
	113	23.8	117.9	8.58	127.7	10.00	139.1	11.63	151.2	13.08	155.7	13.41	161.8	13.73	166.3	13.97
		31.8	117.9	8.41	127.7	9.83	139.1	11.44	151.2	12.87	155.7	13.19	161.8	13.51	166.3	13.75
		63.3	117.9	7.74	127.7	9.17	139.1	10.69	151.2	12.04	155.7	12.33	161.8	12.64	166.3	12.87
		79.2	117.9	7.52	127.7	8.98	139.1	10.47	151.2	11.81	155.7	12.10	161.8	12.41	166.3	12.54
60	50	23.8	101.1	1.81	109.5	2.08	119.2	2.42	129.6	2.74	133.5	2.81	138.7	2.88	142.6	2.92
		31.8	101.1	1.77	109.5	2.05	119.2	2.39	129.6	2.69	133.5	2.76	138.7	2.83	142.6	2.88
		63.3	101.1	1.61	109.5	1.91	119.2	2.23	129.6	2.51	133.5	2.57	138.7	2.64	142.6	2.69
		79.2	101.1	1.57	109.5	1.89	119.2	2.19	129.6	2.47	133.5	2.53	138.7	2.60	142.6	2.62
	59	23.8	101.1	2.44	109.5	2.83	119.2	3.29	129.6	3.71	133.5	3.80	138.7	3.89	142.6	3.96
		31.8	101.1	2.39	109.5	2.78	119.2	3.24	129.6	3.65	133.5	3.74	138.7	3.83	142.6	3.90
		63.3	101.1	2.19	109.5	2.60	119.2	3.03	129.6	3.41	133.5	3.49	138.7	3.58	142.6	3.65
		79.2	101.1	2.13	109.5	2.55	119.2	2.97	129.6	3.35	133.5	3.43	138.7	3.52	142.6	3.55
	67	23.8	101.1	3.00	109.5	3.49	119.2	4.07	129.6	4.57	133.5	4.69	138.7	4.80	142.6	4.89
		31.8	101.1	2.94	109.5	3.43	119.2	4.00	129.6	4.50	133.5	4.61	138.7	4.72	142.6	4.81
		63.3	101.1	2.71	109.5	3.21	119.2	3.74	129.6	4.21	133.5	4.31	138.7	4.42	142.6	4.50
		79.2	101.1	2.63	109.5	3.14	119.2	3.66	129.6	4.13	133.5	4.23	138.7	4.34	142.6	4.38
	75	23.8	101.1	3.66	109.5	4.25	119.2	4.95	129.6	5.58	133.5	5.71	138.7	5.85	142.6	5.95
		31.8	101.1	3.59	109.5	4.18	119.2	4.87	129.6	5.49	133.5	5.62	138.7	5.76	142.6	5.86
		63.3	101.1	3.30	109.5	3.91	119.2	4.56	129.6	5.13	133.5	5.25	138.7	5.39	142.6	5.49
		79.2	101.1	3.21	109.5	3.83	119.2	4.46	129.6	5.03	133.5	5.16	138.7	5.29	142.6	5.34
	85	23.8	101.1	4.50	109.5	5.24	119.2	6.10	129.6	6.86	133.5	7.02	138.7	7.19	142.6	7.33
		31.8	101.1	4.41	109.5	5.15	119.2	6.00	129.6	6.75	133.5	6.91	138.7	7.08	142.6	7.21
		63.3	101.1	4.06	109.5	4.81	119.2	5.61	129.6	6.31	133.5	6.46	138.7	6.63	142.6	6.75
		79.2	101.1	3.95	109.5	4.71	119.2	5.49	129.6	6.19	133.5	6.34	138.7	6.51	142.6	6.57
	95	23.8	101.1	5.00	109.5	5.81	119.2	6.77	129.6	7.62	133.5	7.81	138.7	8.00	142.6	8.14
		31.8	101.1	4.90	109.5	5.72	119.2	6.66	129.6	7.50	133.5	7.68	138.7	7.87	142.6	8.01
		63.3	101.1	4.51	109.5	5.35	119.2	6.23	129.6	7.01	133.5	7.18	138.7	7.37	142.6	7.50
		79.2	101.1	4.38	109.5	5.23	119.2	6.10	129.6	6.88	133.5	7.05	138.7	7.23	142.6	7.30
	104	23.8	101.1	5.93	109.5	6.88	119.2	8.02	129.6	9.02	133.5	9.25	138.7	9.47	142.6	9.64
		31.8	101.1	5.81	109.5	6.77	119.2	7.89	129.6	8.88	133.5	9.10	138.7	9.32	142.6	9.49
		63.3	101.1	5.34	109.5	6.33	119.2	7.38	129.6	8.31	133.5	8.50	138.7	8.72	142.6	8.88
		79.2	101.1	5.19	109.5	6.20	119.2	7.22	129.6	8.14	133.5	8.35	138.7	8.56	142.6	8.65
	113	23.8	101.1	6.86	109.5	7.95	119.2	9.27	129.6	10.42	133.5	10.70	138.7	10.95	142.6	11.15
		31.8	101.1	6.72	109.5	7.82	119.2	9.12	129.6	10.26	133.5	10.52	138.7	10.77	142.6	10.97
		63.3	101.1	6.17	109.5	7.31	119.2	8.53	129.6	9.61	133.5	9.82	138.7	10.07	142.6	10.26
		79.2	101.1	6.00	109.5	7.17	119.2	8.34	129.6	9.40	133.5	9.65	138.7	9.89	142.6	10.00

TC = Total Cooling Capacity (MBh).
PI = Power input (KW).
Power input (KW) includes compressor(s) and controls.
Test condition based on 25 feet of equivalent refrigerant piping and no change in elevation between indoor unit and water source unit.

Due to our policy of continuous product innovation, some specifications may change without notification.
©LG Electronics U.S.A., Inc., Englewood Cliffs, NJ. All rights reserved. "LG" is a registered trademark of LG Corp.

PERFORMANCE DATA

Cooling Capacity—ARWB216BA2 / ARWN216BA2 (208/230 Volt)

Table 21e: Cooling Capacity ARWB216BA2 / ARWN216BA2

Combination Ratio (%) (Capacity index)	Inlet Water Temperature (°F)	Water Flow Rate (gpm)	Indoor Unit Entering Air Wet Bulb Temperature °F													
			57		61		64		67		70		73		76	
			TC	PI	TC	PI	TC	PI	TC	PI	TC	PI	TC	PI	TC	PI
			MBh	kW	MBh	kW	MBh	kW	MBh	kW	MBh	kW	MBh	kW	MBh	kW
50	50	23.8	84.2	1.35	91.2	1.54	99.4	1.82	108.0	2.03	111.2	2.09	115.6	2.13	118.8	2.19
		31.8	84.2	1.32	91.2	1.52	99.4	1.79	108.0	2.00	111.2	2.06	115.6	2.10	118.8	2.16
		63.3	84.2	1.21	91.2	1.43	99.4	1.66	108.0	1.87	111.2	1.94	115.6	1.96	118.8	2.01
		79.2	84.2	1.17	91.2	1.41	99.4	1.63	108.0	1.83	111.2	1.90	115.6	1.93	118.8	1.95
	59	23.8	84.2	1.82	91.2	2.10	99.4	2.46	108.0	2.77	111.2	2.84	115.6	2.90	118.8	2.96
		31.8	84.2	1.78	91.2	2.07	99.4	2.42	108.0	2.72	111.2	2.79	115.6	2.85	118.8	2.91
		63.3	84.2	1.64	91.2	1.94	99.4	2.26	108.0	2.54	111.2	2.61	115.6	2.67	118.8	2.72
		79.2	84.2	1.59	91.2	1.90	99.4	2.21	108.0	2.49	111.2	2.56	115.6	2.62	118.8	2.65
	67	23.8	84.2	2.23	91.2	2.60	99.4	3.03	108.0	3.42	111.2	3.50	115.6	3.58	118.8	3.64
		31.8	84.2	2.19	91.2	2.56	99.4	2.98	108.0	3.36	111.2	3.44	115.6	3.52	118.8	3.58
		63.3	84.2	2.02	91.2	2.39	99.4	2.79	108.0	3.14	111.2	3.21	115.6	3.30	118.8	3.35
		79.2	84.2	1.96	91.2	2.34	99.4	2.73	108.0	3.08	111.2	3.15	115.6	3.23	118.8	3.27
	75	23.8	84.2	2.72	91.2	3.17	99.4	3.69	108.0	4.16	111.2	4.26	115.6	4.36	118.8	4.44
		31.8	84.2	2.67	91.2	3.12	99.4	3.63	108.0	4.09	111.2	4.19	115.6	4.29	118.8	4.37
		63.3	84.2	2.46	91.2	2.92	99.4	3.40	108.0	3.83	111.2	3.92	115.6	4.02	118.8	4.09
		79.2	84.2	2.39	91.2	2.86	99.4	3.33	108.0	3.75	111.2	3.85	115.6	3.94	118.8	3.98
	85	23.8	84.2	3.36	91.2	3.90	99.4	4.54	108.0	5.11	111.2	5.23	115.6	5.37	118.8	5.47
		31.8	84.2	3.29	91.2	3.84	99.4	4.47	108.0	5.03	111.2	5.15	115.6	5.28	118.8	5.38
		63.3	84.2	3.03	91.2	3.59	99.4	4.18	108.0	4.71	111.2	4.82	115.6	4.94	118.8	5.03
		79.2	84.2	2.94	91.2	3.51	99.4	4.09	108.0	4.61	111.2	4.73	115.6	4.85	118.8	4.90
	95	23.8	84.2	3.74	91.2	4.33	99.4	5.05	108.0	5.68	111.2	5.83	115.6	5.97	118.8	6.07
		31.8	84.2	3.66	91.2	4.26	99.4	4.97	108.0	5.59	111.2	5.73	115.6	5.87	118.8	5.97
		63.3	84.2	3.36	91.2	3.99	99.4	4.64	108.0	5.23	111.2	5.35	115.6	5.49	118.8	5.59
		79.2	84.2	3.27	91.2	3.90	99.4	4.55	108.0	5.13	111.2	5.25	115.6	5.39	118.8	5.44
	104	23.8	84.2	4.42	91.2	5.13	99.4	5.98	108.0	6.73	111.2	6.89	115.6	7.06	118.8	7.18
		31.8	84.2	4.33	91.2	5.05	99.4	5.88	108.0	6.62	111.2	6.78	115.6	6.95	118.8	7.07
		63.3	84.2	3.98	91.2	4.72	99.4	5.50	108.0	6.19	111.2	6.34	115.6	6.50	118.8	6.62
		79.2	84.2	3.87	91.2	4.62	99.4	5.39	108.0	6.07	111.2	6.22	115.6	6.38	118.8	6.45
	113	23.8	84.2	5.10	91.2	5.94	99.4	6.90	108.0	7.78	111.2	7.96	115.6	8.16	118.8	8.30
		31.8	84.2	5.00	91.2	5.84	99.4	6.79	108.0	7.65	111.2	7.83	115.6	8.03	118.8	8.17
		63.3	84.2	4.60	91.2	5.45	99.4	6.36	108.0	7.15	111.2	7.33	115.6	7.51	118.8	7.65
		79.2	84.2	4.47	91.2	5.34	99.4	6.23	108.0	7.01	111.2	7.19	115.6	7.37	118.8	7.46

TC = Total Cooling Capacity (MBh).
PI = Power input (KW).
Power input (KW) includes compressor(s) and controls.
Test condition based on 25 feet of equivalent refrigerant piping and no change in elevation between indoor unit and water source unit.

Due to our policy of continuous product innovation, some specifications may change without notification.
©LG Electronics U.S.A., Inc., Englewood Cliffs, NJ. All rights reserved. "LG" is a registered trademark of LG Corp.

PERFORMANCE DATA

Cooling Capacity—ARWB288BA2 / ARWN288BA2 (208/230 Volt)

Table 22a: Cooling Capacity ARWB288BA2 / ARWN288BA2

Combination Ratio (%) (Capacity index)	Inlet Water Temperature (°F)	Water Flow Rate (gpm)	Indoor Unit Entering Air Wet Bulb Temperature °F													
			57		61		64		67		70		73		76	
			TC MBh	PI kW	TC MBh	PI kW	TC MBh	PI kW	TC MBh	PI kW	TC MBh	PI kW	TC MBh	PI kW	TC MBh	PI kW
130	50	31.8	267.6	5.95	289.8	6.91	315.7	8.03	343.1	9.1	353.3	9.27	367.3	9.50	377.5	9.67
		42.4	267.6	5.83	289.8	6.79	315.7	7.90	343.1	8.9	353.3	9.12	367.3	9.36	377.5	9.52
		84.4	267.6	5.34	289.8	6.35	315.7	7.40	343.1	8.3	353.3	8.53	367.3	8.77	377.5	8.94
		105.6	267.6	5.21	289.8	6.21	315.7	7.26	343.1	8.2	353.3	8.39	367.3	8.60	377.5	8.75
	59	31.8	263.3	7.81	285.2	9.07	310.6	10.56	337.6	11.9	347.7	12.17	361.3	12.47	371.4	12.69
		42.4	263.3	7.65	285.2	8.92	310.6	10.39	337.6	11.7	347.7	11.98	361.3	12.28	371.4	12.50
		84.4	263.3	7.03	285.2	8.34	310.6	9.72	337.6	10.9	347.7	11.21	361.3	11.51	371.4	11.74
		105.6	263.3	6.84	285.2	8.16	310.6	9.52	337.6	10.7	347.7	11.01	361.3	11.29	371.4	11.48
	67	31.8	259.5	9.46	281.1	10.99	306.1	12.81	332.7	14.4	342.7	14.75	356.0	15.11	366.0	15.38
		42.4	259.5	9.27	281.1	10.81	306.1	12.60	332.7	14.2	342.7	14.52	356.0	14.88	366.0	15.15
		84.4	259.5	8.53	281.1	10.11	306.1	11.78	332.7	13.3	342.7	13.59	356.0	13.95	366.0	14.23
		105.6	259.5	8.29	281.1	9.89	306.1	11.53	332.7	13.0	342.7	13.34	356.0	13.68	366.0	13.91
	75	31.8	259.5	11.66	281.1	13.56	306.1	15.79	332.7	17.8	342.7	18.20	356.0	18.64	366.0	18.97
		42.4	259.5	11.43	281.1	13.34	306.1	15.53	332.7	17.5	342.7	17.91	356.0	18.35	366.0	18.68
		84.4	259.5	10.51	281.1	12.47	306.1	14.52	332.7	16.4	342.7	16.76	356.0	17.21	366.0	17.55
		105.6	259.5	10.22	281.1	12.20	306.1	14.23	332.7	16.0	342.7	16.45	356.0	16.87	366.0	17.16
	85	31.8	259.5	14.00	281.1	16.26	306.1	18.95	332.7	21.3	342.7	21.84	356.0	22.37	366.0	22.76
		42.4	259.5	13.72	281.1	16.00	306.1	18.64	332.7	21.0	342.7	21.49	356.0	22.02	366.0	22.42
		84.4	259.5	12.62	281.1	14.96	306.1	17.43	332.7	19.6	342.7	20.11	356.0	20.65	366.0	21.06
		105.6	259.5	12.27	281.1	14.64	306.1	17.07	332.7	19.2	342.7	19.74	356.0	20.24	366.0	20.59
	95	31.8	233.6	14.15	252.9	16.45	275.5	19.16	299.5	21.6	308.4	22.08	320.4	22.62	329.4	23.02
		42.4	233.6	13.87	252.9	16.18	275.5	18.85	299.5	21.2	308.4	21.73	320.4	22.27	329.4	22.67
		84.4	233.6	12.76	252.9	15.13	275.5	17.62	299.5	19.9	308.4	20.34	320.4	20.88	329.4	21.30
		105.6	233.6	12.41	252.9	14.81	275.5	17.26	299.5	19.5	308.4	19.96	320.4	20.47	329.4	20.82
	104	31.8	207.6	14.93	224.8	17.35	244.9	20.21	266.2	22.8	274.2	23.29	284.8	23.86	292.8	24.27
		42.4	207.6	14.63	224.8	17.07	244.9	19.88	266.2	22.4	274.2	22.92	284.8	23.49	292.8	23.91
		84.4	207.6	13.46	224.8	15.96	244.9	18.59	266.2	20.9	274.2	21.46	284.8	22.03	292.8	22.47
		105.6	207.6	13.09	224.8	15.62	244.9	18.21	266.2	20.5	274.2	21.06	284.8	21.59	292.8	21.96
	113	31.8	181.6	15.70	196.7	18.26	214.3	21.25	232.9	23.9	240.0	24.50	249.2	25.10	256.2	25.53
		42.4	181.6	15.39	196.7	17.96	214.3	20.91	232.9	23.6	240.0	24.11	249.2	24.71	256.2	25.15
		84.4	181.6	14.16	196.7	16.79	214.3	19.56	232.9	22.0	240.0	22.58	249.2	23.18	256.2	23.64
		105.6	181.6	13.77	196.7	16.43	214.3	19.16	232.9	21.6	240.0	22.16	249.2	22.71	256.2	23.10
120	50	31.8	253.2	5.65	274.2	6.53	298.8	7.62	324.8	8.6	334.4	8.79	347.5	8.98	357.3	9.14
		42.4	253.2	5.53	274.2	6.43	298.8	7.50	324.8	8.4	334.4	8.65	347.5	8.85	357.3	9.00
		84.4	253.2	5.08	274.2	6.02	298.8	7.01	324.8	7.9	334.4	8.08	347.5	8.31	357.3	8.46
		105.6	253.2	4.93	274.2	5.90	298.8	6.86	324.8	7.7	334.4	7.93	347.5	8.14	357.3	8.25
	59	31.8	250.4	7.47	271.2	8.67	295.4	10.10	321.1	11.4	330.7	11.65	343.6	11.92	353.2	12.13
		42.4	250.4	7.32	271.2	8.53	295.4	9.94	321.1	11.2	330.7	11.46	343.6	11.74	353.2	11.95
		84.4	250.4	6.73	271.2	7.98	295.4	9.29	321.1	10.5	330.7	10.72	343.6	11.01	353.2	11.22
		105.6	250.4	6.54	271.2	7.81	295.4	9.10	321.1	10.3	330.7	10.52	343.6	10.79	353.2	10.95
	67	31.8	247.9	9.09	268.5	10.57	292.4	12.31	317.8	13.9	327.4	14.18	340.1	14.54	349.6	14.80
		42.4	247.9	8.91	268.5	10.40	292.4	12.11	317.8	13.6	327.4	13.96	340.1	14.31	349.6	14.57
		84.4	247.9	8.20	268.5	9.72	292.4	11.32	317.8	12.8	327.4	13.07	340.1	13.41	349.6	13.67
		105.6	247.9	7.97	268.5	9.51	292.4	11.09	317.8	12.5	327.4	12.82	340.1	13.15	349.6	13.35
	75	31.8	247.9	11.18	268.5	12.99	292.4	15.14	317.8	17.0	327.4	17.44	340.1	17.86	349.6	18.18
		42.4	247.9	10.96	268.5	12.78	292.4	14.89	317.8	16.8	327.4	17.16	340.1	17.58	349.6	17.90
		84.4	247.9	10.08	268.5	11.95	292.4	13.92	317.8	15.7	327.4	16.06	340.1	16.48	349.6	16.80
		105.6	247.9	9.80	268.5	11.69	292.4	13.63	317.8	15.4	327.4	15.76	340.1	16.16	349.6	16.40
	85	31.8	247.9	13.52	268.5	15.70	292.4	18.30	317.8	20.6	327.4	21.09	340.1	21.60	349.6	21.99
		42.4	247.9	13.25	268.5	15.45	292.4	18.00	317.8	20.3	327.4	20.75	340.1	21.26	349.6	21.65
		84.4	247.9	12.18	268.5	14.45	292.4	16.83	317.8	19.0	327.4	19.42	340.1	19.93	349.6	20.31
		105.6	247.9	11.85	268.5	14.14	292.4	16.48	317.8	18.6	327.4	19.05	340.1	19.54	349.6	19.83
	95	31.8	226.9	13.86	245.7	16.10	267.6	18.75	290.8	21.1	299.6	21.62	311.2	22.14	319.9	22.54
		42.4	226.9	13.58	245.7	15.84	267.6	18.45	290.8	20.8	299.6	21.27	311.2	21.79	319.9	22.19
		84.4	226.9	12.49	245.7	14.81	267.6	17.25	290.8	19.4	299.6	19.90	311.2	20.42	319.9	20.82
		105.6	226.9	12.14	245.7	14.49	267.6	16.89	290.8	19.0	299.6	19.53	311.2	20.03	319.9	20.33
	104	31.8	205.8	14.91	222.9	17.32	242.7	20.18	263.9	22.7	271.8	23.26	282.3	23.82	290.2	24.25
		42.4	205.8	14.61	222.9	17.04	242.7	19.85	263.9	22.4	271.8	22.89	282.3	23.45	290.2	23.88
		84.4	205.8	13.44	222.9	15.94	242.7	18.56	263.9	20.9	271.8	21.42	282.3	21.98	290.2	22.40
		105.6	205.8	13.07	222.9	15.60	242.7	18.18	263.9	20.5	271.8	21.02	282.3	21.56	290.2	21.87
	113	31.8	184.7	15.96	200.1	18.54	217.8	21.60	237.0	24.3	244.0	24.91	253.4	25.51	260.5	25.97
		42.4	184.7	15.64	200.1	18.24	217.8	21.25	237.0	24.0	244.0	24.51	253.4	25.11	260.5	25.57
		84.4	184.7	14.39	200.1	17.07	217.8	19.87	237.0	22.4	244.0	22.94	253.4	23.54	260.5	23.98
		105.6	184.7	14.00	200.1	16.71	217.8	19.47	237.0	21.9	244.0	22.51	253.4	23.09	260.5	23.41

TC = Total Cooling Capacity (MBh).
PI = Power input (KW).
Power input (KW) includes compressor(s) and controls.
Test condition based on 25 feet of equivalent refrigerant piping and no change in elevation between indoor unit and water source unit.

LG
Due to our policy of continuous product innovation, some specifications may change without notification.
©LG Electronics U.S.A., Inc., Englewood Cliffs, NJ. All rights reserved. "LG" is a registered trademark of LG Corp.

PERFORMANCE DATA

Cooling Capacity—ARWB288BA2 / ARWN288BA2 (208/230 Volt)

Table 22b: Cooling Capacity ARWB288BA2 / ARWN288BA2

Combination Ratio (%) (Capacity index)	Inlet Water Temperature (°F)	Water Flow Rate (gpm)	Indoor Unit Entering Air Wet Bulb Temperature °F													
			57		61		64		67		70		73		76	
			TC MBh	PI kW	TC MBh	PI kW	TC MBh	PI kW	TC MBh	PI kW	TC MBh	PI kW	TC MBh	PI kW	TC MBh	PI kW
110	50	31.8	238.9	5.31	258.7	6.19	281.9	7.20	306.3	8.1	315.6	8.30	327.9	8.49	337.0	8.66
		42.4	238.9	5.20	258.7	6.09	281.9	7.08	306.3	8.0	315.6	8.16	327.9	8.36	337.0	8.52
		84.4	238.9	4.79	258.7	5.70	281.9	6.62	306.3	7.5	315.6	7.63	327.9	7.85	337.0	7.97
		105.6	238.9	4.65	258.7	5.56	281.9	6.49	306.3	7.3	315.6	7.49	327.9	7.69	337.0	7.79
	59	31.8	237.5	7.12	257.2	8.28	280.2	9.65	304.5	10.9	313.7	11.12	325.9	11.39	335.0	11.59
		42.4	237.5	6.98	257.2	8.15	280.2	9.49	304.5	10.7	313.7	10.94	325.9	11.21	335.0	11.41
		84.4	237.5	6.42	257.2	7.62	280.2	8.87	304.5	10.0	313.7	10.23	325.9	10.50	335.0	10.69
		105.6	237.5	6.24	257.2	7.45	280.2	8.69	304.5	9.8	313.7	10.04	325.9	10.30	335.0	10.43
	67	31.8	236.3	8.73	255.9	10.14	278.7	11.82	302.9	13.3	312.0	13.63	324.1	13.96	333.2	14.20
		42.4	236.3	8.56	255.9	9.98	278.7	11.63	302.9	13.1	312.0	13.41	324.1	13.74	333.2	13.98
		84.4	236.3	7.87	255.9	9.33	278.7	10.87	302.9	12.2	312.0	12.54	324.1	12.86	333.2	13.11
		105.6	236.3	7.65	255.9	9.13	278.7	10.65	302.9	12.0	312.0	12.31	324.1	12.62	333.2	12.78
	75	31.8	236.3	10.69	255.9	12.42	278.7	14.47	302.9	16.3	312.0	16.69	324.1	17.09	333.2	17.39
		42.4	236.3	10.48	255.9	12.22	278.7	14.24	302.9	16.0	312.0	16.42	324.1	16.82	333.2	17.12
		84.4	236.3	9.64	255.9	11.43	278.7	13.31	302.9	15.0	312.0	15.35	324.1	15.75	333.2	16.05
		105.6	236.3	9.37	255.9	11.18	278.7	13.04	302.9	14.7	312.0	15.07	324.1	15.45	333.2	15.65
	85	31.8	236.3	13.03	255.9	15.15	278.7	17.65	302.9	19.9	312.0	20.34	324.1	20.83	333.2	21.20
		42.4	236.3	12.77	255.9	14.90	278.7	17.36	302.9	19.6	312.0	20.01	324.1	20.50	333.2	20.87
		84.4	236.3	11.75	255.9	13.93	278.7	16.23	302.9	18.3	312.0	18.72	324.1	19.20	333.2	19.56
		105.6	236.3	11.42	255.9	13.63	278.7	15.90	302.9	17.9	312.0	18.37	324.1	18.84	333.2	19.08
	95	31.8	220.1	13.55	238.4	15.74	259.6	18.35	282.2	20.7	290.7	21.15	302.0	21.66	310.4	22.04
		42.4	220.1	13.28	238.4	15.49	259.6	18.05	282.2	20.3	290.7	20.81	302.0	21.32	310.4	21.70
		84.4	220.1	12.21	238.4	14.49	259.6	16.87	282.2	19.0	290.7	19.46	302.0	19.97	310.4	20.34
		105.6	220.1	11.88	238.4	14.18	259.6	16.53	282.2	18.6	290.7	19.10	302.0	19.59	310.4	19.83
	104	31.8	204.0	14.89	220.9	17.30	240.6	20.14	261.5	22.7	269.4	23.23	279.8	23.80	287.7	24.22
		42.4	204.0	14.59	220.9	17.02	240.6	19.82	261.5	22.3	269.4	22.86	279.8	23.42	287.7	23.84
		84.4	204.0	13.42	220.9	15.91	240.6	18.54	261.5	20.9	269.4	21.38	279.8	21.93	287.7	22.34
		105.6	204.0	13.05	220.9	15.57	240.6	18.16	261.5	20.5	269.4	20.98	279.8	21.52	287.7	21.78
	113	31.8	187.9	16.22	203.4	18.86	221.6	21.94	240.8	24.7	248.1	25.32	257.6	25.93	265.0	26.39
		42.4	187.9	15.90	203.4	18.55	221.6	21.59	240.8	24.3	248.1	24.91	257.6	25.52	265.0	25.98
		84.4	187.9	14.63	203.4	17.33	221.6	20.21	240.8	22.7	248.1	23.30	257.6	23.89	265.0	24.34
		105.6	187.9	14.22	203.4	16.96	221.6	19.79	240.8	22.3	248.1	22.86	257.6	23.45	265.0	23.73
100	50	31.8	224.6	5.00	243.3	5.82	265.0	6.79	288.0	7.6	296.6	7.81	308.2	8.00	316.8	8.16
		42.4	224.6	4.91	243.3	5.72	265.0	6.68	288.0	7.5	296.6	7.69	308.2	7.87	316.8	8.02
		84.4	224.6	4.52	243.3	5.34	265.0	6.23	288.0	7.0	296.6	7.19	308.2	7.37	316.8	7.50
		105.6	224.6	4.40	243.3	5.24	265.0	6.09	288.0	6.9	296.6	7.05	308.2	7.22	316.8	7.30
	59	31.8	224.6	6.78	243.3	7.89	265.0	9.19	288.0	10.3	296.6	10.59	308.2	10.84	316.8	11.05
		42.4	224.6	6.65	243.3	7.76	265.0	9.04	288.0	10.2	296.6	10.42	308.2	10.67	316.8	10.87
		84.4	224.6	6.12	243.3	7.25	265.0	8.45	288.0	9.5	296.6	9.74	308.2	9.99	316.8	10.17
		105.6	224.6	5.95	243.3	7.10	265.0	8.27	288.0	9.3	296.6	9.56	308.2	9.80	316.8	9.90
	67	31.8	224.6	8.37	243.3	9.73	265.0	11.32	288.0	12.8	296.6	13.06	308.2	13.37	316.8	13.62
		42.4	224.6	8.20	243.3	9.57	265.0	11.14	288.0	12.6	296.6	12.85	308.2	13.16	316.8	13.40
		84.4	224.6	7.54	243.3	8.95	265.0	10.42	288.0	11.7	296.6	12.01	308.2	12.32	316.8	12.54
		105.6	224.6	7.33	243.3	8.75	265.0	10.21	288.0	11.5	296.6	11.79	308.2	12.09	316.8	12.21
	75	31.8	224.6	10.20	243.3	11.86	265.0	13.81	288.0	15.6	296.6	15.93	308.2	16.31	316.8	16.60
		42.4	224.6	10.00	243.3	11.67	265.0	13.59	288.0	15.3	296.6	15.67	308.2	16.05	316.8	16.34
		84.4	224.6	9.20	243.3	10.91	265.0	12.71	288.0	14.3	296.6	14.65	308.2	15.03	316.8	15.30
		105.6	224.6	8.94	243.3	10.68	265.0	12.45	288.0	14.0	296.6	14.38	308.2	14.74	316.8	14.89
	85	31.8	224.6	12.55	243.3	14.58	265.0	17.00	288.0	19.1	296.6	19.59	308.2	20.07	316.8	20.43
		42.4	224.6	12.30	243.3	14.35	265.0	16.72	288.0	18.8	296.6	19.27	308.2	19.75	316.8	20.10
		84.4	224.6	11.31	243.3	13.42	265.0	15.63	288.0	17.6	296.6	18.02	308.2	18.48	316.8	18.81
		105.6	224.6	11.00	243.3	13.13	265.0	15.31	288.0	17.3	296.6	17.68	308.2	18.14	316.8	18.32
	95	31.8	213.4	13.26	231.1	15.40	251.7	17.93	273.6	20.2	281.8	20.67	292.8	21.18	301.0	21.56
		42.4	213.4	12.99	231.1	15.15	251.7	17.64	273.6	19.9	281.8	20.34	292.8	20.84	301.0	21.22
		84.4	213.4	11.94	231.1	14.16	251.7	16.50	273.6	18.6	281.8	19.02	292.8	19.51	301.0	19.86
		105.6	213.4	11.61	231.1	13.86	251.7	16.16	273.6	18.2	281.8	18.67	292.8	19.14	301.0	19.34
	104	31.8	202.2	14.87	218.9	17.27	238.5	20.13	259.2	22.7	267.0	23.19	277.3	23.76	285.1	24.20
		42.4	202.2	14.57	218.9	16.99	238.5	19.80	259.2	22.3	267.0	22.82	277.3	23.38	285.1	23.81
		84.4	202.2	13.40	218.9	15.89	238.5	18.51	259.2	20.8	267.0	21.34	277.3	21.89	285.1	22.28
		105.6	202.2	13.03	218.9	15.55	238.5	18.13	259.2	20.4	267.0	20.94	277.3	21.48	285.1	21.69
	113	31.8	191.0	16.48	206.7	19.14	225.3	22.32	244.8	25.1	252.2	25.71	261.8	26.34	269.2	26.83
		42.4	191.0	16.15	206.7	18.83	225.3	21.96	244.8	24.7	252.2	25.30	261.8	25.92	269.2	26.40
		84.4	191.0	14.86	206.7	17.62	225.3	20.52	244.8	23.1	252.2	23.66	261.8	24.27	269.2	24.70
		105.6	191.0	14.45	206.7	17.24	225.3	20.10	244.8	22.7	252.2	23.21	261.8	23.82	269.2	24.04

TC = Total Cooling Capacity (MBh).
PI = Power input (KW).
Power input (KW) includes compressor(s) and controls.
Test condition based on 25 feet of equivalent refrigerant piping and no change in elevation between indoor unit and water source unit.

Due to our policy of continuous product innovation, some specifications may change without notification.
©LG Electronics U.S.A., Inc., Englewood Cliffs, NJ. All rights reserved. "LG" is a registered trademark of LG Corp.

PERFORMANCE DATA

Cooling Capacity—ARWB288BA2 / ARWN288BA2 (208/230 Volt)

Table 22c: Cooling Capacity ARWB288BA2 / ARWN288BA2

Combination Ratio (%) (Capacity index)	Inlet Water Temperature (°F)	Water Flow Rate (gpm)	Indoor Unit Entering Air Wet Bulb Temperature °F													
			57		61		64		67		70		73		76	
			TC	PI	TC	PI	TC	PI	TC	PI	TC	PI	TC	PI	TC	PI
			MBh	kW	MBh	kW	MBh	kW	MBh	kW	MBh	kW	MBh	kW	MBh	kW
90	50	31.8	202.2	4.30	218.9	5.01	238.5	5.84	259.2	6.6	267.0	6.73	277.3	6.89	285.1	7.00
		42.4	202.2	4.21	218.9	4.93	238.5	5.74	259.2	6.5	267.0	6.62	277.3	6.78	285.1	6.89
		84.4	202.2	3.88	218.9	4.60	238.5	5.36	259.2	6.0	267.0	6.18	277.3	6.34	285.1	6.44
		105.6	202.2	3.78	218.9	4.50	238.5	5.25	259.2	5.9	267.0	6.07	277.3	6.22	285.1	6.28
	59	31.8	202.2	5.84	218.9	6.79	238.5	7.91	259.2	8.9	267.0	9.12	277.3	9.34	285.1	9.50
		42.4	202.2	5.72	218.9	6.68	238.5	7.78	259.2	8.8	267.0	8.97	277.3	9.19	285.1	9.35
		84.4	202.2	5.26	218.9	6.24	238.5	7.27	259.2	8.2	267.0	8.38	277.3	8.60	285.1	8.75
		105.6	202.2	5.12	218.9	6.11	238.5	7.12	259.2	8.0	267.0	8.23	277.3	8.44	285.1	8.52
	67	31.8	202.2	7.20	218.9	8.38	238.5	9.75	259.2	11.0	267.0	11.24	277.3	11.51	285.1	11.73
		42.4	202.2	7.06	218.9	8.24	238.5	9.59	259.2	10.8	267.0	11.06	277.3	11.33	285.1	11.54
		84.4	202.2	6.49	218.9	7.70	238.5	8.97	259.2	10.1	267.0	10.34	277.3	10.61	285.1	10.80
		105.6	202.2	6.31	218.9	7.54	238.5	8.78	259.2	9.9	267.0	10.15	277.3	10.41	285.1	10.51
	75	31.8	202.2	8.78	218.9	10.20	238.5	11.89	259.2	13.4	267.0	13.71	277.3	14.04	285.1	14.30
		42.4	202.2	8.61	218.9	10.04	238.5	11.70	259.2	13.2	267.0	13.49	277.3	13.82	285.1	14.07
		84.4	202.2	7.92	218.9	9.39	238.5	10.94	259.2	12.3	267.0	12.61	277.3	12.93	285.1	13.17
		105.6	202.2	7.70	218.9	9.19	238.5	10.71	259.2	12.1	267.0	12.38	277.3	12.69	285.1	12.82
	85	31.8	202.2	10.80	218.9	12.55	238.5	14.63	259.2	16.5	267.0	16.86	277.3	17.28	285.1	17.58
		42.4	202.2	10.59	218.9	12.35	238.5	14.39	259.2	16.2	267.0	16.59	277.3	17.00	285.1	17.30
		84.4	202.2	9.74	218.9	11.55	238.5	13.45	259.2	15.2	267.0	15.51	277.3	15.91	285.1	16.20
		105.6	202.2	9.47	218.9	11.30	238.5	13.18	259.2	14.9	267.0	15.22	277.3	15.61	285.1	15.77
	95	31.8	196.6	11.65	212.9	13.55	231.8	15.78	252.0	17.8	259.6	18.20	269.6	18.64	277.2	18.97
		42.4	196.6	11.42	212.9	13.33	231.8	15.52	252.0	17.5	259.6	17.90	269.6	18.34	277.2	18.67
		84.4	196.6	10.51	212.9	12.46	231.8	14.51	252.0	16.3	259.6	16.73	269.6	17.16	277.2	17.47
		105.6	196.6	10.22	212.9	12.19	231.8	14.22	252.0	16.0	259.6	16.42	269.6	16.84	277.2	17.01
	104	31.8	190.9	13.39	206.8	15.56	225.2	18.12	244.8	20.4	252.1	20.90	261.9	21.41	269.3	21.80
		42.4	190.9	13.12	206.8	15.31	225.2	17.83	244.8	20.1	252.1	20.56	261.9	21.07	269.3	21.45
		84.4	190.9	12.07	206.8	14.31	225.2	16.67	244.8	18.8	252.1	19.22	261.9	19.72	269.3	20.07
		105.6	190.9	11.74	206.8	14.01	225.2	16.33	244.8	18.4	252.1	18.87	261.9	19.35	269.3	19.54
	113	31.8	185.2	15.12	200.7	17.58	218.6	20.47	237.6	23.0	244.6	23.60	254.2	24.18	261.4	24.62
		42.4	185.2	14.82	200.7	17.29	218.6	20.14	237.6	22.7	244.6	23.22	254.2	23.80	261.4	24.23
		84.4	185.2	13.63	200.7	16.16	218.6	18.83	237.6	21.2	244.6	21.71	254.2	22.28	261.4	22.67
		105.6	185.2	13.26	200.7	15.83	218.6	18.44	237.6	20.8	244.6	21.32	254.2	21.86	261.4	22.07
80	50	31.8	179.7	3.61	194.6	4.21	212.0	4.89	230.4	5.5	237.3	5.64	246.5	5.76	253.4	5.87
		42.4	179.7	3.54	194.6	4.14	212.0	4.81	230.4	5.4	237.3	5.55	246.5	5.68	253.4	5.78
		84.4	179.7	3.25	194.6	3.86	212.0	4.50	230.4	5.0	237.3	5.19	246.5	5.32	253.4	5.42
		105.6	179.7	3.17	194.6	3.77	212.0	4.41	230.4	5.0	237.3	5.09	246.5	5.21	253.4	5.28
	59	31.8	179.7	4.90	194.6	5.69	212.0	6.63	230.4	7.5	237.3	7.64	246.5	7.82	253.4	7.97
		42.4	179.7	4.80	194.6	5.60	212.0	6.52	230.4	7.3	237.3	7.52	246.5	7.70	253.4	7.84
		84.4	179.7	4.41	194.6	5.23	212.0	6.10	230.4	6.9	237.3	7.03	246.5	7.21	253.4	7.34
		105.6	179.7	4.29	194.6	5.12	212.0	5.97	230.4	6.7	237.3	6.90	246.5	7.07	253.4	7.15
	67	31.8	179.7	6.04	194.6	7.01	212.0	8.17	230.4	9.2	237.3	9.42	246.5	9.65	253.4	9.83
		42.4	179.7	5.92	194.6	6.90	212.0	8.04	230.4	9.1	237.3	9.27	246.5	9.50	253.4	9.67
		84.4	179.7	5.44	194.6	6.45	212.0	7.52	230.4	8.5	237.3	8.67	246.5	8.89	253.4	9.05
		105.6	179.7	5.29	194.6	6.32	212.0	7.36	230.4	8.3	237.3	8.51	246.5	8.72	253.4	8.81
	75	31.8	179.7	7.37	194.6	8.56	212.0	9.97	230.4	11.2	237.3	11.50	246.5	11.77	253.4	11.98
		42.4	179.7	7.22	194.6	8.42	212.0	9.81	230.4	11.0	237.3	11.31	246.5	11.58	253.4	11.79
		84.4	179.7	6.64	194.6	7.87	212.0	9.17	230.4	10.3	237.3	10.57	246.5	10.84	253.4	11.04
		105.6	179.7	6.45	194.6	7.70	212.0	8.98	230.4	10.1	237.3	10.37	246.5	10.64	253.4	10.75
	85	31.8	179.7	9.06	194.6	10.52	212.0	12.26	230.4	13.8	237.3	14.14	246.5	14.48	253.4	14.74
		42.4	179.7	8.88	194.6	10.35	212.0	12.06	230.4	13.6	237.3	13.91	246.5	14.25	253.4	14.51
		84.4	179.7	8.16	194.6	9.68	212.0	11.28	230.4	12.7	237.3	13.00	246.5	13.34	253.4	13.58
		105.6	179.7	7.94	194.6	9.47	212.0	11.05	230.4	12.5	237.3	12.76	246.5	13.09	253.4	13.22
	95	31.8	179.7	10.06	194.6	11.70	212.0	13.62	230.4	15.3	237.3	15.70	246.5	16.09	253.4	16.38
		42.4	179.7	9.86	194.6	11.51	212.0	13.40	230.4	15.1	237.3	15.45	246.5	15.83	253.4	16.12
		84.4	179.7	9.07	194.6	10.76	212.0	12.53	230.4	14.1	237.3	14.45	246.5	14.82	253.4	15.08
		105.6	179.7	8.82	194.6	10.53	212.0	12.27	230.4	13.8	237.3	14.18	246.5	14.54	253.4	14.69
	104	31.8	179.7	11.92	194.6	13.84	212.0	16.13	230.4	18.2	237.3	18.60	246.5	19.05	253.4	19.40
		42.4	179.7	11.68	194.6	13.62	212.0	15.87	230.4	17.9	237.3	18.30	246.5	18.75	253.4	19.09
		84.4	179.7	10.74	194.6	12.74	212.0	14.84	230.4	16.7	237.3	17.11	246.5	17.55	253.4	17.86
		105.6	179.7	10.45	194.6	12.47	212.0	14.53	230.4	16.4	237.3	16.79	246.5	17.22	253.4	17.39
	113	31.8	179.7	13.78	194.6	15.99	212.0	18.64	230.4	21.0	237.3	21.50	246.5	22.02	253.4	22.42
		42.4	179.7	13.50	194.6	15.73	212.0	18.34	230.4	20.7	237.3	21.15	246.5	21.67	253.4	22.06
		84.4	179.7	12.41	194.6	14.72	212.0	17.15	230.4	19.3	237.3	19.77	246.5	20.28	253.4	20.64
		105.6	179.7	12.08	194.6	14.41	212.0	16.79	230.4	18.9	237.3	19.40	246.5	19.90	253.4	20.09

TC = Total Cooling Capacity (MBh).
PI = Power input (KW).
Power input (KW) includes compressor(s) and controls.
Test condition based on 25 feet of equivalent refrigerant piping and no change in elevation between indoor unit and water source unit.

LG

Due to our policy of continuous product innovation, some specifications may change without notification.
©LG Electronics U.S.A., Inc., Englewood Cliffs, NJ. All rights reserved. "LG" is a registered trademark of LG Corp.

PERFORMANCE DATA

Cooling Capacity—ARWB288BA2 / ARWN288BA2 (208/230 Volt)

Table 22d: Cooling Capacity ARWB288BA2 / ARWN288BA2

Combination Ratio (%) (Capacity index)	Inlet Water Temperature (°F)	Water Flow Rate (gpm)	Indoor Unit Entering Air Wet Bulb Temperature °F													
			57		61		64		67		70		73		76	
			TC MBh	PI kW	TC MBh	PI kW	TC MBh	PI kW	TC MBh	PI kW	TC MBh	PI kW	TC MBh	PI kW	TC MBh	PI kW
70	50	31.8	157.2	3.00	170.3	3.48	185.5	4.05	201.6	4.6	207.6	4.69	215.7	4.79	221.8	4.89
		42.4	157.2	2.94	170.3	3.42	185.5	3.99	201.6	4.5	207.6	4.61	215.7	4.71	221.8	4.81
		84.4	157.2	2.70	170.3	3.20	185.5	3.74	201.6	4.2	207.6	4.30	215.7	4.42	221.8	4.50
		105.6	157.2	2.64	170.3	3.15	185.5	3.66	201.6	4.1	207.6	4.22	215.7	4.34	221.8	4.38
	59	31.8	157.2	4.07	170.3	4.73	185.5	5.51	201.6	6.2	207.6	6.35	215.7	6.50	221.8	6.63
		42.4	157.2	3.99	170.3	4.65	185.5	5.42	201.6	6.1	207.6	6.25	215.7	6.40	221.8	6.52
		84.4	157.2	3.67	170.3	4.35	185.5	5.07	201.6	5.7	207.6	5.84	215.7	5.99	221.8	6.10
		105.6	157.2	3.57	170.3	4.26	185.5	4.96	201.6	5.6	207.6	5.73	215.7	5.88	221.8	5.94
	67	31.8	157.2	5.02	170.3	5.83	185.5	6.80	201.6	7.7	207.6	7.84	215.7	8.03	221.8	8.17
		42.4	157.2	4.92	170.3	5.74	185.5	6.69	201.6	7.5	207.6	7.71	215.7	7.90	221.8	8.04
		84.4	157.2	4.53	170.3	5.37	185.5	6.25	201.6	7.0	207.6	7.21	215.7	7.39	221.8	7.52
		105.6	157.2	4.40	170.3	5.25	185.5	6.12	201.6	6.9	207.6	7.07	215.7	7.25	221.8	7.33
	75	31.8	157.2	6.12	170.3	7.12	185.5	8.28	201.6	9.3	207.6	9.55	215.7	9.79	221.8	9.96
		42.4	157.2	6.00	170.3	7.00	185.5	8.15	201.6	9.2	207.6	9.40	215.7	9.63	221.8	9.80
		84.4	157.2	5.52	170.3	6.54	185.5	7.62	201.6	8.6	207.6	8.79	215.7	9.01	221.8	9.18
		105.6	157.2	5.37	170.3	6.40	185.5	7.47	201.6	8.4	207.6	8.63	215.7	8.85	221.8	8.94
	85	31.8	157.2	7.53	170.3	8.75	185.5	10.19	201.6	11.5	207.6	11.75	215.7	12.04	221.8	12.25
		42.4	157.2	7.38	170.3	8.61	185.5	10.03	201.6	11.3	207.6	11.56	215.7	11.85	221.8	12.06
		84.4	157.2	6.79	170.3	8.05	185.5	9.38	201.6	10.6	207.6	10.81	215.7	11.09	221.8	11.29
		105.6	157.2	6.60	170.3	7.88	185.5	9.18	201.6	10.4	207.6	10.61	215.7	10.88	221.8	10.99
	95	31.8	157.2	8.37	170.3	9.73	185.5	11.32	201.6	12.8	207.6	13.06	215.7	13.37	221.8	13.62
		42.4	157.2	8.20	170.3	9.57	185.5	11.14	201.6	12.6	207.6	12.85	215.7	13.16	221.8	13.40
		84.4	157.2	7.54	170.3	8.94	185.5	10.42	201.6	11.7	207.6	12.01	215.7	12.32	221.8	12.54
		105.6	157.2	7.33	170.3	8.75	185.5	10.20	201.6	11.5	207.6	11.79	215.7	12.09	221.8	12.21
	104	31.8	157.2	9.91	170.3	11.52	185.5	13.40	201.6	15.1	207.6	15.46	215.7	15.84	221.8	16.13
		42.4	157.2	9.71	170.3	11.33	185.5	13.19	201.6	14.9	207.6	15.21	215.7	15.59	221.8	15.87
		84.4	157.2	8.93	170.3	10.59	185.5	12.34	201.6	13.9	207.6	14.22	215.7	14.59	221.8	14.85
		105.6	157.2	8.68	170.3	10.36	185.5	12.08	201.6	13.6	207.6	13.96	215.7	14.32	221.8	14.46
	113	31.8	157.2	11.45	170.3	13.30	185.5	15.49	201.6	17.5	207.6	17.86	215.7	18.31	221.8	18.64
		42.4	157.2	11.22	170.3	13.09	185.5	15.24	201.6	17.2	207.6	17.57	215.7	18.02	221.8	18.34
		84.4	157.2	10.32	170.3	12.24	185.5	14.26	201.6	16.1	207.6	16.43	215.7	16.86	221.8	17.16
		105.6	157.2	10.03	170.3	11.97	185.5	13.96	201.6	15.7	207.6	16.13	215.7	16.55	221.8	16.71
60	50	31.8	134.8	2.40	146.0	2.77	159.0	3.23	172.8	3.7	178.0	3.74	184.9	3.81	190.1	3.90
		42.4	134.8	2.35	146.0	2.73	159.0	3.18	172.8	3.6	178.0	3.68	184.9	3.75	190.1	3.84
		84.4	134.8	2.14	146.0	2.56	159.0	2.98	172.8	3.4	178.0	3.43	184.9	3.53	190.1	3.58
		105.6	134.8	2.09	146.0	2.49	159.0	2.93	172.8	3.3	178.0	3.37	184.9	3.46	190.1	3.50
	59	31.8	134.8	3.25	146.0	3.77	159.0	4.39	172.8	5.0	178.0	5.06	184.9	5.18	190.1	5.29
		42.4	134.8	3.18	146.0	3.71	159.0	4.32	172.8	4.9	178.0	4.98	184.9	5.10	190.1	5.20
		84.4	134.8	2.92	146.0	3.47	159.0	4.04	172.8	4.6	178.0	4.66	184.9	4.78	190.1	4.86
		105.6	134.8	2.84	146.0	3.39	159.0	3.96	172.8	4.5	178.0	4.57	184.9	4.69	190.1	4.74
	67	31.8	134.8	4.00	146.0	4.66	159.0	5.42	172.8	6.1	178.0	6.24	184.9	6.40	190.1	6.51
		42.4	134.8	3.92	146.0	4.58	159.0	5.33	172.8	6.0	178.0	6.14	184.9	6.30	190.1	6.41
		84.4	134.8	3.61	146.0	4.28	159.0	4.98	172.8	5.6	178.0	5.75	184.9	5.89	190.1	6.00
		105.6	134.8	3.51	146.0	4.19	159.0	4.88	172.8	5.5	178.0	5.64	184.9	5.78	190.1	5.84
	75	31.8	134.8	4.88	146.0	5.67	159.0	6.61	172.8	7.4	178.0	7.61	184.9	7.80	190.1	7.95
		42.4	134.8	4.78	146.0	5.58	159.0	6.50	172.8	7.3	178.0	7.49	184.9	7.68	190.1	7.82
		84.4	134.8	4.40	146.0	5.22	159.0	6.08	172.8	6.8	178.0	7.01	184.9	7.19	190.1	7.32
		105.6	134.8	4.28	146.0	5.11	159.0	5.95	172.8	6.7	178.0	6.88	184.9	7.05	190.1	7.12
	85	31.8	134.8	6.00	146.0	6.97	159.0	8.12	172.8	9.1	178.0	9.37	184.9	9.59	190.1	9.76
		42.4	134.8	5.88	146.0	6.86	159.0	7.99	172.8	9.0	178.0	9.22	184.9	9.44	190.1	9.61
		84.4	134.8	5.41	146.0	6.42	159.0	7.47	172.8	8.4	178.0	8.62	184.9	8.84	190.1	9.00
		105.6	134.8	5.26	146.0	6.28	159.0	7.32	172.8	8.3	178.0	8.46	184.9	8.67	190.1	8.76
	95	31.8	134.8	6.67	146.0	7.76	159.0	9.02	172.8	10.2	178.0	10.41	184.9	10.66	190.1	10.85
		42.4	134.8	6.54	146.0	7.63	159.0	8.88	172.8	10.0	178.0	10.24	184.9	10.49	190.1	10.68
		84.4	134.8	6.01	146.0	7.13	159.0	8.31	172.8	9.4	178.0	9.58	184.9	9.82	190.1	10.00
		105.6	134.8	5.85	146.0	6.98	159.0	8.13	172.8	9.2	178.0	9.40	184.9	9.64	190.1	9.73
	104	31.8	134.8	7.90	146.0	9.18	159.0	10.69	172.8	12.0	178.0	12.33	184.9	12.63	190.1	12.85
		42.4	134.8	7.74	146.0	9.03	159.0	10.52	172.8	11.9	178.0	12.13	184.9	12.43	190.1	12.65
		84.4	134.8	7.12	146.0	8.44	159.0	9.84	172.8	11.1	178.0	11.34	184.9	11.63	190.1	11.84
		105.6	134.8	6.92	146.0	8.26	159.0	9.63	172.8	10.9	178.0	11.13	184.9	11.41	190.1	11.53
	113	31.8	134.8	9.12	146.0	10.60	159.0	12.36	172.8	13.9	178.0	14.25	184.9	14.60	190.1	14.86
		42.4	134.8	8.94	146.0	10.43	159.0	12.16	172.8	13.7	178.0	14.02	184.9	14.37	190.1	14.62
		84.4	134.8	8.23	146.0	9.75	159.0	11.37	172.8	12.8	178.0	13.10	184.9	13.44	190.1	13.68
		105.6	134.8	7.99	146.0	9.54	159.0	11.13	172.8	12.6	178.0	12.86	184.9	13.18	190.1	13.33

TC = Total Cooling Capacity (MBh).
PI = Power input (KW).
Power input (KW) includes compressor(s) and controls.
Test condition based on 25 feet of equivalent refrigerant piping and no change in elevation between indoor unit and water source unit.

Due to our policy of continuous product innovation, some specifications may change without notification.
©LG Electronics U.S.A., Inc., Englewood Cliffs, NJ. All rights reserved. "LG" is a registered trademark of LG Corp.

PERFORMANCE DATA

Cooling Capacity—ARWB288BA2 / ARWN288BA2 (208/230 Volt)

Table 22e: Cooling Capacity ARWB288BA2 / ARWN288BA2

Combination Ratio (%) (Capacity index)	Inlet Water Temperature (°F)	Water Flow Rate (gpm)	Indoor Unit Entering Air Wet Bulb Temperature °F													
			57		61		64		67		70		73		76	
			TC	PI	TC	PI	TC	PI	TC	PI	TC	PI	TC	PI	TC	PI
			MBh	kW	MBh	kW	MBh	kW	MBh	kW	MBh	kW	MBh	kW	MBh	kW
50	50	31.8	112.3	1.79	121.6	2.08	132.5	2.42	144.0	2.7	148.3	2.77	154.1	2.87	158.4	2.89
		42.4	112.3	1.75	121.6	2.05	132.5	2.38	144.0	2.7	148.3	2.73	154.1	2.82	158.4	2.85
		84.4	112.3	1.61	121.6	1.92	132.5	2.21	144.0	2.5	148.3	2.56	154.1	2.63	158.4	2.69
		105.6	112.3	1.56	121.6	1.87	132.5	2.17	144.0	2.5	148.3	2.52	154.1	2.59	158.4	2.60
	59	31.8	112.3	2.42	121.6	2.82	132.5	3.27	144.0	3.7	148.3	3.77	154.1	3.87	158.4	3.93
		42.4	112.3	2.37	121.6	2.77	132.5	3.22	144.0	3.6	148.3	3.71	154.1	3.81	158.4	3.87
		84.4	112.3	2.18	121.6	2.59	132.5	3.01	144.0	3.4	148.3	3.47	154.1	3.56	158.4	3.63
		105.6	112.3	2.12	121.6	2.53	132.5	2.95	144.0	3.3	148.3	3.41	154.1	3.50	158.4	3.53
	67	31.8	112.3	2.98	121.6	3.47	132.5	4.03	144.0	4.5	148.3	4.66	154.1	4.77	158.4	4.86
		42.4	112.3	2.92	121.6	3.41	132.5	3.97	144.0	4.5	148.3	4.58	154.1	4.69	158.4	4.78
		84.4	112.3	2.69	121.6	3.19	132.5	3.72	144.0	4.2	148.3	4.28	154.1	4.39	158.4	4.47
		105.6	112.3	2.62	121.6	3.12	132.5	3.64	144.0	4.1	148.3	4.20	154.1	4.31	158.4	4.36
	75	31.8	112.3	3.64	121.6	4.23	132.5	4.93	144.0	5.6	148.3	5.68	154.1	5.81	158.4	5.93
		42.4	112.3	3.57	121.6	4.16	132.5	4.85	144.0	5.5	148.3	5.59	154.1	5.72	158.4	5.83
		84.4	112.3	3.28	121.6	3.89	132.5	4.53	144.0	5.1	148.3	5.22	154.1	5.36	158.4	5.45
		105.6	112.3	3.19	121.6	3.81	132.5	4.44	144.0	5.0	148.3	5.13	154.1	5.26	158.4	5.31
	85	31.8	112.3	4.48	121.6	5.21	132.5	6.06	144.0	6.8	148.3	6.98	154.1	7.15	158.4	7.29
		42.4	112.3	4.39	121.6	5.12	132.5	5.96	144.0	6.7	148.3	6.87	154.1	7.04	158.4	7.17
		84.4	112.3	4.03	121.6	4.78	132.5	5.57	144.0	6.3	148.3	6.43	154.1	6.59	158.4	6.71
		105.6	112.3	3.92	121.6	4.68	132.5	5.46	144.0	6.2	148.3	6.31	154.1	6.47	158.4	6.53
	95	31.8	112.3	4.97	121.6	5.78	132.5	6.73	144.0	7.6	148.3	7.77	154.1	7.95	158.4	8.09
		42.4	112.3	4.87	121.6	5.69	132.5	6.62	144.0	7.5	148.3	7.64	154.1	7.82	158.4	7.96
		84.4	112.3	4.48	121.6	5.32	132.5	6.19	144.0	7.0	148.3	7.14	154.1	7.32	158.4	7.45
		105.6	112.3	4.36	121.6	5.20	132.5	6.07	144.0	6.8	148.3	7.01	154.1	7.19	158.4	7.26
	104	31.8	112.3	5.89	121.6	6.84	132.5	7.97	144.0	9.0	148.3	9.19	154.1	9.41	158.4	9.58
		42.4	112.3	5.77	121.6	6.73	132.5	7.84	144.0	8.8	148.3	9.04	154.1	9.26	158.4	9.43
		84.4	112.3	5.31	121.6	6.30	132.5	7.33	144.0	8.3	148.3	8.45	154.1	8.67	158.4	8.83
		105.6	112.3	5.16	121.6	6.16	132.5	7.18	144.0	8.1	148.3	8.30	154.1	8.51	158.4	8.60
	113	31.8	112.3	6.80	121.6	7.89	132.5	9.21	144.0	10.4	148.3	10.61	154.1	10.87	158.4	11.07
		42.4	112.3	6.67	121.6	7.77	132.5	9.06	144.0	10.2	148.3	10.44	154.1	10.70	158.4	10.90
		84.4	112.3	6.14	121.6	7.28	132.5	8.47	144.0	9.6	148.3	9.76	154.1	10.02	158.4	10.21
		105.6	112.3	5.96	121.6	7.12	132.5	8.29	144.0	9.4	148.3	9.59	154.1	9.83	158.4	9.94

TC = Total Cooling Capacity (MBh).
PI = Power input (KW).
Power input (KW) includes compressor(s) and controls.
Test condition based on 25 feet of equivalent refrigerant piping and no change in elevation between indoor unit and water source unit.

Due to our policy of continuous product innovation, some specifications may change without notification.
©LG Electronics U.S.A., Inc., Englewood Cliffs, NJ. All rights reserved. "LG" is a registered trademark of LG Corp.

PERFORMANCE DATA

Cooling Capacity—ARWB360BA2 / ARWN360BA2 (208/230 Volt)

Table 23a: Cooling Capacity ARWB360BA2 / ARWN360BA2

Combination Ratio (%) (Capacity index)	Inlet Water Temperature (°F)	Water Flow Rate (gpm)	Indoor Unit Entering Air Wet Bulb Temperature °F													
			57		61		64		67		70		73		76	
			TC	PI	TC	PI	TC	PI	TC	PI	TC	PI	TC	PI	TC	PI
			MBh	kW	MBh	kW	MBh	kW	MBh	kW	MBh	kW	MBh	kW	MBh	kW
130	50	53.0	334.6	7.3	362.4	8.5	394.7	9.9	428.9	11.1	441.8	11.4	459.0	11.7	471.7	11.9
		105.5	334.6	6.7	362.4	7.9	394.7	9.3	428.9	10.4	441.8	10.7	459.0	11.0	471.7	11.2
		132.0	334.6	6.5	362.4	7.8	394.7	9.1	428.9	10.2	441.8	10.5	459.0	10.7	471.7	10.9
	59	53.0	329.2	9.6	356.5	11.2	388.3	13.0	422.0	14.6	434.7	15.0	451.6	15.4	464.2	15.6
		105.5	329.2	8.8	356.5	10.4	388.3	12.2	422.0	13.7	434.7	14.0	451.6	14.4	464.2	14.7
		132.0	329.2	8.6	356.5	10.2	388.3	11.9	422.0	13.4	434.7	13.8	451.6	14.1	464.2	14.4
	67	53.0	324.4	11.6	351.3	13.5	382.6	15.7	415.9	17.7	428.4	18.2	445.0	18.6	457.5	18.9
		105.5	324.4	10.7	351.3	12.6	382.6	14.7	415.9	16.6	428.4	17.0	445.0	17.4	457.5	17.8
		132.0	324.4	10.4	351.3	12.4	382.6	14.4	415.9	16.3	428.4	16.7	445.0	17.1	457.5	17.4
	75	53.0	324.4	14.3	351.3	16.7	382.6	19.4	415.9	21.9	428.4	22.4	445.0	22.9	457.5	23.4
		105.5	324.4	13.1	351.3	15.6	382.6	18.2	415.9	20.4	428.4	21.0	445.0	21.5	457.5	21.9
		132.0	324.4	12.8	351.3	15.3	382.6	17.8	415.9	20.0	428.4	20.6	445.0	21.1	457.5	21.5
	85	53.0	324.4	17.2	351.3	20.0	382.6	23.3	415.9	26.2	428.4	26.9	445.0	27.5	457.5	28.0
		105.5	324.4	15.8	351.3	18.7	382.6	21.8	415.9	24.5	428.4	25.1	445.0	25.8	457.5	26.3
		132.0	324.4	15.3	351.3	18.3	382.6	21.3	415.9	24.1	428.4	24.7	445.0	25.3	457.5	25.7
	95	53.0	292.0	17.3	316.2	20.2	344.4	23.6	374.3	26.5	385.5	27.2	400.5	27.8	411.7	28.3
		105.5	292.0	16.0	316.2	18.9	344.4	22.0	374.3	24.8	385.5	25.4	400.5	26.1	411.7	26.6
		132.0	292.0	15.5	316.2	18.5	344.4	21.6	374.3	24.3	385.5	25.0	400.5	25.6	411.7	26.0
	104	53.0	259.5	18.3	281.1	21.3	306.1	24.9	332.7	28.0	342.7	28.7	356.0	29.4	366.0	29.9
		105.5	259.5	16.8	281.1	20.0	306.1	23.2	332.7	26.2	342.7	26.8	356.0	27.5	366.0	28.1
		132.0	259.5	16.4	281.1	19.5	306.1	22.8	332.7	25.7	342.7	26.3	356.0	27.0	366.0	27.5
	113	53.0	227.0	19.2	246.0	22.5	267.8	26.1	291.1	29.5	299.9	30.2	311.5	30.9	320.3	31.4
		105.5	227.0	17.7	246.0	21.0	267.8	24.5	291.1	27.5	299.9	28.2	311.5	29.0	320.3	29.5
		132.0	227.0	17.2	246.0	20.5	267.8	23.9	291.1	27.0	299.9	27.7	311.5	28.4	320.3	28.9
120	50	53.0	316.7	6.9	342.8	8.0	373.4	9.4	405.8	10.5	418.1	10.8	434.2	11.1	446.6	11.3
		105.5	316.7	6.3	342.8	7.5	373.4	8.8	405.8	9.9	418.1	10.1	434.2	10.4	446.6	10.6
		132.0	316.7	6.2	342.8	7.4	373.4	8.6	405.8	9.7	418.1	9.9	434.2	10.2	446.6	10.3
	59	53.0	313.1	9.1	339.0	10.7	369.2	12.4	401.3	14.0	413.4	14.3	429.4	14.7	441.5	14.9
		105.5	313.1	8.4	339.0	10.0	369.2	11.6	401.3	13.1	413.4	13.4	429.4	13.8	441.5	14.0
		132.0	313.1	8.2	339.0	9.8	369.2	11.4	401.3	12.8	413.4	13.2	429.4	13.5	441.5	13.7
	67	53.0	309.9	11.1	335.6	13.0	365.5	15.1	397.3	17.1	409.2	17.5	425.1	17.9	437.0	18.2
		105.5	309.9	10.3	335.6	12.2	365.5	14.2	397.3	15.9	409.2	16.3	425.1	16.8	437.0	17.1
		132.0	309.9	10.0	335.6	11.9	365.5	13.9	397.3	15.6	409.2	16.0	425.1	16.4	437.0	16.7
	75	53.0	309.9	13.7	335.6	16.0	365.5	18.6	397.3	21.0	409.2	21.5	425.1	22.0	437.0	22.4
		105.5	309.9	12.6	335.6	14.9	365.5	17.4	397.3	19.6	409.2	20.1	425.1	20.6	437.0	21.0
		132.0	309.9	12.3	335.6	14.6	365.5	17.0	397.3	19.2	409.2	19.7	425.1	20.2	437.0	20.5
	85	53.0	309.9	16.6	335.6	19.3	365.5	22.5	397.3	25.3	409.2	25.9	425.1	26.6	437.0	27.1
		105.5	309.9	15.2	335.6	18.1	365.5	21.0	397.3	23.7	409.2	24.3	425.1	24.9	437.0	25.4
		132.0	309.9	14.8	335.6	17.7	365.5	20.6	397.3	23.2	409.2	23.8	425.1	24.4	437.0	24.8
	95	53.0	283.6	17.0	307.1	19.8	334.5	23.1	363.5	26.0	374.5	26.6	389.0	27.2	399.9	27.7
		105.5	283.6	15.6	307.1	18.5	334.5	21.6	363.5	24.3	374.5	24.9	389.0	25.5	399.9	26.0
		132.0	283.6	15.2	307.1	18.1	334.5	21.1	363.5	23.8	374.5	24.4	389.0	25.0	399.9	25.4
	104	53.0	257.3	18.3	278.6	21.3	303.4	24.8	329.8	28.0	339.7	28.6	352.9	29.3	362.8	29.9
		105.5	257.3	16.8	278.6	19.9	303.4	23.2	329.8	26.1	339.7	26.8	352.9	27.5	362.8	28.0
		132.0	257.3	16.3	278.6	19.5	303.4	22.7	329.8	25.6	339.7	26.3	352.9	26.9	362.8	27.3
	113	53.0	231.0	19.6	250.1	22.8	272.3	26.6	296.1	29.9	304.9	30.6	316.8	31.4	325.7	32.0
		105.5	231.0	18.0	250.1	21.3	272.3	24.8	296.1	28.0	304.9	28.7	316.8	29.4	325.7	30.0
		132.0	231.0	17.5	250.1	20.9	272.3	24.3	296.1	27.4	304.9	28.1	316.8	28.8	325.7	29.3

TC = Total Cooling Capacity (MBh).
PI = Power input (KW).
Power input (KW) includes compressor(s) and controls.
Test condition based on 25 feet of equivalent refrigerant piping and no change in elevation between indoor unit and water source unit.

Due to our policy of continuous product innovation, some specifications may change without notification.
©LG Electronics U.S.A., Inc., Englewood Cliffs, NJ. All rights reserved. "LG" is a registered trademark of LG Corp.

PERFORMANCE DATA

Cooling Capacity—ARWB360BA2 / ARWN360BA2 (208/230 Volt)

Table 23b: Cooling Capacity ARWB360BA2 / ARWN360BA2

Combination Ratio (%) (Capacity index)	Inlet Water Temperature (°F)	Water Flow Rate (gpm)	Indoor Unit Entering Air Wet Bulb Temperature °F													
			57		61		64		67		70		73		76	
			TC	PI	TC	PI	TC	PI	TC	PI	TC	PI	TC	PI	TC	PI
			MBh	kW	MBh	kW	MBh	kW	MBh	kW	MBh	kW	MBh	kW	MBh	kW
110	50	53.0	298.7	6.5	323.6	7.6	352.3	8.9	383.1	10.0	394.5	10.2	409.8	10.5	421.2	10.6
		105.5	298.7	6.0	323.6	7.1	352.3	8.3	383.1	9.3	394.5	9.6	409.8	9.8	421.2	10.0
		132.0	298.7	5.8	323.6	7.0	352.3	8.1	383.1	9.1	394.5	9.4	409.8	9.6	421.2	9.7
	59	53.0	296.9	8.7	321.6	10.2	350.2	11.9	380.7	13.4	392.1	13.7	407.3	14.0	418.7	14.3
		105.5	296.9	8.0	321.6	9.5	350.2	11.1	380.7	12.5	392.1	12.8	407.3	13.1	418.7	13.4
		132.0	296.9	7.8	321.6	9.3	350.2	10.9	380.7	12.2	392.1	12.6	407.3	12.9	418.7	13.0
	67	53.0	295.3	10.7	319.8	12.5	348.3	14.5	378.6	16.4	390.0	16.8	405.1	17.2	416.5	17.5
		105.5	295.3	9.8	319.8	11.7	348.3	13.6	378.6	15.3	390.0	15.7	405.1	16.1	416.5	16.4
		132.0	295.3	9.6	319.8	11.4	348.3	13.3	378.6	15.0	390.0	15.4	405.1	15.8	416.5	16.0
	75	53.0	295.3	13.1	319.8	15.3	348.3	17.8	378.6	20.0	390.0	20.5	405.1	21.0	416.5	21.4
		105.5	295.3	12.1	319.8	14.3	348.3	16.6	378.6	18.7	390.0	19.2	405.1	19.7	416.5	20.1
		132.0	295.3	11.7	319.8	14.0	348.3	16.3	378.6	18.4	390.0	18.8	405.1	19.3	416.5	19.6
	85	53.0	295.3	16.0	319.8	18.6	348.3	21.7	378.6	24.4	390.0	25.0	405.1	25.6	416.5	26.1
		105.5	295.3	14.7	319.8	17.4	348.3	20.3	378.6	22.8	390.0	23.4	405.1	24.0	416.5	24.5
		132.0	295.3	14.3	319.8	17.0	348.3	19.9	378.6	22.4	390.0	23.0	405.1	23.6	416.5	23.9
	95	53.0	275.2	16.6	298.0	19.4	324.6	22.6	352.8	25.4	363.4	26.0	377.5	26.7	388.0	27.1
		105.5	275.2	15.3	298.0	18.1	324.6	21.1	352.8	23.8	363.4	24.3	377.5	25.0	388.0	25.4
		132.0	275.2	14.9	298.0	17.7	324.6	20.7	352.8	23.3	363.4	23.9	377.5	24.5	388.0	24.8
	104	53.0	255.0	18.2	276.1	21.3	300.8	24.8	326.9	27.9	336.7	28.6	349.8	29.3	359.6	29.8
		105.5	255.0	16.8	276.1	19.9	300.8	23.2	326.9	26.1	336.7	26.7	349.8	27.4	359.6	27.9
		132.0	255.0	16.3	276.1	19.5	300.8	22.7	326.9	25.6	336.7	26.2	349.8	26.9	359.6	27.2
	113	53.0	234.8	19.9	254.2	23.2	277.0	27.0	301.0	30.4	310.0	31.1	322.1	31.9	331.2	32.5
		105.5	234.8	18.3	254.2	21.7	277.0	25.3	301.0	28.4	310.0	29.1	322.1	29.9	331.2	30.4
		132.0	234.8	17.8	254.2	21.2	277.0	24.7	301.0	27.9	310.0	28.6	322.1	29.3	331.2	29.7
100	50	105.5	280.8	5.6	304.1	6.7	331.2	7.8	360.0	8.8	370.8	9.0	385.2	9.2	396.0	9.4
		132.0	280.8	5.5	304.1	6.5	331.2	7.6	360.0	8.6	370.8	8.8	385.2	9.0	396.0	9.1
		53.0	280.8	8.3	304.1	9.7	331.2	11.3	360.0	12.7	370.8	13.0	385.2	13.3	396.0	13.6
	59	105.5	280.8	7.6	304.1	9.1	331.2	10.6	360.0	11.9	370.8	12.2	385.2	12.5	396.0	12.7
		132.0	280.8	7.4	304.1	8.9	331.2	10.3	360.0	11.7	370.8	12.0	385.2	12.3	396.0	12.4
		53.0	280.8	10.3	304.1	12.0	331.2	13.9	360.0	15.7	370.8	16.1	385.2	16.5	396.0	16.8
	67	105.5	280.8	9.4	304.1	11.2	331.2	13.0	360.0	14.7	370.8	15.0	385.2	15.4	396.0	15.7
		132.0	280.8	9.2	304.1	10.9	331.2	12.8	360.0	14.4	370.8	14.7	385.2	15.1	396.0	15.3
		53.0	280.8	12.5	304.1	14.6	331.2	17.0	360.0	19.1	370.8	19.6	385.2	20.1	396.0	20.4
	75	105.5	280.8	11.5	304.1	13.6	331.2	15.9	360.0	17.9	370.8	18.3	385.2	18.8	396.0	19.1
		132.0	280.8	11.2	304.1	13.3	331.2	15.6	360.0	17.5	370.8	18.0	385.2	18.4	396.0	18.6
		53.0	280.8	15.4	304.1	17.9	331.2	20.9	360.0	23.5	370.8	24.1	385.2	24.7	396.0	25.1
	85	105.5	280.8	14.1	304.1	16.8	331.2	19.5	360.0	22.0	370.8	22.5	385.2	23.1	396.0	23.5
		132.0	280.8	13.8	304.1	16.4	331.2	19.1	360.0	21.6	370.8	22.1	385.2	22.7	396.0	22.9
		53.0	266.8	16.2	288.9	18.9	314.6	22.1	342.0	24.8	352.3	25.4	365.9	26.1	376.2	26.5
	95	105.5	266.8	14.9	288.9	17.7	314.6	20.6	342.0	23.2	352.3	23.8	365.9	24.4	376.2	24.8
		132.0	266.8	14.5	288.9	17.3	314.6	20.2	342.0	22.8	352.3	23.3	365.9	23.9	376.2	24.2
		53.0	252.7	18.2	273.7	21.2	298.1	24.7	324.0	27.9	333.7	28.5	346.7	29.2	356.4	29.8
	104	105.5	252.7	16.8	273.7	19.9	298.1	23.1	324.0	26.1	333.7	26.7	346.7	27.4	356.4	27.9
		132.0	252.7	16.3	273.7	19.4	298.1	22.7	324.0	25.5	333.7	26.2	346.7	26.9	356.4	27.1
		53.0	238.6	20.2	258.5	23.6	281.6	27.4	306.0	30.9	315.1	31.6	327.5	32.4	336.6	33.0
	113	105.5	238.6	18.6	258.5	22.0	281.6	25.7	306.0	28.9	315.1	29.6	327.5	30.3	336.6	30.9
		132.0	238.6	18.1	258.5	21.6	281.6	25.1	306.0	28.3	315.1	29.0	327.5	29.8	336.6	30.1
		84.4	191.0	14.86	206.7	17.62	225.3	20.52	244.8	23.1	252.2	23.66	261.8	24.27	269.2	24.70

TC = Total Cooling Capacity (MBh).
PI = Power input (KW).
Power input (KW) includes compressor(s) and controls.
Test condition based on 25 feet of equivalent refrigerant piping and no change in elevation between indoor unit and water source unit.

Due to our policy of continuous product innovation, some specifications may change without notification.
©LG Electronics U.S.A., Inc., Englewood Cliffs, NJ. All rights reserved. "LG" is a registered trademark of LG Corp.

PERFORMANCE DATA

Cooling Capacity—ARWB360BA2 / ARWN360BA2 (208/230 Volt)

Table 23c: Cooling Capacity ARWB360BA2 / ARWN360BA2

Combination Ratio (%) (Capacity index)	Inlet Water Temperature (°F)	Water Flow Rate (gpm)	Indoor Unit Entering Air Wet Bulb Temperature °F													
			57		61		64		67		70		73		76	
			TC	PI	TC	PI	TC	PI	TC	PI	TC	PI	TC	PI	TC	PI
			MBh	kW	MBh	kW	MBh	kW	MBh	kW	MBh	kW	MBh	kW	MBh	kW
90	50	53.0	252.7	5.3	273.7	6.2	298.1	7.2	324.0	8.1	333.7	8.3	346.7	8.5	356.4	8.6
		105.5	252.7	4.8	273.7	5.8	298.1	6.7	324.0	7.6	333.7	7.7	346.7	7.9	356.4	8.1
		132.0	252.7	4.7	273.7	5.6	298.1	6.6	324.0	7.4	333.7	7.6	346.7	7.8	356.4	7.8
	59	53.0	252.7	7.2	273.7	8.4	298.1	9.7	324.0	11.0	333.7	11.2	346.7	11.5	356.4	11.7
		105.5	252.7	6.6	273.7	7.8	298.1	9.1	324.0	10.2	333.7	10.5	346.7	10.8	356.4	10.9
		132.0	252.7	6.4	273.7	7.6	298.1	8.9	324.0	10.0	333.7	10.3	346.7	10.6	356.4	10.7
	67	53.0	252.7	8.8	273.7	10.3	298.1	12.0	324.0	13.5	333.7	13.8	346.7	14.2	356.4	14.4
		105.5	252.7	8.1	273.7	9.6	298.1	11.2	324.0	12.6	333.7	12.9	346.7	13.3	356.4	13.5
		132.0	252.7	7.9	273.7	9.4	298.1	11.0	324.0	12.4	333.7	12.7	346.7	13.0	356.4	13.1
	75	53.0	252.7	10.8	273.7	12.6	298.1	14.6	324.0	16.5	333.7	16.9	346.7	17.3	356.4	17.6
		105.5	252.7	9.9	273.7	11.7	298.1	13.7	324.0	15.4	333.7	15.8	346.7	16.2	356.4	16.5
		132.0	252.7	9.6	273.7	11.5	298.1	13.4	324.0	15.1	333.7	15.5	346.7	15.9	356.4	16.0
	85	53.0	252.7	13.2	273.7	15.4	298.1	18.0	324.0	20.3	333.7	20.7	346.7	21.3	356.4	21.6
		105.5	252.7	12.2	273.7	14.4	298.1	16.8	324.0	18.9	333.7	19.4	346.7	19.9	356.4	20.2
		132.0	252.7	11.8	273.7	14.1	298.1	16.5	324.0	18.6	333.7	19.0	346.7	19.5	356.4	19.7
	95	53.0	245.7	14.3	266.1	16.7	289.8	19.4	315.0	21.9	324.5	22.4	337.1	22.9	346.5	23.3
		105.5	245.7	13.1	266.1	15.6	289.8	18.1	315.0	20.4	324.5	20.9	337.1	21.5	346.5	21.8
		132.0	245.7	12.8	266.1	15.2	289.8	17.8	315.0	20.0	324.5	20.5	337.1	21.1	346.5	21.3
	104	53.0	238.7	16.4	258.5	19.1	281.5	22.3	306.0	25.1	315.2	25.7	327.4	26.3	336.6	26.8
		105.5	238.7	15.1	258.5	17.9	281.5	20.8	306.0	23.5	315.2	24.0	327.4	24.6	336.6	25.1
		132.0	238.7	14.7	258.5	17.5	281.5	20.4	306.0	23.0	315.2	23.6	327.4	24.2	336.6	24.4
	113	53.0	231.7	18.5	250.9	21.6	273.2	25.2	297.0	28.4	305.9	29.0	317.7	29.7	326.7	30.3
		105.5	231.7	17.1	250.9	20.2	273.2	23.5	297.0	26.5	305.9	27.1	317.7	27.8	326.7	28.3
		132.0	231.7	16.6	250.9	19.8	273.2	23.1	297.0	26.0	305.9	26.6	317.7	27.3	326.7	27.6
80	50	53.0	224.6	4.4	243.3	5.2	265.0	6.0	288.0	6.8	296.6	6.9	308.2	7.1	316.8	7.2
		105.5	224.6	4.1	243.3	4.8	265.0	5.6	288.0	6.3	296.6	6.5	308.2	6.6	316.8	6.8
		132.0	224.6	3.9	243.3	4.7	265.0	5.5	288.0	6.2	296.6	6.4	308.2	6.5	316.8	6.6
	59	53.0	224.6	6.0	243.3	7.0	265.0	8.2	288.0	9.2	296.6	9.4	308.2	9.6	316.8	9.8
		105.5	224.6	5.5	243.3	6.5	265.0	7.6	288.0	8.6	296.6	8.8	308.2	9.0	316.8	9.2
		132.0	224.6	5.4	243.3	6.4	265.0	7.5	288.0	8.4	296.6	8.6	308.2	8.8	316.8	8.9
	67	53.0	224.6	7.4	243.3	8.6	265.0	10.1	288.0	11.3	296.6	11.6	308.2	11.9	316.8	12.1
		105.5	224.6	6.8	243.3	8.1	265.0	9.4	288.0	10.6	296.6	10.8	308.2	11.1	316.8	11.3
		132.0	224.6	6.6	243.3	7.9	265.0	9.2	288.0	10.4	296.6	10.6	308.2	10.9	316.8	11.0
	75	53.0	224.6	9.0	243.3	10.5	265.0	12.3	288.0	13.8	296.6	14.1	308.2	14.5	316.8	14.7
		105.5	224.6	8.3	243.3	9.8	265.0	11.5	288.0	12.9	296.6	13.2	308.2	13.6	316.8	13.8
		132.0	224.6	8.1	243.3	9.6	265.0	11.2	288.0	12.7	296.6	13.0	308.2	13.3	316.8	13.4
	85	53.0	224.6	11.1	243.3	12.9	265.0	15.1	288.0	17.0	296.6	17.4	308.2	17.8	316.8	18.1
		105.5	224.6	10.2	243.3	12.1	265.0	14.1	288.0	15.9	296.6	16.3	308.2	16.7	316.8	17.0
		132.0	224.6	9.9	243.3	11.8	265.0	13.8	288.0	15.6	296.6	16.0	308.2	16.4	316.8	16.5
	95	53.0	224.6	12.3	243.3	14.4	265.0	16.8	288.0	18.9	296.6	19.3	308.2	19.8	316.8	20.2
		105.5	224.6	11.3	243.3	13.5	265.0	15.7	288.0	17.6	296.6	18.1	308.2	18.5	316.8	18.9
		132.0	224.6	11.0	243.3	13.2	265.0	15.3	288.0	17.3	296.6	17.7	308.2	18.2	316.8	18.4
	104	53.0	224.6	14.6	243.3	17.0	265.0	19.8	288.0	22.3	296.6	22.9	308.2	23.4	316.8	23.9
		105.5	224.6	13.4	243.3	15.9	265.0	18.6	288.0	20.9	296.6	21.4	308.2	21.9	316.8	22.3
		132.0	224.6	13.1	243.3	15.6	265.0	18.2	288.0	20.5	296.6	21.0	308.2	21.5	316.8	21.7
	113	53.0	224.6	16.9	243.3	19.7	265.0	22.9	288.0	25.8	296.6	26.4	308.2	27.1	316.8	27.6
		105.5	224.6	15.5	243.3	18.4	265.0	21.4	288.0	24.1	296.6	24.7	308.2	25.3	316.8	25.8
		132.0	224.6	15.1	243.3	18.0	265.0	21.0	288.0	23.7	296.6	24.3	308.2	24.9	316.8	25.1

TC = Total Cooling Capacity (MBh).
PI = Power input (KW).
Power input (KW) includes compressor(s) and controls.
Test condition based on 25 feet of equivalent refrigerant piping and no change in elevation between indoor unit and water source unit.

Due to our policy of continuous product innovation, some specifications may change without notification.
©LG Electronics U.S.A., Inc., Englewood Cliffs, NJ. All rights reserved. "LG" is a registered trademark of LG Corp.

PERFORMANCE DATA

Cooling Capacity—ARWB360BA2 / ARWN360BA2 (208/230 Volt)

Table 23d: Cooling Capacity ARWB360BA2 / ARWN360BA2

Combination Ratio (%) (Capacity index)	Inlet Water Temperature (°F)	Water Flow Rate (gpm)	Indoor Unit Entering Air Wet Bulb Temperature °F													
			57		61		64		67		70		73		76	
			TC	PI	TC	PI	TC	PI	TC	PI	TC	PI	TC	PI	TC	PI
			MBh	kW	MBh	kW	MBh	kW	MBh	kW	MBh	kW	MBh	kW	MBh	kW
70	50	53.0	196.6	3.7	212.9	4.3	231.8	5.0	252.0	5.6	259.6	5.8	269.6	5.9	277.2	6.0
		105.5	196.6	3.4	212.9	4.0	231.8	4.7	252.0	5.3	259.6	5.4	269.6	5.5	277.2	5.6
		132.0	196.6	3.3	212.9	3.9	231.8	4.6	252.0	5.1	259.6	5.3	269.6	5.4	277.2	5.5
	59	53.0	196.6	5.0	212.9	5.8	231.8	6.8	252.0	7.6	259.6	7.8	269.6	8.0	277.2	8.2
		105.5	196.6	4.6	212.9	5.4	231.8	6.3	252.0	7.1	259.6	7.3	269.6	7.5	277.2	7.6
		132.0	196.6	4.5	212.9	5.3	231.8	6.2	252.0	7.0	259.6	7.2	269.6	7.4	277.2	7.4
	67	53.0	196.6	6.2	212.9	7.2	231.8	8.4	252.0	9.4	259.6	9.6	269.6	9.9	277.2	10.1
		105.5	196.6	5.7	212.9	6.7	231.8	7.8	252.0	8.8	259.6	9.0	269.6	9.2	277.2	9.4
		132.0	196.6	5.5	212.9	6.6	231.8	7.7	252.0	8.6	259.6	8.8	269.6	9.1	277.2	9.2
	75	53.0	196.6	7.5	212.9	8.8	231.8	10.2	252.0	11.5	259.6	11.8	269.6	12.0	277.2	12.3
		105.5	196.6	6.9	212.9	8.2	231.8	9.5	252.0	10.7	259.6	11.0	269.6	11.3	277.2	11.5
		132.0	196.6	6.7	212.9	8.0	231.8	9.3	252.0	10.5	259.6	10.8	269.6	11.1	277.2	11.2
	85	53.0	196.6	9.2	212.9	10.8	231.8	12.5	252.0	14.1	259.6	14.5	269.6	14.8	277.2	15.1
		105.5	196.6	8.5	212.9	10.1	231.8	11.7	252.0	13.2	259.6	13.5	269.6	13.9	277.2	14.1
		132.0	196.6	8.3	212.9	9.9	231.8	11.5	252.0	12.9	259.6	13.3	269.6	13.6	277.2	13.7
	95	53.0	196.6	10.3	212.9	12.0	231.8	13.9	252.0	15.7	259.6	16.1	269.6	16.5	277.2	16.8
		105.5	196.6	9.4	212.9	11.2	231.8	13.0	252.0	14.7	259.6	15.0	269.6	15.4	277.2	15.7
		132.0	196.6	9.2	212.9	10.9	231.8	12.8	252.0	14.4	259.6	14.7	269.6	15.1	277.2	15.3
	104	53.0	196.6	12.1	212.9	14.2	231.8	16.5	252.0	18.6	259.6	19.0	269.6	19.5	277.2	19.8
		105.5	196.6	11.2	212.9	13.2	231.8	15.4	252.0	17.4	259.6	17.8	269.6	18.2	277.2	18.6
		132.0	196.6	10.9	212.9	13.0	231.8	15.1	252.0	17.0	259.6	17.5	269.6	17.9	277.2	18.1
	113	53.0	196.6	14.0	212.9	16.4	231.8	19.1	252.0	21.5	259.6	22.0	269.6	22.5	277.2	22.9
		105.5	196.6	12.9	212.9	15.3	231.8	17.8	252.0	20.1	259.6	20.6	269.6	21.1	277.2	21.4
		132.0	196.6	12.6	212.9	15.0	231.8	17.5	252.0	19.7	259.6	20.2	269.6	20.7	277.2	20.9
60	50	53.0	168.5	2.9	182.5	3.4	198.7	4.0	216.0	4.5	222.5	4.6	231.1	4.7	237.6	4.8
		105.5	168.5	2.7	182.5	3.2	198.7	3.7	216.0	4.2	222.5	4.3	231.1	4.4	237.6	4.5
		132.0	168.5	2.6	182.5	3.1	198.7	3.7	216.0	4.1	222.5	4.2	231.1	4.3	237.6	4.4
	59	53.0	168.5	4.0	182.5	4.6	198.7	5.4	216.0	6.1	222.5	6.2	231.1	6.4	237.6	6.5
		105.5	168.5	3.7	182.5	4.3	198.7	5.1	216.0	5.7	222.5	5.8	231.1	6.0	237.6	6.1
		132.0	168.5	3.6	182.5	4.2	198.7	5.0	216.0	5.6	222.5	5.7	231.1	5.9	237.6	5.9
	67	53.0	168.5	4.9	182.5	5.7	198.7	6.7	216.0	7.5	222.5	7.7	231.1	7.9	237.6	8.0
		105.5	168.5	4.5	182.5	5.4	198.7	6.2	216.0	7.0	222.5	7.2	231.1	7.4	237.6	7.5
		132.0	168.5	4.4	182.5	5.2	198.7	6.1	216.0	6.9	222.5	7.1	231.1	7.2	237.6	7.3
	75	53.0	168.5	6.0	182.5	7.0	198.7	8.1	216.0	9.2	222.5	9.4	231.1	9.6	237.6	9.8
		105.5	168.5	5.5	182.5	6.5	198.7	7.6	216.0	8.6	222.5	8.8	231.1	9.0	237.6	9.1
		132.0	168.5	5.4	182.5	6.4	198.7	7.4	216.0	8.4	222.5	8.6	231.1	8.8	237.6	8.9
	85	53.0	168.5	7.4	182.5	8.6	198.7	10.0	216.0	11.3	222.5	11.5	231.1	11.8	237.6	12.0
		105.5	168.5	6.8	182.5	8.0	198.7	9.3	216.0	10.5	222.5	10.8	231.1	11.1	237.6	11.3
		132.0	168.5	6.6	182.5	7.9	198.7	9.2	216.0	10.3	222.5	10.6	231.1	10.8	237.6	11.0
	95	53.0	168.5	8.2	182.5	9.5	198.7	11.1	216.0	12.5	222.5	12.8	231.1	13.1	237.6	13.4
		105.5	168.5	7.5	182.5	8.9	198.7	10.4	216.0	11.7	222.5	12.0	231.1	12.3	237.6	12.5
		132.0	168.5	7.3	182.5	8.7	198.7	10.2	216.0	11.5	222.5	11.8	231.1	12.1	237.6	12.2
	104	53.0	168.5	9.7	182.5	11.3	198.7	13.2	216.0	14.8	222.5	15.2	231.1	15.5	237.6	15.8
		105.5	168.5	8.9	182.5	10.6	198.7	12.3	216.0	13.8	222.5	14.2	231.1	14.5	237.6	14.8
		132.0	168.5	8.7	182.5	10.3	198.7	12.0	216.0	13.6	222.5	13.9	231.1	14.3	237.6	14.4
	113	53.0	168.5	11.2	182.5	13.1	198.7	15.2	216.0	17.1	222.5	17.5	231.1	17.9	237.6	18.3
		105.5	168.5	10.3	182.5	12.2	198.7	14.2	216.0	16.0	222.5	16.4	231.1	16.8	237.6	17.1
		132.0	168.5	10.0	182.5	11.9	198.7	13.9	216.0	15.7	222.5	16.1	231.1	16.5	237.6	16.7

TC = Total Cooling Capacity (MBh).
PI = Power input (KW).
Power input (KW) includes compressor(s) and controls.
Test condition based on 25 feet of equivalent refrigerant piping and no change in elevation between indoor unit and water source unit.

Due to our policy of continuous product innovation, some specifications may change without notification.
©LG Electronics U.S.A., Inc., Englewood Cliffs, NJ. All rights reserved. "LG" is a registered trademark of LG Corp.

PERFORMANCE DATA

Cooling Capacity—ARWB360BA2 / ARWN360BA2 (208/230 Volt)

Table 23e: Cooling Capacity ARWB360BA2 / ARWN360BA2

Combination Ratio (%) (Capacity index)	Inlet Water Temperature (°F)	Water Flow Rate (gpm)	Indoor Unit Entering Air Wet Bulb Temperature °F													
			57		61		64		67		70		73		76	
			TC	PI	TC	PI	TC	PI	TC	PI	TC	PI	TC	PI	TC	PI
			MBh	kW	MBh	kW	MBh	kW	MBh	kW	MBh	kW	MBh	kW	MBh	kW
50	50	53.0	140.4	2.2	152.0	2.6	165.6	3.0	180.0	3.4	185.4	3.4	192.6	3.5	198.0	3.6
		105.5	140.4	2.0	152.0	2.4	165.6	2.8	180.0	3.1	185.4	3.2	192.6	3.3	198.0	3.3
		132.0	140.4	2.0	152.0	2.3	165.6	2.7	180.0	3.1	185.4	3.1	192.6	3.2	198.0	3.3
	59	53.0	140.4	3.0	152.0	3.5	165.6	4.0	180.0	4.5	185.4	4.6	192.6	4.8	198.0	4.8
		105.5	140.4	2.7	152.0	3.2	165.6	3.8	180.0	4.2	185.4	4.3	192.6	4.5	198.0	4.5
		132.0	140.4	2.7	152.0	3.2	165.6	3.7	180.0	4.2	185.4	4.3	192.6	4.4	198.0	4.4
	67	53.0	140.4	3.7	152.0	4.3	165.6	5.0	180.0	5.6	185.4	5.7	192.6	5.9	198.0	6.0
		105.5	140.4	3.4	152.0	4.0	165.6	4.6	180.0	5.2	185.4	5.4	192.6	5.5	198.0	5.6
		132.0	140.4	3.3	152.0	3.9	165.6	4.6	180.0	5.1	185.4	5.3	192.6	5.4	198.0	5.4
	75	53.0	140.4	4.5	152.0	5.2	165.6	6.1	180.0	6.8	185.4	7.0	192.6	7.2	198.0	7.3
		105.5	140.4	4.1	152.0	4.9	165.6	5.7	180.0	6.4	185.4	6.5	192.6	6.7	198.0	6.8
		132.0	140.4	4.0	152.0	4.8	165.6	5.6	180.0	6.3	185.4	6.4	192.6	6.6	198.0	6.6
	85	53.0	140.4	5.5	152.0	6.4	165.6	7.5	180.0	8.4	185.4	8.6	192.6	8.8	198.0	9.0
		105.5	140.4	5.0	152.0	6.0	165.6	7.0	180.0	7.8	185.4	8.0	192.6	8.2	198.0	8.4
		132.0	140.4	4.9	152.0	5.9	165.6	6.8	180.0	7.7	185.4	7.9	192.6	8.1	198.0	8.2
	95	53.0	140.4	6.1	152.0	7.1	165.6	8.3	180.0	9.3	185.4	9.5	192.6	9.8	198.0	10.0
		105.5	140.4	5.6	152.0	6.7	165.6	7.7	180.0	8.7	185.4	8.9	192.6	9.2	198.0	9.3
		132.0	140.4	5.5	152.0	6.5	165.6	7.6	180.0	8.6	185.4	8.8	192.6	9.0	198.0	9.1
	104	53.0	140.4	7.2	152.0	8.4	165.6	9.8	180.0	11.0	185.4	11.3	192.6	11.6	198.0	11.8
		105.5	140.4	6.6	152.0	7.9	165.6	9.2	180.0	10.3	185.4	10.6	192.6	10.8	198.0	11.0
		132.0	140.4	6.5	152.0	7.7	165.6	9.0	180.0	10.1	185.4	10.4	192.6	10.6	198.0	10.7
	113	53.0	140.4	8.4	152.0	9.7	165.6	11.3	180.0	12.8	185.4	13.1	192.6	13.4	198.0	13.6
		105.5	140.4	7.7	152.0	9.1	165.6	10.6	180.0	11.9	185.4	12.2	192.6	12.5	198.0	12.7
		132.0	140.4	7.5	152.0	8.9	165.6	10.4	180.0	11.7	185.4	12.0	192.6	12.3	198.0	12.4

TC = Total Cooling Capacity (MBh).
PI = Power input (KW).
Power input (KW) includes compressor(s) and controls.
Test condition based on 25 feet of equivalent refrigerant piping and no change in elevation between indoor unit and water source unit.

Due to our policy of continuous product innovation, some specifications may change without notification.
©LG Electronics U.S.A., Inc., Englewood Cliffs, NJ. All rights reserved. "LG" is a registered trademark of LG Corp.

Table 24a: Cooling Capacity ARWB432BA2 / ARWN432BA2

Combination Ratio (%) (Capacity index)	Inlet Water Temperature (°F)	Water Flow Rate (gpm)	Indoor Unit Entering Air Wet Bulb Temperature °F													
			57		61		64		67		70		73		76	
			TC MBh	PI kW	TC MBh	PI kW	TC MBh	PI kW	TC MBh	PI kW	TC MBh	PI kW	TC MBh	PI kW	TC MBh	PI kW
130	50	63.6	401.4	8.7	434.8	10.2	473.4	11.9	514.6	13.4	530.0	13.7	550.8	14.0	566.2	14.3
		126.6	401.4	8.0	434.8	9.5	473.4	11.1	514.6	12.5	530.0	12.8	550.8	13.2	566.2	13.4
		158.4	401.4	7.8	434.8	9.3	473.4	10.9	514.6	12.3	530.0	12.6	550.8	12.9	566.2	13.1
	59	63.6	395.0	11.5	427.8	13.4	465.9	15.6	506.4	17.6	521.6	18.0	541.9	18.4	557.1	18.8
		126.6	395.0	10.6	427.8	12.5	465.9	14.6	506.4	16.4	521.6	16.8	541.9	17.3	557.1	17.6
		158.4	395.0	10.3	427.8	12.3	465.9	14.3	506.4	16.1	521.6	16.5	541.9	16.9	557.1	17.2
	67	63.6	389.3	13.9	421.6	16.2	459.2	18.9	499.1	21.3	514.1	21.8	534.0	22.3	549.0	22.7
		126.6	389.3	12.8	421.6	15.2	459.2	17.7	499.1	19.9	514.1	20.4	534.0	20.9	549.0	21.4
		158.4	389.3	12.4	421.6	14.8	459.2	17.3	499.1	19.5	514.1	20.0	534.0	20.5	549.0	20.9
	75	63.6	389.3	17.2	421.6	20.0	459.2	23.3	499.1	26.2	514.1	26.9	534.0	27.5	549.0	28.0
		126.6	389.3	15.8	421.6	18.7	459.2	21.8	499.1	24.5	514.1	25.1	534.0	25.8	549.0	26.3
		158.4	389.3	15.3	421.6	18.3	459.2	21.3	499.1	24.1	514.1	24.7	534.0	25.3	549.0	25.7
	85	63.6	389.3	20.6	421.6	24.0	459.2	28.0	499.1	31.5	514.1	32.2	534.0	33.0	549.0	33.6
		126.6	389.3	18.9	421.6	22.4	459.2	26.1	499.1	29.4	514.1	30.2	534.0	31.0	549.0	31.6
		158.4	389.3	18.4	421.6	22.0	459.2	25.6	499.1	28.9	514.1	29.6	534.0	30.4	549.0	30.9
	95	63.6	350.4	20.8	379.4	24.3	413.2	28.3	449.2	31.8	462.7	32.6	480.6	33.4	494.1	34.0
		126.6	350.4	19.1	379.4	22.7	413.2	26.4	449.2	29.8	462.7	30.5	480.6	31.3	494.1	32.0
		158.4	350.4	18.6	379.4	22.2	413.2	25.9	449.2	29.2	462.7	29.9	480.6	30.7	494.1	31.2
	104	63.6	311.4	22.0	337.3	25.6	367.3	29.8	399.3	33.6	411.2	34.4	427.2	35.2	439.2	35.9
		126.6	311.4	20.2	337.3	23.9	367.3	27.9	399.3	31.4	411.2	32.2	427.2	33.0	439.2	33.7
		158.4	311.4	19.6	337.3	23.4	367.3	27.3	399.3	30.8	411.2	31.6	427.2	32.4	439.2	32.9
	113	63.6	272.4	23.1	295.2	26.9	321.4	31.4	349.4	35.3	359.7	36.2	373.8	37.1	384.3	37.7
		126.6	272.4	21.2	295.2	25.2	321.4	29.3	349.4	33.0	359.7	33.9	373.8	34.8	384.3	35.5
		158.4	272.4	20.7	295.2	24.7	321.4	28.7	349.4	32.4	359.7	33.2	373.8	34.1	384.3	34.7
120	50	63.6	380.1	8.3	411.4	9.7	448.2	11.2	487.1	12.7	501.8	13.0	521.2	13.3	535.9	13.5
		126.6	380.1	7.6	411.4	9.0	448.2	10.5	487.1	11.8	501.8	12.1	521.2	12.5	535.9	12.7
		158.4	380.1	7.4	411.4	8.8	448.2	10.3	487.1	11.6	501.8	11.9	521.2	12.2	535.9	12.4
	59	63.6	375.7	11.0	406.8	12.8	443.1	14.9	481.6	16.8	496.1	17.2	515.3	17.6	529.8	17.9
		126.6	375.7	10.1	406.8	12.0	443.1	13.9	481.6	15.7	496.1	16.1	515.3	16.5	529.8	16.8
		158.4	375.7	9.8	406.8	11.7	443.1	13.7	481.6	15.4	496.1	15.8	515.3	16.2	529.8	16.4
	67	63.6	371.8	13.4	402.7	15.6	438.6	18.2	476.7	20.5	491.0	21.0	510.1	21.5	524.4	21.9
		126.6	371.8	12.3	402.7	14.6	438.6	17.0	476.7	19.1	491.0	19.6	510.1	20.1	524.4	20.5
		158.4	371.8	12.0	402.7	14.3	438.6	16.6	476.7	18.8	491.0	19.2	510.1	19.7	524.4	20.0
	75	63.6	371.8	16.4	402.7	19.2	438.6	22.3	476.7	25.1	491.0	25.7	510.1	26.4	524.4	26.9
		126.6	371.8	15.1	402.7	17.9	438.6	20.9	476.7	23.5	491.0	24.1	510.1	24.7	524.4	25.2
		158.4	371.8	14.7	402.7	17.5	438.6	20.5	476.7	23.1	491.0	23.6	510.1	24.2	524.4	24.6
	85	63.6	371.8	19.9	402.7	23.2	438.6	27.0	476.7	30.4	491.0	31.1	510.1	31.9	524.4	32.5
		126.6	371.8	18.3	402.7	21.7	438.6	25.2	476.7	28.4	491.0	29.1	510.1	29.9	524.4	30.5
		158.4	371.8	17.8	402.7	21.2	438.6	24.7	476.7	27.9	491.0	28.6	510.1	29.3	524.4	29.8
	95	63.6	340.3	20.4	368.5	23.8	401.4	27.7	436.3	31.2	449.3	31.9	466.8	32.7	479.9	33.3
		126.6	340.3	18.7	368.5	22.2	401.4	25.9	436.3	29.1	449.3	29.9	466.8	30.6	479.9	31.2
		158.4	340.3	18.2	368.5	21.7	401.4	25.3	436.3	28.6	449.3	29.3	466.8	30.0	479.9	30.5
	104	63.6	308.7	21.9	334.3	25.6	364.1	29.8	395.8	33.5	407.7	34.3	423.5	35.2	435.4	35.8
		126.6	308.7	20.2	334.3	23.9	364.1	27.9	395.8	31.4	407.7	32.1	423.5	33.0	435.4	33.6
		158.4	308.7	19.6	334.3	23.4	364.1	27.3	395.8	30.7	407.7	31.5	423.5	32.3	435.4	32.8
	113	63.6	277.1	23.5	300.1	27.4	326.8	31.9	355.3	35.9	366.1	36.8	380.2	37.7	390.9	38.4
		126.6	277.1	21.6	300.1	25.6	326.8	29.8	355.3	33.6	366.1	34.4	380.2	35.3	390.9	36.0
		158.4	277.1	21.0	300.1	25.0	326.8	29.2	355.3	32.9	366.1	33.8	380.2	34.6	390.9	35.1

TC = Total Cooling Capacity (MBh).
PI = Power input (KW).
Power input (KW) includes compressor(s) and controls.
Test condition based on 25 feet of equivalent refrigerant piping and no change in elevation between indoor unit and water source unit.

Due to our policy of continuous product innovation, some specifications may change without notification.
©LG Electronics U.S.A., Inc., Englewood Cliffs, NJ. All rights reserved. "LG" is a registered trademark of LG Corp.

PERFORMANCE DATA

Cooling Capacity—ARWB432BA2 / ARWN432BA2 (208/230 Volt)

Table 24b: Cooling Capacity ARWB432BA2 / ARWN432BA2

Combination Ratio (%) (Capacity index)	Inlet Water Temperature (°F)	Water Flow Rate (gpm)	Indoor Unit Entering Air Wet Bulb Temperature °F													
			57		61		64		67		70		73		76	
			TC	PI	TC	PI	TC	PI	TC	PI	TC	PI	TC	PI	TC	PI
			MBh	kW	MBh	kW	MBh	kW	MBh	kW	MBh	kW	MBh	kW	MBh	kW
110	50	63.6	358.4	7.8	388.3	9.1	422.9	10.6	459.5	12.0	473.3	12.2	491.7	12.5	505.5	12.8
		126.6	358.4	7.2	388.3	8.5	422.9	9.9	459.5	11.2	473.3	11.5	491.7	11.8	505.5	12.0
		158.4	358.4	7.0	388.3	8.3	422.9	9.7	459.5	11.0	473.3	11.2	491.7	11.5	505.5	11.7
	59	63.6	356.3	10.5	385.9	12.2	420.3	14.2	456.8	16.0	470.5	16.4	488.8	16.8	502.5	17.1
		126.6	356.3	9.6	385.9	11.4	420.3	13.3	456.8	15.0	470.5	15.4	488.8	15.8	502.5	16.0
		158.4	356.3	9.4	385.9	11.2	420.3	13.0	456.8	14.7	470.5	15.1	488.8	15.5	502.5	15.6
	67	63.6	354.4	12.8	383.8	15.0	418.0	17.4	454.4	19.6	468.0	20.1	486.2	20.6	499.8	21.0
		126.6	354.4	11.8	383.8	14.0	418.0	16.3	454.4	18.4	468.0	18.8	486.2	19.3	499.8	19.7
		158.4	354.4	11.5	383.8	13.7	418.0	16.0	454.4	18.0	468.0	18.5	486.2	18.9	499.8	19.2
	75	63.6	354.4	15.7	383.8	18.3	418.0	21.4	454.4	24.1	468.0	24.6	486.2	25.2	499.8	25.7
		126.6	354.4	14.5	383.8	17.1	418.0	20.0	454.4	22.5	468.0	23.0	486.2	23.6	499.8	24.1
		158.4	354.4	14.1	383.8	16.8	418.0	19.6	454.4	22.1	468.0	22.6	486.2	23.2	499.8	23.5
	85	63.6	354.4	19.2	383.8	22.4	418.0	26.0	454.4	29.3	468.0	30.0	486.2	30.8	499.8	31.3
		126.6	354.4	17.6	383.8	20.9	418.0	24.3	454.4	27.4	468.0	28.1	486.2	28.8	499.8	29.4
		158.4	354.4	17.1	383.8	20.5	418.0	23.8	454.4	26.9	468.0	27.6	486.2	28.3	499.8	28.6
	95	63.6	330.2	19.9	357.6	23.2	389.5	27.1	423.3	30.5	436.0	31.2	453.0	32.0	465.7	32.6
		126.6	330.2	18.3	357.6	21.7	389.5	25.3	423.3	28.5	436.0	29.2	453.0	30.0	465.7	30.5
		158.4	330.2	17.8	357.6	21.3	389.5	24.8	423.3	27.9	436.0	28.7	453.0	29.4	465.7	29.8
	104	63.6	306.0	21.9	331.4	25.5	360.9	29.7	392.3	33.5	404.1	34.3	419.8	35.1	431.5	35.8
		126.6	306.0	20.1	331.4	23.9	360.9	27.8	392.3	31.3	404.1	32.1	419.8	32.9	431.5	33.5
		158.4	306.0	19.6	331.4	23.4	360.9	27.2	392.3	30.7	404.1	31.5	419.8	32.3	431.5	32.7
	113	63.6	281.8	23.9	305.2	27.8	332.3	32.4	361.3	36.5	372.2	37.4	386.6	38.3	397.3	39.0
		126.6	281.8	21.9	305.2	26.0	332.3	30.3	361.3	34.1	372.2	35.0	386.6	35.9	397.3	36.5
		158.4	281.8	21.3	305.2	25.5	332.3	29.7	361.3	33.5	372.2	34.3	386.6	35.2	397.3	35.6
100	50	63.6	337.0	7.4	364.9	8.6	397.4	10.0	432.0	11.3	445.0	11.5	462.2	11.8	475.2	12.0
		126.6	337.0	6.8	364.9	8.0	397.4	9.3	432.0	10.5	445.0	10.8	462.2	11.0	475.2	11.2
		158.4	337.0	6.6	364.9	7.9	397.4	9.1	432.0	10.3	445.0	10.6	462.2	10.9	475.2	10.9
	59	63.6	337.0	10.0	364.9	11.6	397.4	13.6	432.0	15.3	445.0	15.6	462.2	16.0	475.2	16.3
		126.6	337.0	9.2	364.9	10.9	397.4	12.7	432.0	14.3	445.0	14.6	462.2	15.0	475.2	15.3
		158.4	337.0	8.9	364.9	10.7	397.4	12.4	432.0	14.0	445.0	14.3	462.2	14.7	475.2	14.9
	67	63.6	337.0	12.3	364.9	14.4	397.4	16.7	432.0	18.8	445.0	19.3	462.2	19.8	475.2	20.1
		126.6	337.0	11.3	364.9	13.4	397.4	15.6	432.0	17.6	445.0	18.0	462.2	18.5	475.2	18.8
		158.4	337.0	11.0	364.9	13.1	397.4	15.3	432.0	17.3	445.0	17.7	462.2	18.1	475.2	18.3
	75	63.6	337.0	15.0	364.9	17.5	397.4	20.4	432.0	23.0	445.0	23.5	462.2	24.1	475.2	24.5
		126.6	337.0	13.8	364.9	16.4	397.4	19.1	432.0	21.5	445.0	22.0	462.2	22.5	475.2	22.9
		158.4	337.0	13.4	364.9	16.0	397.4	18.7	432.0	21.0	445.0	21.6	462.2	22.1	475.2	22.3
	85	63.6	337.0	18.5	364.9	21.5	397.4	25.1	432.0	28.2	445.0	28.9	462.2	29.6	475.2	30.2
		126.6	337.0	17.0	364.9	20.1	397.4	23.4	432.0	26.4	445.0	27.0	462.2	27.7	475.2	28.2
		158.4	337.0	16.5	364.9	19.7	397.4	23.0	432.0	25.9	445.0	26.5	462.2	27.2	475.2	27.5
	95	63.6	320.1	19.5	346.7	22.7	377.6	26.5	410.4	29.8	422.7	30.5	439.1	31.3	451.4	31.8
		126.6	320.1	17.9	346.7	21.2	377.6	24.8	410.4	27.9	422.7	28.5	439.1	29.3	451.4	29.8
		158.4	320.1	17.4	346.7	20.8	377.6	24.2	410.4	27.3	422.7	28.0	439.1	28.7	451.4	29.0
	104	63.6	303.3	21.9	328.4	25.5	357.7	29.7	388.8	33.4	400.5	34.2	416.0	35.1	427.7	35.7
		126.6	303.3	20.1	328.4	23.8	357.7	27.8	388.8	31.3	400.5	32.0	416.0	32.8	427.7	33.4
		158.4	303.3	19.5	328.4	23.3	357.7	27.2	388.8	30.7	400.5	31.4	416.0	32.2	427.7	32.5
	113	63.6	286.5	24.2	310.1	28.3	337.8	32.9	367.2	37.1	378.3	38.0	392.9	38.9	404.0	39.6
		126.6	286.5	22.3	310.1	26.4	337.8	30.8	367.2	34.7	378.3	35.5	392.9	36.4	404.0	37.1
		158.4	286.5	21.7	310.1	25.9	337.8	30.1	367.2	34.0	378.3	34.8	392.9	35.7	404.0	36.1

TC = Total Cooling Capacity (MBh).
PI = Power input (KW).
Power input (KW) includes compressor(s) and controls.
Test condition based on 25 feet of equivalent refrigerant piping and no change in elevation between indoor unit and water source unit.

Due to our policy of continuous product innovation, some specifications may change without notification.
©LG Electronics U.S.A., Inc., Englewood Cliffs, NJ. All rights reserved. "LG" is a registered trademark of LG Corp.

PERFORMANCE DATA

Cooling Capacity—ARWB432BA2 / ARWN432BA2 (208/230 Volt)

Table 24c: Cooling Capacity ARWB432BA2 / ARWN432BA2

Combination Ratio (%) (Capacity index)	Inlet Water Temperature (°F)	Water Flow Rate (gpm)	Indoor Unit Entering Air Wet Bulb Temperature °F													
			57		61		64		67		70		73		76	
			TC	PI	TC	PI	TC	PI	TC	PI	TC	PI	TC	PI	TC	PI
			MBh	kW	MBh	kW	MBh	kW	MBh	kW	MBh	kW	MBh	kW	MBh	kW
90	50	63.6	303.3	6.3	328.4	7.4	357.7	8.6	388.8	9.7	400.5	9.9	416.0	10.2	427.7	10.4
		126.6	303.3	5.8	328.4	6.9	357.7	8.1	388.8	9.1	400.5	9.3	416.0	9.5	427.7	9.7
		158.4	303.3	5.7	328.4	6.8	357.7	7.9	388.8	8.9	400.5	9.1	416.0	9.3	427.7	9.4
	59	63.6	303.3	8.6	328.4	10.0	357.7	11.7	388.8	13.1	400.5	13.5	416.0	13.8	427.7	14.0
		126.6	303.3	7.9	328.4	9.4	357.7	10.9	388.8	12.3	400.5	12.6	416.0	12.9	427.7	13.1
		158.4	303.3	7.7	328.4	9.2	357.7	10.7	388.8	12.0	400.5	12.3	416.0	12.7	427.7	12.8
	67	63.6	303.3	10.6	328.4	12.4	357.7	14.4	388.8	16.2	400.5	16.6	416.0	17.0	427.7	17.3
		126.6	303.3	9.7	328.4	11.6	357.7	13.5	388.8	15.2	400.5	15.5	416.0	15.9	427.7	16.2
		158.4	303.3	9.5	328.4	11.3	357.7	13.2	388.8	14.9	400.5	15.2	416.0	15.6	427.7	15.8
	75	63.6	303.3	12.9	328.4	15.1	357.7	17.6	388.8	19.8	400.5	20.2	416.0	20.7	427.7	21.1
		126.6	303.3	11.9	328.4	14.1	357.7	16.4	388.8	18.5	400.5	18.9	416.0	19.4	427.7	19.8
		158.4	303.3	11.6	328.4	13.8	357.7	16.1	388.8	18.1	400.5	18.6	416.0	19.0	427.7	19.2
	85	63.6	303.3	15.9	328.4	18.5	357.7	21.6	388.8	24.3	400.5	24.9	416.0	25.5	427.7	26.0
		126.6	303.3	14.6	328.4	17.3	357.7	20.2	388.8	22.7	400.5	23.3	416.0	23.9	427.7	24.3
		158.4	303.3	14.2	328.4	17.0	357.7	19.8	388.8	22.3	400.5	22.8	416.0	23.4	427.7	23.7
	95	63.6	294.8	17.1	319.3	20.0	347.8	23.3	378.0	26.2	389.3	26.9	404.5	27.5	415.8	28.0
		126.6	294.8	15.8	319.3	18.7	347.8	21.8	378.0	24.5	389.3	25.1	404.5	25.7	415.8	26.2
		158.4	294.8	15.3	319.3	18.3	347.8	21.3	378.0	24.0	389.3	24.6	404.5	25.3	415.8	25.5
	104	63.6	286.4	19.7	310.2	23.0	337.8	26.8	367.2	30.1	378.2	30.8	392.9	31.6	403.9	32.2
		126.6	286.4	18.1	310.2	21.5	337.8	25.0	367.2	28.2	378.2	28.8	392.9	29.6	403.9	30.1
		158.4	286.4	17.6	310.2	21.0	337.8	24.5	367.2	27.6	378.2	28.3	392.9	29.0	403.9	29.3
	113	63.6	278.0	22.2	301.1	25.9	327.8	30.2	356.4	34.0	367.1	34.8	381.3	35.7	392.0	36.3
		126.6	278.0	20.5	301.1	24.3	327.8	28.3	356.4	31.8	367.1	32.6	381.3	33.4	392.0	34.0
		158.4	278.0	19.9	301.1	23.7	327.8	27.7	356.4	31.2	367.1	32.0	381.3	32.8	392.0	33.1
80	50	63.6	269.6	5.3	291.9	6.2	318.0	7.2	345.6	8.1	356.0	8.3	369.8	8.5	380.2	8.7
		126.6	269.6	4.9	291.9	5.8	318.0	6.7	345.6	7.6	356.0	7.8	369.8	8.0	380.2	8.1
		158.4	269.6	4.8	291.9	5.7	318.0	6.6	345.6	7.5	356.0	7.6	369.8	7.8	380.2	7.9
	59	63.6	269.6	7.2	291.9	8.4	318.0	9.8	345.6	11.0	356.0	11.3	369.8	11.6	380.2	11.8
		126.6	269.6	6.6	291.9	7.9	318.0	9.1	345.6	10.3	356.0	10.5	369.8	10.8	380.2	11.0
		158.4	269.6	6.4	291.9	7.7	318.0	9.0	345.6	10.1	356.0	10.4	369.8	10.6	380.2	10.7
	67	63.6	269.6	8.9	291.9	10.4	318.0	12.1	345.6	13.6	356.0	13.9	369.8	14.3	380.2	14.5
		126.6	269.6	8.2	291.9	9.7	318.0	11.3	345.6	12.7	356.0	13.0	369.8	13.3	380.2	13.6
		158.4	269.6	7.9	291.9	9.5	318.0	11.1	345.6	12.5	356.0	12.8	369.8	13.1	380.2	13.2
	75	63.6	269.6	10.8	291.9	12.6	318.0	14.7	345.6	16.6	356.0	17.0	369.8	17.4	380.2	17.7
		126.6	269.6	10.0	291.9	11.8	318.0	13.8	345.6	15.5	356.0	15.9	369.8	16.3	380.2	16.6
		158.4	269.6	9.7	291.9	11.6	318.0	13.5	345.6	15.2	356.0	15.6	369.8	16.0	380.2	16.1
	85	63.6	269.6	13.3	291.9	15.5	318.0	18.1	345.6	20.4	356.0	20.9	369.8	21.4	380.2	21.8
		126.6	269.6	12.3	291.9	14.5	318.0	16.9	345.6	19.1	356.0	19.5	369.8	20.0	380.2	20.4
		158.4	269.6	11.9	291.9	14.2	318.0	16.6	345.6	18.7	356.0	19.1	369.8	19.6	380.2	19.8
	95	63.6	269.6	14.8	291.9	17.3	318.0	20.1	345.6	22.6	356.0	23.2	369.8	23.8	380.2	24.2
		126.6	269.6	13.6	291.9	16.1	318.0	18.8	345.6	21.2	356.0	21.7	369.8	22.2	380.2	22.6
		158.4	269.6	13.2	291.9	15.8	318.0	18.4	345.6	20.8	356.0	21.3	369.8	21.8	380.2	22.0
	104	63.6	269.6	17.5	291.9	20.4	318.0	23.8	345.6	26.8	356.0	27.5	369.8	28.1	380.2	28.6
		126.6	269.6	16.1	291.9	19.1	318.0	22.3	345.6	25.1	356.0	25.7	369.8	26.3	380.2	26.8
		158.4	269.6	15.7	291.9	18.7	318.0	21.8	345.6	24.6	356.0	25.2	369.8	25.8	380.2	26.1
	113	63.6	269.6	20.2	291.9	23.6	318.0	27.5	345.6	31.0	356.0	31.7	369.8	32.5	380.2	33.1
		126.6	269.6	18.6	291.9	22.1	318.0	25.7	345.6	29.0	356.0	29.7	369.8	30.4	380.2	31.0
		158.4	269.6	18.1	291.9	21.6	318.0	25.2	345.6	28.4	356.0	29.1	369.8	29.9	380.2	30.2

TC = Total Cooling Capacity (MBh).
PI = Power input (KW).
Power input (KW) includes compressor(s) and controls.
Test condition based on 25 feet of equivalent refrigerant piping and no change in elevation between indoor unit and water source unit.

Due to our policy of continuous product innovation, some specifications may change without notification.
©LG Electronics U.S.A., Inc., Englewood Cliffs, NJ. All rights reserved. "LG" is a registered trademark of LG Corp.

PERFORMANCE DATA

Cooling Capacity—ARWB432BA2 / ARWN432BA2 (208/230 Volt)

Table 24d: Cooling Capacity ARWB432BA2 / ARWN432BA2

Combination Ratio (%) (Capacity index)	Inlet Water Temperature (°F)	Water Flow Rate (gpm)	Indoor Unit Entering Air Wet Bulb Temperature °F													
			57		61		64		67		70		73		76	
			TC	PI	TC	PI	TC	PI	TC	PI	TC	PI	TC	PI	TC	PI
			MBh	kW	MBh	kW	MBh	kW	MBh	kW	MBh	kW	MBh	kW	MBh	kW
70	50	63.6	235.9	4.4	255.4	5.1	278.2	6.0	302.4	6.8	311.5	6.9	323.6	7.1	332.6	7.2
		126.6	235.9	4.0	255.4	4.8	278.2	5.6	302.4	6.3	311.5	6.5	323.6	6.6	332.6	6.7
		158.4	235.9	3.9	255.4	4.7	278.2	5.5	302.4	6.2	311.5	6.3	323.6	6.5	332.6	6.6
	59	63.6	235.9	6.0	255.4	7.0	278.2	8.1	302.4	9.2	311.5	9.4	323.6	9.6	332.6	9.8
		126.6	235.9	5.5	255.4	6.5	278.2	7.6	302.4	8.6	311.5	8.8	323.6	9.0	332.6	9.2
		158.4	235.9	5.4	255.4	6.4	278.2	7.5	302.4	8.4	311.5	8.6	323.6	8.8	332.6	8.9
	67	63.6	235.9	7.4	255.4	8.6	278.2	10.0	302.4	11.3	311.5	11.6	323.6	11.9	332.6	12.1
		126.6	235.9	6.8	255.4	8.1	278.2	9.4	302.4	10.6	311.5	10.8	323.6	11.1	332.6	11.3
		158.4	235.9	6.6	255.4	7.9	278.2	9.2	302.4	10.4	311.5	10.6	323.6	10.9	332.6	11.0
	75	63.6	235.9	9.0	255.4	10.5	278.2	12.2	302.4	13.8	311.5	14.1	323.6	14.5	332.6	14.7
		126.6	235.9	8.3	255.4	9.8	278.2	11.4	302.4	12.9	311.5	13.2	323.6	13.5	332.6	13.8
		158.4	235.9	8.1	255.4	9.6	278.2	11.2	302.4	12.6	311.5	12.9	323.6	13.3	332.6	13.4
	85	63.6	235.9	11.1	255.4	12.9	278.2	15.0	302.4	16.9	311.5	17.3	323.6	17.8	332.6	18.1
		126.6	235.9	10.2	255.4	12.1	278.2	14.1	302.4	15.8	311.5	16.2	323.6	16.6	332.6	16.9
		158.4	235.9	9.9	255.4	11.8	278.2	13.8	302.4	15.5	311.5	15.9	323.6	16.3	332.6	16.5
	95	63.6	235.9	12.3	255.4	14.4	278.2	16.7	302.4	18.8	311.5	19.3	323.6	19.7	332.6	20.1
		126.6	235.9	11.3	255.4	13.4	278.2	15.6	302.4	17.6	311.5	18.0	323.6	18.5	332.6	18.8
		158.4	235.9	11.0	255.4	13.1	278.2	15.3	302.4	17.3	311.5	17.7	323.6	18.1	332.6	18.3
	104	63.6	235.9	14.6	255.4	17.0	278.2	19.8	302.4	22.3	311.5	22.8	323.6	23.4	332.6	23.8
		126.6	235.9	13.4	255.4	15.9	278.2	18.5	302.4	20.8	311.5	21.3	323.6	21.9	332.6	22.3
		158.4	235.9	13.0	255.4	15.6	278.2	18.1	302.4	20.4	311.5	20.9	323.6	21.5	332.6	21.7
	113	63.6	235.9	16.8	255.4	19.6	278.2	22.9	302.4	25.8	311.5	26.4	323.6	27.0	332.6	27.5
		126.6	235.9	15.5	255.4	18.4	278.2	21.4	302.4	24.1	311.5	24.7	323.6	25.3	332.6	25.8
		158.4	235.9	15.1	255.4	18.0	278.2	21.0	302.4	23.6	311.5	24.2	323.6	24.8	332.6	25.1
60	50	63.6	202.2	3.5	218.9	4.1	238.5	4.8	259.2	5.4	267.0	5.5	277.3	5.7	285.1	5.8
		126.6	202.2	3.2	218.9	3.8	238.5	4.5	259.2	5.0	267.0	5.2	277.3	5.3	285.1	5.4
		158.4	202.2	3.2	218.9	3.8	238.5	4.4	259.2	4.9	267.0	5.1	277.3	5.2	285.1	5.2
	59	63.6	202.2	4.8	218.9	5.6	238.5	6.5	259.2	7.3	267.0	7.5	277.3	7.7	285.1	7.8
		126.6	202.2	4.4	218.9	5.2	238.5	6.1	259.2	6.8	267.0	7.0	277.3	7.2	285.1	7.3
		158.4	202.2	4.3	218.9	5.1	238.5	5.9	259.2	6.7	267.0	6.9	277.3	7.0	285.1	7.1
	67	63.6	202.2	5.9	218.9	6.9	238.5	8.0	259.2	9.0	267.0	9.2	277.3	9.4	285.1	9.6
		126.6	202.2	5.4	218.9	6.4	238.5	7.5	259.2	8.4	267.0	8.6	277.3	8.8	285.1	9.0
		158.4	202.2	5.3	218.9	6.3	238.5	7.3	259.2	8.3	267.0	8.5	277.3	8.7	285.1	8.8
	75	63.6	202.2	7.2	218.9	8.4	238.5	9.8	259.2	11.0	267.0	11.2	277.3	11.5	285.1	11.7
		126.6	202.2	6.6	218.9	7.8	238.5	9.1	259.2	10.3	267.0	10.5	277.3	10.8	285.1	11.0
		158.4	202.2	6.4	218.9	7.7	238.5	8.9	259.2	10.1	267.0	10.3	277.3	10.6	285.1	10.7
	85	63.6	202.2	8.8	218.9	10.3	238.5	12.0	259.2	13.5	267.0	13.8	277.3	14.2	285.1	14.4
		126.6	202.2	8.1	218.9	9.6	238.5	11.2	259.2	12.6	267.0	12.9	277.3	13.3	285.1	13.5
		158.4	202.2	7.9	218.9	9.4	238.5	11.0	259.2	12.4	267.0	12.7	277.3	13.0	285.1	13.1
	95	63.6	202.2	9.8	218.9	11.4	238.5	13.3	259.2	15.0	267.0	15.4	277.3	15.7	285.1	16.0
		126.6	202.2	9.0	218.9	10.7	238.5	12.5	259.2	14.0	267.0	14.4	277.3	14.7	285.1	15.0
		158.4	202.2	8.8	218.9	10.5	238.5	12.2	259.2	13.8	267.0	14.1	277.3	14.5	285.1	14.6
	104	63.6	202.2	11.6	218.9	13.6	238.5	15.8	259.2	17.8	267.0	18.2	277.3	18.6	285.1	19.0
		126.6	202.2	10.7	218.9	12.7	238.5	14.8	259.2	16.6	267.0	17.0	277.3	17.4	285.1	17.8
		158.4	202.2	10.4	218.9	12.4	238.5	14.5	259.2	16.3	267.0	16.7	277.3	17.1	285.1	17.3
	113	63.6	202.2	13.4	218.9	15.7	238.5	18.2	259.2	20.5	267.0	21.0	277.3	21.5	285.1	21.9
		126.6	202.2	12.3	218.9	14.7	238.5	17.0	259.2	19.2	267.0	19.7	277.3	20.2	285.1	20.5
		158.4	202.2	12.0	218.9	14.3	238.5	16.7	259.2	18.8	267.0	19.3	277.3	19.8	285.1	20.0

TC = Total Cooling Capacity (MBh).
PI = Power input (KW).
Power input (KW) includes compressor(s) and controls.
Test condition based on 25 feet of equivalent refrigerant piping and no change in elevation between indoor unit and water source unit.

Due to our policy of continuous product innovation, some specifications may change without notification.
©LG Electronics U.S.A., Inc., Englewood Cliffs, NJ. All rights reserved. "LG" is a registered trademark of LG Corp.

PERFORMANCE DATA

Cooling Capacity—ARWB432BA2 / ARWN432BA2 (208/230 Volt)

Table 24e: Cooling Capacity ARWB432BA2 / ARWN432BA2

Combination Ratio (%) (Capacity index)	Inlet Water Temperature (°F)	Water Flow Rate (gpm)	Indoor Unit Entering Air Wet Bulb Temperature °F													
			57		61		64		67		70		73		76	
			TC	PI	TC	PI	TC	PI	TC	PI	TC	PI	TC	PI	TC	PI
			MBh	kW	MBh	kW	MBh	kW	MBh	kW	MBh	kW	MBh	kW	MBh	kW
50	50	63.6	168.5	2.6	182.5	3.1	198.7	3.6	216.0	4.0	222.5	4.1	231.1	4.2	237.6	4.3
		126.6	168.5	2.4	182.5	2.9	198.7	3.3	216.0	3.8	222.5	3.8	231.1	3.9	237.6	4.0
		158.4	168.5	2.3	182.5	2.8	198.7	3.3	216.0	3.7	222.5	3.8	231.1	3.9	237.6	3.9
	59	63.6	168.5	3.6	182.5	4.2	198.7	4.8	216.0	5.4	222.5	5.6	231.1	5.7	237.6	5.8
		126.6	168.5	3.3	182.5	3.9	198.7	4.5	216.0	5.1	222.5	5.2	231.1	5.3	237.6	5.4
		158.4	168.5	3.2	182.5	3.8	198.7	4.4	216.0	5.0	222.5	5.1	231.1	5.2	237.6	5.3
	67	63.6	168.5	4.4	182.5	5.1	198.7	6.0	216.0	6.7	222.5	6.9	231.1	7.0	237.6	7.2
		126.6	168.5	4.0	182.5	4.8	198.7	5.6	216.0	6.3	222.5	6.4	231.1	6.6	237.6	6.7
		158.4	168.5	3.9	182.5	4.7	198.7	5.5	216.0	6.2	222.5	6.3	231.1	6.5	237.6	6.5
	75	63.6	168.5	5.4	182.5	6.2	198.7	7.3	216.0	8.2	222.5	8.4	231.1	8.6	237.6	8.7
		126.6	168.5	4.9	182.5	5.8	198.7	6.8	216.0	7.7	222.5	7.8	231.1	8.0	237.6	8.2
		158.4	168.5	4.8	182.5	5.7	198.7	6.7	216.0	7.5	222.5	7.7	231.1	7.9	237.6	8.0
	85	63.6	168.5	6.6	182.5	7.7	198.7	8.9	216.0	10.1	222.5	10.3	231.1	10.6	237.6	10.8
		126.6	168.5	6.1	182.5	7.2	198.7	8.4	216.0	9.4	222.5	9.6	231.1	9.9	237.6	10.1
		158.4	168.5	5.9	182.5	7.0	198.7	8.2	216.0	9.2	222.5	9.5	231.1	9.7	237.6	9.8
	95	63.6	168.5	7.3	182.5	8.5	198.7	9.9	216.0	11.2	222.5	11.5	231.1	11.7	237.6	12.0
		126.6	168.5	6.7	182.5	8.0	198.7	9.3	216.0	10.5	222.5	10.7	231.1	11.0	237.6	11.2
		158.4	168.5	6.5	182.5	7.8	198.7	9.1	216.0	10.3	222.5	10.5	231.1	10.8	237.6	10.9
	104	63.6	168.5	8.7	182.5	10.1	198.7	11.8	216.0	13.3	222.5	13.6	231.1	13.9	237.6	14.2
		126.6	168.5	8.0	182.5	9.4	198.7	11.0	216.0	12.4	222.5	12.7	231.1	13.0	237.6	13.2
		158.4	168.5	7.7	182.5	9.2	198.7	10.8	216.0	12.1	222.5	12.5	231.1	12.8	237.6	12.9
	113	63.6	168.5	10.0	182.5	11.7	198.7	13.6	216.0	15.3	222.5	15.7	231.1	16.1	237.6	16.4
		126.6	168.5	9.2	182.5	10.9	198.7	12.7	216.0	14.3	222.5	14.7	231.1	15.0	237.6	15.3
		158.4	168.5	8.9	182.5	10.7	198.7	12.4	216.0	14.0	222.5	14.4	231.1	14.7	237.6	14.9

TC = Total Cooling Capacity (MBh).
PI = Power input (KW).
Power input (KW) includes compressor(s) and controls.
Test condition based on 25 feet of equivalent refrigerant piping and no change in elevation between indoor unit and water source unit.

Due to our policy of continuous product innovation, some specifications may change without notification.
©LG Electronics U.S.A., Inc., Englewood Cliffs, NJ. All rights reserved. "LG" is a registered trademark of LG Corp.

PERFORMANCE DATA

Heating Capacity—ARWB096DA2 / ARWN096DA2 (460 Volt)

Table 25a: Heating Capacity ARWB096DA2 / ARWN096DA2

Combination Ratio (%) (Capacity index)	Inlet Water Temperature (°F)	Water Flow Rate (gpm)	Indoor Unit Entering Air Wet Bulb Temperature °F											
			61		65		68		70		72		75	
			TC MBh	PI kW	TC MBh	PI kW	TC MBh	PI kW	TC MBh	PI kW	TC MBh	PI kW	TC MBh	PI kW
130	23	13.2	52.6	6.18	52.2	5.83	51.9	5.44	51.2	5.28	51.8	5.14	50.4	4.61
		25.4	59.5	6.60	59.0	6.27	58.7	5.90	57.9	5.73	58.6	5.57	57.1	5.00
		31.7	65.8	7.02	65.2	6.70	64.8	6.36	64.0	6.19	64.8	6.01	63.1	5.39
	32	13.2	91.4	8.33	89.3	8.08	87.4	7.82	85.5	7.60	85.8	7.39	81.9	6.62
		25.4	93.6	8.42	91.3	8.16	89.4	7.91	87.5	7.69	87.8	7.47	83.9	6.70
		31.7	95.0	8.42	92.7	8.16	90.8	7.91	88.8	7.69	89.1	7.47	85.1	6.70
	41	13.2	131.3	8.97	129.1	8.75	126.2	8.53	123.0	8.29	119.7	8.06	113.1	7.22
		25.4	133.1	9.13	130.0	8.91	126.3	8.70	123.0	8.46	119.7	8.22	113.1	7.37
		31.7	133.9	9.19	130.4	8.97	126.3	8.76	123.0	8.52	119.7	8.28	113.1	7.42
	50	13.2	131.8	8.11	129.5	7.86	126.3	7.72	123.0	7.53	119.7	7.27	113.1	6.56
		25.4	134.9	8.05	131.9	7.89	128.3	7.78	125.0	7.52	121.5	7.25	114.9	6.54
		31.7	135.6	8.16	132.8	8.00	129.1	7.81	125.6	7.55	122.3	7.37	115.6	6.85
	59	13.2	132.3	7.25	129.9	6.98	126.3	6.92	123.0	6.77	119.7	6.48	113.1	5.90
		25.4	136.6	6.96	133.8	6.86	130.3	6.86	127.0	6.57	123.3	6.28	116.7	5.70
		31.7	137.3	7.13	135.1	7.02	131.9	6.86	128.3	6.57	125.0	6.46	118.1	6.28
	68	13.2	137.3	6.67	134.8	6.40	131.2	6.26	127.6	6.09	124.0	5.97	116.7	5.70
		25.4	141.6	6.48	139.1	6.38	135.2	6.24	131.6	6.19	128.3	6.13	121.0	5.51
		31.7	142.2	6.48	140.1	6.38	136.8	6.28	132.9	6.19	129.3	6.13	122.0	5.86
	77	13.2	143.8	6.38	140.1	6.21	136.8	6.09	134.2	5.99	131.2	5.90	123.7	5.51
		25.4	143.8	6.28	140.1	6.17	136.8	5.99	134.2	5.90	131.2	5.80	123.7	5.41
		31.7	143.8	6.19	140.1	6.01	136.8	5.90	134.2	5.80	131.2	5.70	123.7	5.32
	86	13.2	143.8	6.19	140.1	5.92	136.8	5.84	134.2	5.70	131.2	5.61	123.7	5.22
		25.4	143.8	5.99	140.1	5.88	136.8	5.70	134.2	5.61	131.2	5.41	123.7	5.03
		31.7	143.8	5.90	140.1	5.72	136.8	5.61	134.2	5.51	131.2	5.41	123.7	5.03
	95	13.2	143.8	5.90	140.1	5.72	136.8	5.61	134.2	5.41	131.2	5.22	123.7	4.83
		25.4	143.8	5.70	140.1	5.59	136.8	5.51	134.2	5.32	131.2	5.12	123.7	4.64
		31.7	143.8	5.70	140.1	5.53	136.8	5.41	134.2	5.22	131.2	5.03	123.7	4.64
	104	13.2	143.8	5.70	140.1	5.53	136.8	5.41	134.2	5.22	131.2	5.03	123.7	4.54
		25.4	143.8	5.51	140.1	5.39	136.8	5.22	134.2	5.03	131.2	4.83	123.7	4.35
		31.7	143.8	5.41	140.1	5.30	136.8	5.22	134.2	5.03	131.2	4.83	123.7	4.35
	113	13.2	143.8	5.51	140.1	5.34	136.8	5.22	134.2	5.03	131.2	4.83	123.7	4.25
		25.4	143.8	5.32	140.1	5.20	136.8	4.93	134.2	4.74	131.2	4.54	123.7	4.06
		31.7	143.8	5.12	140.1	5.07	136.8	5.03	134.2	4.83	131.2	4.64	123.7	4.06
120	23	13.2	50.0	6.18	49.6	5.83	49.3	5.44	48.7	5.21	49.1	5.06	47.8	4.53
		25.4	56.6	6.60	56.1	6.27	55.8	5.90	55.1	5.65	55.6	5.49	54.1	4.92
		31.7	62.5	7.02	62.0	6.70	61.6	6.36	60.9	6.10	61.4	5.92	59.7	5.30
	32	13.2	86.9	8.33	84.8	8.08	83.0	7.82	81.3	7.49	81.3	7.28	77.6	6.51
		25.4	88.9	8.42	86.8	8.16	85.0	7.91	83.2	7.58	83.2	7.36	79.5	6.59
		31.7	90.3	8.42	88.2	8.16	86.3	7.91	84.5	7.58	84.4	7.36	80.7	6.59
	41	13.2	125.0	8.97	122.9	8.75	120.0	8.53	117.1	8.17	113.4	7.94	107.2	7.11
		25.4	126.8	9.13	123.8	8.91	120.0	8.70	117.1	8.34	113.4	8.10	107.2	7.25
		31.7	127.5	9.19	123.1	8.97	120.0	8.76	117.1	8.40	113.4	8.16	107.2	7.30
	50	13.2	125.6	8.05	123.2	7.83	120.0	7.67	117.1	7.42	113.4	7.16	107.2	6.45
		25.4	127.9	8.16	125.2	7.95	121.3	7.78	118.4	7.46	114.6	7.14	108.3	6.48
		31.7	128.6	8.13	124.8	7.95	121.8	7.81	118.9	7.49	115.1	7.17	108.8	6.70
	59	13.2	126.1	7.13	123.6	6.92	120.0	6.81	117.1	6.67	113.4	6.38	107.2	5.80
		25.4	129.0	7.19	126.6	6.98	122.7	6.86	119.7	6.57	115.7	6.19	109.5	5.70
		31.7	129.7	7.08	126.5	6.92	123.7	6.86	120.7	6.57	116.7	6.19	110.5	6.09
	68	13.2	129.7	6.40	127.2	6.15	123.3	5.99	120.0	5.90	116.1	5.80	109.8	5.49
		25.4	133.0	6.40	130.2	6.24	126.0	6.09	123.0	5.99	119.0	5.78	112.4	5.41
		31.7	133.6	6.34	130.1	6.19	127.0	6.09	123.7	5.99	119.7	5.80	113.1	5.61
	77	13.2	135.2	6.03	131.2	5.76	127.0	5.65	124.3	5.51	121.0	5.41	114.4	5.03
		25.4	135.5	5.94	131.2	5.72	127.0	5.61	124.3	5.41	121.0	5.32	114.4	4.93
		31.7	135.9	5.72	131.2	5.57	127.0	5.51	124.3	5.41	121.0	5.22	114.4	4.93
	86	13.2	135.9	5.74	131.2	5.47	127.0	5.32	124.3	5.12	121.0	5.03	114.4	4.64
		25.4	135.9	5.55	131.2	5.34	127.0	5.22	124.3	5.03	121.0	4.83	114.4	4.54
		31.7	135.9	5.37	131.2	5.22	127.0	5.12	124.3	5.03	121.0	4.83	114.4	4.45
	95	13.2	135.9	5.45	131.2	5.18	127.0	5.03	124.3	4.83	121.0	4.64	114.4	4.25
		25.4	135.9	5.14	131.2	4.99	127.0	4.83	124.3	4.64	121.0	4.45	114.4	4.16
		31.7	135.9	5.08	131.2	4.95	127.0	4.83	124.3	4.64	121.0	4.45	114.4	4.06
	104	13.2	135.9	5.26	131.2	4.93	127.0	4.74	124.3	4.54	121.0	4.35	114.4	3.96
		25.4	135.9	4.85	131.2	4.70	127.0	4.54	124.3	4.35	121.0	4.16	114.4	3.87
		31.7	135.9	4.79	131.2	4.64	127.0	4.54	124.3	4.35	121.0	4.16	114.4	3.77
	113	13.2	135.9	5.07	131.2	4.68	127.0	4.45	124.3	4.25	121.0	4.06	114.4	3.67
		25.4	135.9	4.56	131.2	4.41	127.0	4.25	124.3	4.06	121.0	3.87	114.4	3.58
		31.7	135.9	4.50	131.2	4.33	127.0	4.25	124.3	4.06	121.0	3.87	114.4	3.48

TC = Total Heating Capacity (MBh).
PI = Power input (KW).

Power input (KW) includes compressor(s) and controls.
Test condition based on 25 feet of equivalent refrigerant piping and no change in elevation between indoor unit and water source unit.

Due to our policy of continuous product innovation, some specifications may change without notification.
©LG Electronics U.S.A., Inc., Englewood Cliffs, NJ. All rights reserved. "LG" is a registered trademark of LG Corp.

Table 25b: Heating Capacity ARWB096DA2 / ARWN096DA2

Combination Ratio (%) (Capacity index)	Inlet Water Temperature (°F)	Water Flow Rate (gpm)	Indoor Unit Entering Air Wet Bulb Temperature °F											
			61		65		68		70		72		75	
			TC MBh	PI kW	TC MBh	PI kW	TC MBh	PI kW	TC MBh	PI kW	TC MBh	PI kW	TC MBh	PI kW
110	23	13.2	47.3	6.26	47.0	5.83	46.7	5.44	46.2	5.21	46.3	5.06	45.3	4.53
		25.4	53.5	6.68	53.2	6.27	52.9	5.90	52.3	5.65	52.3	5.49	51.3	4.92
		31.7	59.1	7.11	58.7	6.70	58.4	6.36	57.8	6.10	57.8	5.92	56.6	5.30
	32	13.2	82.2	8.44	80.4	8.08	78.7	7.82	77.2	7.49	76.5	7.28	73.6	6.51
		25.4	84.1	8.52	82.3	8.16	80.5	7.91	79.0	7.58	78.3	7.36	75.3	6.59
		31.7	85.4	8.52	83.6	8.16	81.8	7.91	80.2	7.58	79.5	7.36	76.4	6.59
	41	13.2	119.6	9.09	116.6	8.75	113.7	8.53	111.1	8.17	106.8	7.94	101.6	7.11
		25.4	121.2	9.25	117.5	8.91	113.8	8.70	111.1	8.34	106.8	8.10	101.6	7.25
		31.7	121.9	9.31	117.8	8.97	113.8	8.76	111.1	8.40	106.8	8.16	101.6	7.30
	50	13.2	120.1	8.13	117.0	7.86	113.7	7.69	111.1	7.42	106.8	7.16	101.6	6.45
		25.4	121.9	8.19	118.2	7.95	114.4	7.78	111.8	7.46	107.5	7.14	102.1	6.48
		31.7	122.6	8.19	118.7	7.95	114.8	7.76	112.0	7.44	107.7	7.17	102.4	6.55
	59	13.2	120.5	7.17	117.3	6.98	113.8	6.86	111.1	6.67	106.8	6.38	101.6	5.80
		25.4	122.5	7.13	119.0	6.98	115.1	6.86	112.4	6.57	108.2	6.19	102.6	5.70
		31.7	123.2	7.08	119.6	6.92	115.7	6.77	112.8	6.48	108.5	6.19	103.2	5.80
	68	13.2	122.9	6.21	119.3	6.05	115.4	5.90	112.4	5.80	108.2	5.61	102.6	5.26
		25.4	125.5	6.26	120.9	6.05	116.7	5.90	114.1	5.80	109.5	5.51	104.2	5.22
		31.7	126.2	6.26	121.9	6.05	117.4	5.90	114.4	5.70	110.1	5.51	104.5	5.22
	77	13.2	126.3	5.63	122.3	5.41	117.4	5.32	114.8	5.12	110.8	4.93	104.9	4.54
		25.4	127.3	5.59	122.3	5.32	117.4	5.22	114.8	5.03	110.8	4.83	104.9	4.54
		31.7	127.9	5.59	122.3	5.34	117.4	5.12	114.8	5.03	110.8	4.74	104.9	4.45
	86	13.2	127.9	5.12	122.3	4.93	117.4	4.74	114.8	4.64	110.8	4.35	104.9	4.06
		25.4	127.9	5.03	122.3	4.83	117.4	4.64	114.8	4.54	110.8	4.25	104.9	3.96
		31.7	127.9	4.99	122.3	4.74	117.4	4.54	114.8	4.45	110.8	4.25	104.9	3.96
	95	13.2	127.9	4.83	122.3	4.54	117.4	4.35	114.8	4.16	110.8	3.96	104.9	3.67
		25.4	127.9	4.64	122.3	4.45	117.4	4.25	114.8	4.06	110.8	3.87	104.9	3.58
		31.7	127.9	4.52	122.3	4.35	117.4	4.16	114.8	4.06	110.8	3.87	104.9	3.58
	104	13.2	127.9	4.54	122.3	4.35	117.4	4.06	114.8	3.87	110.8	3.67	104.9	3.38
		25.4	127.9	4.35	122.3	4.16	117.4	3.87	114.8	3.77	110.8	3.58	104.9	3.29
		31.7	127.9	4.29	122.3	4.06	117.4	3.87	114.8	3.67	110.8	3.48	104.9	3.19
	113	13.2	127.9	4.25	122.3	4.16	117.4	3.77	114.8	3.58	110.8	3.38	104.9	3.09
		25.4	127.9	4.06	122.3	3.87	117.4	3.48	114.8	3.48	110.8	3.29	104.9	3.00
		31.7	127.9	4.06	122.3	3.77	117.4	3.58	114.8	3.29	110.8	3.09	104.9	2.80
100	23	13.2	44.7	6.26	44.4	5.91	44.2	5.44	43.8	5.21	43.4	4.98	42.6	4.53
		25.4	50.6	6.68	50.3	6.35	50.0	5.90	49.5	5.65	49.1	5.41	48.3	4.92
		31.7	55.9	7.11	55.5	6.79	55.2	6.36	54.7	6.10	54.3	5.83	53.3	5.30
	32	13.2	77.7	8.44	76.0	8.19	74.4	7.82	73.1	7.49	71.8	7.17	69.3	6.51
		25.4	79.5	8.52	77.8	8.27	76.1	7.91	74.8	7.58	73.5	7.25	70.9	6.59
		31.7	80.7	8.52	79.0	8.27	77.3	7.91	75.9	7.58	74.6	7.25	72.0	6.59
	41	13.2	114.4	9.09	110.4	8.87	107.4	8.53	105.2	8.17	100.2	7.82	95.6	7.11
		25.4	116.0	9.25	111.2	9.03	107.5	8.70	105.2	8.34	100.2	7.98	95.6	7.25
		31.7	116.7	9.31	111.5	9.09	107.5	8.76	105.2	8.40	100.2	8.03	95.6	7.30
	50	13.2	114.9	8.13	110.7	7.94	107.5	7.69	105.2	7.42	100.2	7.05	95.6	6.45
		25.4	116.0	8.28	111.3	8.04	107.5	7.78	105.2	7.46	100.2	7.08	95.6	6.48
		31.7	116.8	8.25	111.8	8.04	107.5	7.76	105.2	7.44	100.2	7.06	95.6	6.45
	59	13.2	115.4	7.17	111.1	7.02	107.5	6.86	105.2	6.67	100.2	6.28	95.6	5.80
		25.4	116.0	7.31	111.4	7.04	107.5	6.86	105.2	6.57	100.2	6.19	95.6	5.70
		31.7	117.0	7.19	112.0	6.98	107.5	6.77	105.2	6.48	100.2	6.09	95.6	5.61
	68	13.2	116.3	6.13	111.7	5.95	107.5	5.80	105.2	5.70	100.2	5.32	95.6	5.03
		25.4	118.0	6.24	112.0	5.97	107.5	5.80	105.2	5.61	100.2	5.22	95.6	4.83
		31.7	118.7	6.13	113.0	5.92	107.5	5.70	105.2	5.51	100.2	5.12	95.6	4.74
	77	13.2	117.7	5.34	113.4	5.14	107.5	4.93	105.2	4.74	100.2	4.45	95.6	4.06
		25.4	119.4	5.36	113.4	5.03	107.5	4.83	105.2	4.64	100.2	4.35	95.6	4.06
		31.7	120.0	5.24	113.4	4.99	107.5	4.74	105.2	4.54	100.2	4.35	95.6	3.96
	86	13.2	120.0	4.83	113.4	4.45	107.5	4.16	105.2	4.06	100.2	3.77	95.6	3.58
		25.4	120.0	4.74	113.4	4.35	107.5	4.12	105.2	3.96	100.2	3.77	95.6	3.48
		31.7	120.0	4.64	113.4	4.35	107.5	4.06	105.2	3.96	100.2	3.67	95.6	3.48
	95	13.2	120.0	4.45	113.4	4.06	107.5	3.67	105.2	3.58	100.2	3.38	95.6	3.09
		25.4	120.0	4.25	113.4	3.87	107.5	3.63	105.2	3.48	100.2	3.29	95.6	3.00
		31.7	120.0	4.25	113.4	3.87	107.5	3.58	105.2	3.48	100.2	3.29	95.6	3.00
	104	13.2	120.0	4.16	113.4	3.77	107.5	3.29	105.2	3.19	100.2	3.00	95.6	2.80
		25.4	120.0	3.96	113.4	3.58	107.5	3.25	105.2	3.09	100.2	2.90	95.6	2.71
		31.7	120.0	3.87	113.4	3.58	107.5	3.19	105.2	3.09	100.2	2.90	95.6	2.71
	113	13.2	120.0	3.87	113.4	3.48	107.5	2.90	105.2	2.80	100.2	2.61	95.6	2.51
		25.4	120.0	3.67	113.4	3.29	107.5	2.86	105.2	2.71	100.2	2.51	95.6	2.42
		31.7	120.0	3.48	113.4	3.29	107.5	2.80	105.2	2.71	100.2	2.51	95.6	2.42

TC = Total Heating Capacity (MBh).
PI = Power input (KW).

Power input (KW) includes compressor(s) and controls.
Test condition based on 25 feet of equivalent refrigerant piping and no change in elevation between indoor unit and water source unit.

LG

Due to our policy of continuous product innovation, some specifications may change without notification.
©LG Electronics U.S.A., Inc., Englewood Cliffs, NJ. All rights reserved. "LG" is a registered trademark of LG Corp.

PERFORMANCE DATA

Heating Capacity—ARWB096DA2 / ARWN096DA2 (460 Volt)

Table 25c: Heating Capacity ARWB096DA2 / ARWN096DA2

Combination Ratio (%) (Capacity index)	Inlet Water Temperature (°F)	Water Flow Rate (gpm)	Indoor Unit Entering Air Wet Bulb Temperature °F											
			61		65		68		70		72		75	
			TC MBh	PI kW	TC MBh	PI kW	TC MBh	PI kW	TC MBh	PI kW	TC MBh	PI kW	TC MBh	PI kW
90	23	13.2	42.2	5.81	40.9	5.30	39.7	4.67	39.4	4.45	39.1	4.29	38.4	3.85
		25.4	47.8	6.20	46.3	5.69	44.9	5.07	44.6	4.83	44.3	4.66	43.4	4.18
		31.7	52.8	6.59	51.1	6.09	49.6	5.47	49.2	5.21	48.9	5.02	48.0	4.51
	32	13.2	73.4	7.80	70.0	7.32	66.8	6.72	65.8	6.41	64.7	6.17	62.3	5.54
		25.4	75.1	7.88	71.6	7.40	68.4	6.79	67.3	6.48	66.2	6.24	63.8	5.60
		31.7	76.2	7.88	72.7	7.40	69.5	6.79	68.3	6.48	67.3	6.24	64.8	5.60
	41	13.2	103.2	8.39	99.7	7.92	96.6	7.33	94.6	6.99	90.4	6.73	86.1	6.04
		25.4	103.6	8.54	99.4	8.07	96.6	7.47	94.6	7.13	90.4	6.87	86.1	6.16
		31.7	104.2	8.59	99.7	8.12	96.6	7.53	94.6	7.18	90.4	6.92	86.1	6.21
	50	13.2	103.6	7.38	100.0	7.02	96.6	6.61	94.6	6.34	90.4	6.07	86.1	5.48
		25.4	103.4	7.40	99.5	7.05	96.6	6.64	94.6	6.37	90.4	6.05	86.1	5.50
		31.7	104.1	7.38	99.8	7.03	96.6	6.62	94.6	6.35	90.4	6.07	86.1	5.52
	59	13.2	104.0	6.36	100.3	6.13	96.6	5.90	94.6	5.70	90.4	5.41	86.1	4.93
		25.4	103.3	6.26	99.6	6.03	96.6	5.80	94.6	5.61	90.4	5.22	86.1	4.83
		31.7	104.0	6.17	99.9	5.94	96.6	5.70	94.6	5.51	90.4	5.22	86.1	4.83
	68	13.2	104.7	5.39	100.7	5.22	96.6	5.03	94.6	4.83	90.4	4.64	86.1	4.35
		25.4	104.3	5.39	99.9	5.16	96.6	4.93	94.6	4.74	90.4	4.45	86.1	4.16
		31.7	104.6	5.30	100.2	5.12	96.6	4.93	94.6	4.74	90.4	4.45	86.1	4.16
	77	13.2	106.8	4.70	102.2	4.45	96.6	4.25	94.6	4.06	90.4	3.87	86.1	3.58
		25.4	107.8	4.66	102.2	4.41	96.6	4.16	94.6	4.06	90.4	3.77	86.1	3.48
		31.7	108.2	4.54	102.2	4.31	96.6	4.16	94.6	3.96	90.4	3.77	86.1	3.48
	86	13.2	108.2	4.25	102.2	3.96	96.6	3.67	94.6	3.58	90.4	3.38	86.1	3.09
		25.4	108.2	4.16	102.2	3.87	96.6	3.58	94.6	3.48	90.4	3.29	86.1	3.09
		31.7	108.2	4.06	102.2	3.77	96.6	3.58	94.6	3.48	90.4	3.29	86.1	3.00
	95	13.2	108.2	3.87	102.2	3.58	96.6	3.29	94.6	3.19	90.4	3.00	86.1	2.80
		25.4	108.2	3.77	102.2	3.48	96.6	3.19	94.6	3.09	90.4	2.90	86.1	2.71
		31.7	108.2	3.67	102.2	3.38	96.6	3.09	94.6	3.00	90.4	2.90	86.1	2.71
	104	13.2	108.2	3.58	102.2	3.29	96.6	2.90	94.6	2.80	90.4	2.71	86.1	2.51
		25.4	108.2	3.38	102.2	3.19	96.6	2.80	94.6	2.71	90.4	2.61	86.1	2.42
		31.7	108.2	3.38	102.2	3.19	96.6	2.80	94.6	2.71	90.4	2.61	86.1	2.42
	113	13.2	108.2	3.29	102.2	3.00	96.6	2.51	94.6	2.42	90.4	2.42	86.1	2.22
		25.4	108.2	3.00	102.2	2.90	96.6	2.42	94.6	2.32	90.4	2.32	86.1	2.13
		31.7	108.2	3.09	102.2	3.00	96.6	2.51	94.6	2.42	90.4	2.32	86.1	2.13
80	23	13.2	39.9	4.16	37.4	4.00	35.4	3.83	35.0	3.70	34.8	3.53	34.1	3.25
		25.4	45.1	4.52	42.3	4.34	40.0	4.15	39.6	4.01	39.4	3.83	38.6	3.52
		31.7	49.9	4.87	46.7	4.68	44.2	4.48	43.7	4.33	43.5	4.13	42.6	3.80
	32	13.2	69.3	5.99	63.9	5.75	59.5	5.51	58.4	5.32	57.6	5.07	55.4	4.67
		25.4	71.0	6.06	65.4	5.82	60.9	5.57	59.8	5.38	59.0	5.13	56.7	4.72
		31.7	72.0	6.06	66.4	5.82	61.9	5.57	60.7	5.38	59.9	5.13	57.6	4.72
	41	13.2	95.5	6.53	90.1	6.28	86.0	6.00	84.1	5.80	80.5	5.53	76.5	5.09
		25.4	96.3	6.67	90.8	6.40	86.1	6.13	84.1	5.92	80.5	5.64	76.5	5.20
		31.7	96.3	6.71	90.7	6.45	86.1	6.17	84.1	5.96	80.5	5.68	76.5	5.23
	50	13.2	95.9	5.97	90.4	5.70	86.0	5.42	84.1	5.27	80.5	4.99	76.5	4.62
		25.4	96.3	5.94	90.8	5.67	86.1	5.43	84.1	5.28	80.5	5.00	76.5	4.63
		31.7	96.3	5.92	90.7	5.69	86.1	5.45	84.1	5.25	80.5	4.97	76.5	4.60
	59	13.2	96.3	5.41	90.7	5.12	86.1	4.83	84.1	4.74	80.5	4.45	76.5	4.16
		25.4	96.3	5.22	90.7	4.93	86.1	4.74	84.1	4.64	80.5	4.35	76.5	4.06
		31.7	96.3	5.12	90.7	4.93	86.1	4.74	84.1	4.54	80.5	4.25	76.5	3.96
	68	13.2	96.3	4.54	90.7	4.35	86.1	4.16	84.1	4.06	80.5	3.87	76.5	3.58
		25.4	96.3	4.45	90.7	4.25	86.1	4.16	84.1	3.96	80.5	3.77	76.5	3.48
		31.7	96.3	4.35	90.7	4.16	86.1	4.06	84.1	3.96	80.5	3.67	76.5	3.48
	77	13.2	96.3	4.06	90.7	3.77	86.1	3.58	84.1	3.48	80.5	3.29	76.5	3.09
		25.4	96.3	3.96	90.7	3.67	86.1	3.58	84.1	3.38	80.5	3.19	76.5	3.00
		31.7	96.3	3.87	90.7	3.67	86.1	3.48	84.1	3.38	80.5	3.19	76.5	3.00
	86	13.2	96.3	3.58	90.7	3.38	86.1	3.19	84.1	3.09	80.5	2.90	76.5	2.71
		25.4	96.3	3.48	90.7	3.29	86.1	3.09	84.1	3.00	80.5	2.80	76.5	2.61
		31.7	96.3	3.48	90.7	3.29	86.1	3.09	84.1	3.00	80.5	2.80	76.5	2.61
	95	13.2	96.3	3.29	90.7	3.09	86.1	2.80	84.1	2.71	80.5	2.61	76.5	2.42
		25.4	96.3	3.19	90.7	3.00	86.1	2.71	84.1	2.71	80.5	2.51	76.5	2.42
		31.7	96.3	3.19	90.7	2.90	86.1	2.71	84.1	2.61	80.5	2.51	76.5	2.32
	104	13.2	96.3	3.09	90.7	2.80	86.1	2.51	84.1	2.51	80.5	2.32	76.5	2.22
		25.4	96.3	2.90	90.7	2.71	86.1	2.51	84.1	2.42	80.5	2.32	76.5	2.13
		31.7	96.3	2.90	90.7	2.71	86.1	2.42	84.1	2.42	80.5	2.32	76.5	2.13
	113	13.2	96.3	2.90	90.7	2.51	86.1	2.22	84.1	2.32	80.5	2.03	76.5	2.03
		25.4	96.3	2.61	90.7	2.42	86.1	2.32	84.1	2.13	80.5	2.13	76.5	1.84
		31.7	96.3	2.61	90.7	2.51	86.1	2.13	84.1	2.22	80.5	2.13	76.5	1.93

TC = Total Heating Capacity (MBh).
PI = Power input (KW).

Power input (KW) includes compressor(s) and controls.
Test condition based on 25 feet of equivalent refrigerant piping and no change in elevation between indoor unit and water source unit.

Due to our policy of continuous product innovation, some specifications may change without notification.
©LG Electronics U.S.A., Inc., Englewood Cliffs, NJ. All rights reserved. "LG" is a registered trademark of LG Corp.

PERFORMANCE DATA

Heating Capacity—ARWB096DA2 / ARWN096DA2 (460 Volt)

Table 25d: Heating Capacity ARWB096DA2 / ARWN096DA2

Combination Ratio (%) (Capacity index)	Inlet Water Temperature (°F)	Water Flow Rate (gpm)	Indoor Unit Entering Air Wet Bulb Temperature °F											
			61		65		68		70		72		75	
			TC MBh	PI kW	TC MBh	PI kW	TC MBh	PI kW	TC MBh	PI kW	TC MBh	PI kW	TC MBh	PI kW
70	23	13.2	34.8	3.57	32.7	3.40	30.9	3.29	30.6	3.10	30.4	2.99	29.9	2.72
		25.4	39.4	3.87	37.0	3.69	34.9	3.57	34.6	3.36	34.4	3.24	33.8	2.95
		31.7	43.6	4.18	40.9	3.98	38.6	3.85	38.3	3.62	38.0	3.50	37.3	3.18
	32	13.2	60.6	5.13	56.0	4.89	52.0	4.73	51.1	4.45	50.3	4.30	48.5	3.91
		25.4	62.0	5.19	57.3	4.94	53.2	4.79	52.3	4.50	51.5	4.35	49.6	3.95
		31.7	62.9	5.19	58.2	4.94	54.0	4.79	53.1	4.50	52.3	4.35	50.4	3.95
	41	13.2	83.4	5.60	79.0	5.33	75.1	5.16	73.5	4.86	70.2	4.69	66.9	4.26
		25.4	84.1	5.71	79.6	5.44	75.2	5.27	73.5	4.95	70.2	4.79	66.9	4.35
		31.7	84.1	5.75	79.5	5.48	75.2	5.31	73.5	4.99	70.2	4.82	66.9	4.38
	50	13.2	83.7	5.12	79.2	4.84	75.2	4.66	73.5	4.41	70.2	4.23	66.9	3.87
		25.4	84.1	5.08	79.5	4.80	75.2	4.62	73.5	4.41	70.2	4.23	66.9	3.87
		31.7	84.1	5.10	79.5	4.82	75.2	4.64	73.5	4.43	70.2	4.20	66.9	3.88
	59	13.2	84.1	4.64	79.5	4.35	75.2	4.16	73.5	3.96	70.2	3.77	66.9	3.48
		25.4	84.1	4.45	79.5	4.16	75.2	3.96	73.5	3.87	70.2	3.67	66.9	3.38
		31.7	84.1	4.45	79.5	4.16	75.2	3.96	73.5	3.87	70.2	3.58	66.9	3.38
	68	13.2	84.1	3.87	79.5	3.67	75.2	3.58	73.5	3.48	70.2	3.29	66.9	3.09
		25.4	84.1	3.77	79.5	3.58	75.2	3.48	73.5	3.38	70.2	3.19	66.9	3.00
		31.7	84.1	3.77	79.5	3.58	75.2	3.48	73.5	3.29	70.2	3.19	66.9	2.90
	77	13.2	84.1	3.48	79.5	3.29	75.2	3.09	73.5	3.00	70.2	2.80	66.9	2.61
		25.4	84.1	3.38	79.5	3.19	75.2	3.00	73.5	2.90	70.2	2.80	66.9	2.61
		31.7	84.1	3.29	79.5	3.09	75.2	3.00	73.5	2.90	70.2	2.71	66.9	2.61
	86	13.2	84.1	3.09	79.5	2.90	75.2	2.71	73.5	2.61	70.2	2.51	66.9	2.32
		25.4	84.1	3.00	79.5	2.80	75.2	2.61	73.5	2.61	70.2	2.42	66.9	2.32
		31.7	84.1	3.00	79.5	2.80	75.2	2.61	73.5	2.51	70.2	2.42	66.9	2.32
	95	13.2	84.1	2.80	79.5	2.61	75.2	2.42	73.5	2.42	70.2	2.22	66.9	2.13
		25.4	84.1	2.71	79.5	2.51	75.2	2.42	73.5	2.32	70.2	2.22	66.9	2.03
		31.7	84.1	2.71	79.5	2.51	75.2	2.32	73.5	2.32	70.2	2.22	66.9	2.03
	104	13.2	84.1	2.61	79.5	2.42	75.2	2.22	73.5	2.13	70.2	2.03	66.9	1.93
		25.4	84.1	2.51	79.5	2.32	75.2	2.13	73.5	2.13	70.2	2.03	66.9	1.84
		31.7	84.1	2.51	79.5	2.32	75.2	2.13	73.5	2.03	70.2	1.93	66.9	1.84
	113	13.2	84.1	2.42	79.5	2.22	75.2	2.03	73.5	1.84	70.2	1.84	66.9	1.74
		25.4	84.1	2.32	79.5	2.13	75.2	1.84	73.5	1.93	70.2	1.84	66.9	1.64
		31.7	84.1	2.32	79.5	2.13	75.2	1.93	73.5	1.74	70.2	1.64	66.9	1.64
60	23	13.2	29.9	2.90	28.0	2.79	26.5	2.68	26.2	2.49	26.1	2.45	25.6	2.19
		25.4	33.9	3.15	31.7	3.03	30.0	2.91	29.7	2.70	29.6	2.66	29.0	2.38
		31.7	37.4	3.39	35.0	3.27	33.2	3.14	32.8	2.92	32.7	2.87	32.0	2.56
	32	13.2	52.0	4.17	47.9	4.02	44.7	3.85	43.8	3.58	43.2	3.53	41.6	3.15
		25.4	53.2	4.22	49.0	4.06	45.8	3.90	44.8	3.62	44.2	3.57	42.5	3.18
		31.7	54.0	4.22	49.8	4.06	46.5	3.90	45.5	3.62	44.9	3.57	43.2	3.18
	41	13.2	71.6	4.55	67.5	4.38	64.6	4.20	63.0	3.91	60.3	3.85	57.4	3.43
		25.4	72.2	4.64	68.0	4.47	64.6	4.29	63.0	3.99	60.3	3.93	57.4	3.50
		31.7	72.2	4.68	67.9	4.50	64.6	4.32	63.0	4.02	60.3	3.95	57.4	3.53
	50	13.2	71.9	4.16	67.7	3.98	64.6	3.79	63.0	3.55	60.3	3.47	57.4	3.12
		25.4	72.2	4.16	68.0	3.98	64.6	3.79	63.0	3.59	60.3	3.46	57.4	3.15
		31.7	72.2	4.17	67.9	3.94	64.6	3.75	63.0	3.55	60.3	3.43	57.4	3.12
	59	13.2	72.2	3.77	67.9	3.58	64.6	3.38	63.0	3.19	60.3	3.09	57.4	2.80
		25.4	72.2	3.67	67.9	3.48	64.6	3.29	63.0	3.19	60.3	3.00	57.4	2.80
		31.7	72.2	3.67	67.9	3.38	64.6	3.19	63.0	3.09	60.3	2.90	57.4	2.71
	68	13.2	72.2	3.29	67.9	3.09	64.6	2.90	63.0	2.80	60.3	2.71	57.4	2.51
		25.4	72.2	3.19	67.9	3.00	64.6	2.80	63.0	2.71	60.3	2.61	57.4	2.42
		31.7	72.2	3.19	67.9	3.00	64.6	2.80	63.0	2.71	60.3	2.61	57.4	2.42
	77	13.2	72.2	2.90	67.9	2.71	64.6	2.51	63.0	2.51	60.3	2.32	57.4	2.22
		25.4	72.2	2.80	67.9	2.61	64.6	2.51	63.0	2.42	60.3	2.32	57.4	2.13
		31.7	72.2	2.80	67.9	2.61	64.6	2.42	63.0	2.42	60.3	2.32	57.4	2.13
	86	13.2	72.2	2.61	67.9	2.42	64.6	2.32	63.0	2.22	60.3	2.13	57.4	2.03
		25.4	72.2	2.51	67.9	2.32	64.6	2.22	63.0	2.13	60.3	2.03	57.4	1.93
		31.7	72.2	2.51	67.9	2.32	64.6	2.22	63.0	2.13	60.3	2.03	57.4	1.93
	95	13.2	72.2	2.32	67.9	2.22	64.6	2.03	63.0	2.03	60.3	1.93	57.4	1.84
		25.4	72.2	2.32	67.9	2.13	64.6	2.03	63.0	1.93	60.3	1.84	57.4	1.74
		31.7	72.2	2.32	67.9	2.13	64.6	1.93	63.0	1.93	60.3	1.84	57.4	1.74
	104	13.2	72.2	2.13	67.9	2.03	64.6	1.84	63.0	1.84	60.3	1.74	57.4	1.64
		25.4	72.2	2.13	67.9	1.93	64.6	1.84	63.0	1.74	60.3	1.64	57.4	1.64
		31.7	72.2	2.13	67.9	1.93	64.6	1.84	63.0	1.74	60.3	1.64	57.4	1.64
	113	13.2	72.2	1.93	67.9	1.84	64.6	1.64	63.0	1.64	60.3	1.55	57.4	1.45
		25.4	72.2	1.93	67.9	1.74	64.6	1.64	63.0	1.55	60.3	1.45	57.4	1.55
		31.7	72.2	1.93	67.9	1.74	64.6	1.74	63.0	1.55	60.3	1.45	57.4	1.55

TC = Total Heating Capacity (MBh).
PI = Power input (KW).

Power input (KW) includes compressor(s) and controls.
Test condition based on 25 feet of equivalent refrigerant piping and no change in elevation between indoor unit and water source unit.

Due to our policy of continuous product innovation, some specifications may change without notification.
©LG Electronics U.S.A., Inc., Englewood Cliffs, NJ. All rights reserved. "LG" is a registered trademark of LG Corp.

PERFORMANCE DATA

Heating Capacity—ARWB096DA2 / ARWN096DA2 (460 Volt)

Table 25e: Heating Capacity ARWB096DA2 / ARWN096DA2

Combination Ratio (%) (Capacity index)	Inlet Water Temperature (°F)	Water Flow Rate (gpm)	Indoor Unit Entering Air Wet Bulb Temperature °F											
			61		65		68		70		72		75	
			TC	PI	TC	PI	TC	PI	TC	PI	TC	PI	TC	PI
			MBh	kW	MBh	kW	MBh	kW	MBh	kW	MBh	kW	MBh	kW
50	23	13.2	24.9	2.31	23.4	2.19	22.1	2.07	21.8	1.96	21.7	1.84	21.3	1.74
		25.4	28.1	2.50	26.4	2.38	25.0	2.24	24.7	2.13	24.6	2.00	24.1	1.88
		31.7	31.1	2.70	29.2	2.56	27.6	2.42	27.3	2.30	27.1	2.15	26.7	2.03
	32	13.2	43.2	3.32	40.0	3.15	37.2	2.97	36.4	2.82	35.9	2.65	34.6	2.50
		25.4	44.2	3.35	40.9	3.18	38.1	3.01	37.3	2.86	36.8	2.68	35.4	2.53
		31.7	44.9	3.35	41.5	3.18	38.6	3.01	37.9	2.86	37.3	2.68	36.0	2.53
	41	13.2	59.5	3.62	56.4	3.43	53.7	3.24	52.4	3.08	50.1	2.89	47.8	2.72
		25.4	60.0	3.69	56.8	3.50	53.8	3.31	52.4	3.14	50.1	2.94	47.8	2.78
		31.7	60.0	3.72	56.7	3.53	53.8	3.33	52.4	3.16	50.1	2.97	47.8	2.80
	50	13.2	59.8	3.31	56.5	3.12	53.7	2.93	52.4	2.80	50.1	2.60	47.8	2.47
		25.4	60.0	3.29	56.8	3.11	53.8	2.91	52.4	2.78	50.1	2.63	47.8	2.45
		31.7	60.0	3.31	56.7	3.12	53.8	2.92	52.4	2.79	50.1	2.59	47.8	2.46
	59	13.2	60.0	3.00	56.7	2.80	53.8	2.61	52.4	2.51	50.1	2.32	47.8	2.22
		25.4	60.0	2.90	56.7	2.71	53.8	2.51	52.4	2.42	50.1	2.32	47.8	2.13
		31.7	60.0	2.90	56.7	2.71	53.8	2.51	52.4	2.42	50.1	2.22	47.8	2.13
	68	13.2	60.0	2.61	56.7	2.42	53.8	2.32	52.4	2.22	50.1	2.13	47.8	1.93
		25.4	60.0	2.51	56.7	2.32	53.8	2.22	52.4	2.13	50.1	2.03	47.8	1.93
		31.7	60.0	2.51	56.7	2.32	53.8	2.22	52.4	2.13	50.1	2.03	47.8	1.93
	77	13.2	60.0	2.32	56.7	2.13	53.8	2.03	52.4	1.93	50.1	1.84	47.8	1.74
		25.4	60.0	2.22	56.7	2.13	53.8	1.93	52.4	1.93	50.1	1.84	47.8	1.74
		31.7	60.0	2.22	56.7	2.13	53.8	1.93	52.4	1.93	50.1	1.84	47.8	1.74
	86	13.2	60.0	2.13	56.7	1.93	53.8	1.84	52.4	1.74	50.1	1.74	47.8	1.64
		25.4	60.0	2.03	56.7	1.84	53.8	1.74	52.4	1.74	50.1	1.64	47.8	1.55
		31.7	60.0	2.03	56.7	1.84	53.8	1.74	52.4	1.74	50.1	1.64	47.8	1.55
	95	13.2	60.0	1.93	56.7	1.74	53.8	1.64	52.4	1.64	50.1	1.55	47.8	1.45
		25.4	60.0	1.84	56.7	1.74	53.8	1.64	52.4	1.55	50.1	1.55	47.8	1.45
		31.7	60.0	1.84	56.7	1.74	53.8	1.64	52.4	1.55	50.1	1.55	47.8	1.45
	104	13.2	60.0	1.74	56.7	1.64	53.8	1.55	52.4	1.45	50.1	1.45	47.8	1.35
		25.4	60.0	1.64	56.7	1.55	53.8	1.45	52.4	1.45	50.1	1.35	47.8	1.35
		31.7	60.0	1.64	56.7	1.55	53.8	1.45	52.4	1.45	50.1	1.35	47.8	1.35
	113	13.2	60.0	1.55	56.7	1.55	53.8	1.45	52.4	1.26	50.1	1.35	47.8	1.26
		25.4	60.0	1.45	56.7	1.35	53.8	1.26	52.4	1.35	50.1	1.16	47.8	1.26
		31.7	60.0	1.45	56.7	1.35	53.8	1.26	52.4	1.35	50.1	1.16	47.8	1.26

TC = Total Heating Capacity (MBh).
PI = Power input (KW).
Power input (KW) includes compressor(s) and controls.
Test condition based on 25 feet of equivalent refrigerant piping and no change in elevation between indoor unit and water source unit.

Due to our policy of continuous product innovation, some specifications may change without notification.
©LG Electronics U.S.A., Inc., Englewood Cliffs, NJ. All rights reserved. "LG" is a registered trademark of LG Corp.

PERFORMANCE DATA

Heating Capacity—ARWB192DA2 / ARWN192DA2 (460 Volt)

Table 26a: Heating Capacity ARWB192DA2 / ARWN192DA2

Combination Ratio (%) (Capacity index)	Inlet Water Temperature (°F)	Water Flow Rate (gpm)	Indoor Unit Entering Air Wet Bulb Temperature °F											
			61		65		68		70		72		75	
			TC MBh	PI kW	TC MBh	PI kW	TC MBh	PI kW	TC MBh	PI kW	TC MBh	PI kW	TC MBh	PI kW
130	23	26.4	110.1	12.48	109.2	11.76	108.6	10.97	107.1	10.66	108.5	10.36	105.6	9.29
		50.8	124.6	13.32	123.5	12.64	122.9	11.90	121.2	11.57	122.7	11.24	119.5	10.08
		63.4	137.6	14.16	136.5	13.52	135.7	12.83	133.9	12.48	135.6	12.13	132.0	10.87
	32	26.4	191.4	16.81	186.8	16.30	182.9	15.77	178.9	15.33	179.5	14.90	171.5	13.36
		50.8	195.8	16.98	191.2	16.47	187.2	15.95	183.1	15.51	183.7	15.07	175.5	13.51
		63.4	198.8	16.98	194.1	16.47	190.0	15.95	185.9	15.51	186.5	15.07	178.2	13.51
	41	26.4	274.7	18.10	270.2	17.65	264.2	17.20	257.4	16.72	250.5	16.25	236.7	14.57
		50.8	278.6	18.42	272.2	17.98	264.3	17.55	257.4	17.06	250.5	16.58	236.7	14.87
		63.4	280.2	18.54	273.0	18.10	264.3	17.68	257.4	17.19	250.5	16.70	236.7	14.98
	50	26.4	275.8	16.36	271.0	15.86	264.3	15.58	257.4	15.19	250.5	14.66	236.7	13.23
		50.8	282.3	16.23	276.1	15.91	268.5	15.70	261.6	15.16	254.3	14.63	240.5	13.19
		63.4	283.8	16.46	277.9	16.13	270.2	15.76	263.0	15.22	256.1	14.86	241.9	13.83
	59	26.4	277.0	14.63	271.8	14.08	264.3	13.96	257.4	13.65	250.5	13.07	236.7	11.90
		50.8	285.9	14.04	280.1	13.84	272.6	13.84	265.7	13.26	258.1	12.67	244.3	11.50
		63.4	287.3	14.39	282.8	14.16	276.1	13.84	268.5	13.26	261.6	13.03	247.1	12.67
	68	26.4	287.3	13.46	282.1	12.91	274.7	12.64	267.1	12.29	259.5	12.05	244.3	11.50
		50.8	296.3	13.07	291.1	12.87	283.0	12.60	275.4	12.48	268.5	12.36	253.3	11.12
		63.4	297.7	13.07	293.2	12.87	286.4	12.67	278.1	12.48	270.6	12.36	255.4	11.82
	77	26.4	300.9	12.87	293.3	12.52	286.4	12.29	280.9	12.09	274.7	11.90	258.8	11.12
		50.8	300.9	12.67	293.3	12.44	286.4	12.09	280.9	11.90	274.7	11.70	258.8	10.92
		63.4	300.9	12.48	293.3	12.13	286.4	11.90	280.9	11.70	274.7	11.50	258.8	10.73
	86	26.4	300.9	12.48	293.3	11.93	286.4	11.78	280.9	11.50	274.7	11.31	258.8	10.53
		50.8	300.9	12.09	293.3	11.86	286.4	11.50	280.9	11.31	274.7	10.92	258.8	10.14
		63.4	300.9	11.90	293.3	11.54	286.4	11.31	280.9	11.12	274.7	10.92	258.8	10.14
	95	26.4	300.9	11.90	293.3	11.54	286.4	11.31	280.9	10.92	274.7	10.53	258.8	9.75
		50.8	300.9	11.50	293.3	11.27	286.4	11.12	280.9	10.73	274.7	10.33	258.8	9.36
		63.4	300.9	11.50	293.3	11.15	286.4	10.92	280.9	10.53	274.7	10.14	258.8	9.36
	104	26.4	300.9	11.50	293.3	11.15	286.4	10.92	280.9	10.53	274.7	10.14	258.8	9.16
		50.8	300.9	11.12	293.3	10.88	286.4	10.53	280.9	10.14	274.7	9.75	258.8	8.78
		63.4	300.9	10.92	293.3	10.69	286.4	10.53	280.9	10.14	274.7	9.75	258.8	8.78
	113	26.4	300.9	11.11	293.3	10.76	286.4	10.53	280.9	10.14	274.7	9.75	258.8	8.58
		50.8	300.9	10.73	293.3	10.49	286.4	9.95	280.9	9.56	274.7	9.16	258.8	8.19
		63.4	300.9	10.33	293.3	10.22	286.4	10.14	280.9	9.75	274.7	9.36	258.8	8.19
120	23	26.4	104.7	12.48	103.8	11.76	103.2	10.97	102.0	10.51	102.8	10.21	100.0	9.14
		50.8	118.4	13.32	117.4	12.64	116.8	11.90	115.4	11.40	116.3	11.08	113.2	9.92
		63.4	130.8	14.16	129.7	13.52	129.0	12.83	127.5	12.30	128.5	11.94	125.0	10.69
	32	26.4	181.9	16.81	177.6	16.30	173.8	15.77	170.3	15.11	170.1	14.68	162.5	13.14
		50.8	186.2	16.98	181.7	16.47	177.9	15.95	174.2	15.29	174.1	14.85	166.3	13.29
		63.4	189.0	16.98	184.5	16.47	180.6	15.95	176.9	15.29	176.7	14.85	168.8	13.29
	41	26.4	261.7	18.10	257.2	17.65	251.1	17.20	245.0	16.48	237.4	16.01	224.3	14.33
		50.8	265.4	18.42	259.1	17.98	251.2	17.55	245.0	16.82	237.4	16.33	224.3	14.63
		63.4	266.9	18.54	257.6	18.10	251.2	17.68	245.0	16.94	237.4	16.45	224.3	14.73
	50	26.4	262.8	16.25	257.9	15.80	251.2	15.46	245.0	14.97	237.4	14.44	224.3	13.02
		50.8	267.7	16.46	262.0	16.03	254.0	15.70	247.8	15.04	239.8	14.41	226.7	13.06
		63.4	269.2	16.40	261.1	16.03	255.0	15.76	248.8	15.10	240.9	14.47	227.8	13.51
	59	26.4	263.9	14.39	258.7	13.96	251.2	13.73	245.0	13.46	237.4	12.87	224.3	11.70
		50.8	270.1	14.51	264.9	14.08	256.7	13.84	250.5	13.26	242.3	12.48	229.1	11.50
		63.4	271.4	14.27	264.7	13.96	258.8	13.84	252.6	13.26	244.3	12.48	231.2	12.29
	68	26.4	271.4	12.91	266.3	12.40	258.1	12.09	251.2	11.90	242.9	11.70	229.8	11.08
		50.8	278.4	12.91	272.5	12.60	263.7	12.29	257.4	12.09	249.2	11.66	235.4	10.92
		63.4	279.7	12.79	272.3	12.48	265.7	12.29	258.8	12.09	250.5	11.70	236.7	11.31
	77	26.4	283.0	12.17	274.7	11.62	265.7	11.39	260.2	11.12	253.3	10.92	239.5	10.14
		50.8	283.7	11.97	274.7	11.54	265.7	11.31	260.2	10.92	253.3	10.73	239.5	9.95
		63.4	284.4	11.54	274.7	11.23	265.7	11.12	260.2	10.92	253.3	10.53	239.5	9.95
	86	26.4	284.4	11.58	274.7	11.04	265.7	10.73	260.2	10.33	253.3	10.14	239.5	9.36
		50.8	284.4	11.19	274.7	10.76	265.7	10.53	260.2	10.14	253.3	9.75	239.5	9.16
		63.4	284.4	10.84	274.7	10.53	265.7	10.33	260.2	10.14	253.3	9.75	239.5	8.97
	95	26.4	284.4	11.00	274.7	10.45	265.7	10.14	260.2	9.75	253.3	9.36	239.5	8.58
		50.8	284.4	10.37	274.7	10.06	265.7	9.75	260.2	9.36	253.3	8.97	239.5	8.39
		63.4	284.4	10.26	274.7	9.98	265.7	9.75	260.2	9.36	253.3	8.97	239.5	8.19
	104	26.4	284.4	10.61	274.7	9.95	265.7	9.56	260.2	9.16	253.3	8.78	239.5	7.99
		50.8	284.4	9.79	274.7	9.48	265.7	9.16	260.2	8.78	253.3	8.39	239.5	7.80
		63.4	284.4	9.67	274.7	9.36	265.7	9.16	260.2	8.78	253.3	8.39	239.5	7.61
	113	26.4	284.4	10.22	274.7	9.44	265.7	8.97	260.2	8.58	253.3	8.19	239.5	7.41
		50.8	284.4	9.20	274.7	8.89	265.7	8.58	260.2	8.19	253.3	7.80	239.5	7.22
		63.4	284.4	9.09	274.7	8.74	265.7	8.58	260.2	8.19	253.3	7.80	239.5	7.02

TC = Total Heating Capacity (MBh).
PI = Power input (KW).

Power input (KW) includes compressor(s) and controls.
Test condition based on 25 feet of equivalent refrigerant piping and no change in elevation between indoor unit and water source unit.

LG

Due to our policy of continuous product innovation, some specifications may change without notification.
©LG Electronics U.S.A., Inc., Englewood Cliffs, NJ. All rights reserved. "LG" is a registered trademark of LG Corp.

PERFORMANCE DATA

Heating Capacity—ARWB192DA2 / ARWN192DA2 (460 Volt)

Table 26b: Heating Capacity ARWB192DA2 / ARWN192DA2

Combination Ratio (%) (Capacity index)	Inlet Water Temperature (°F)	Water Flow Rate (gpm)	Indoor Unit Entering Air Wet Bulb Temperature °F											
			61		65		68		70		72		75	
			TC MBh	PI kW	TC MBh	PI kW	TC MBh	PI kW	TC MBh	PI kW	TC MBh	PI kW	TC MBh	PI kW
110	23	26.4	98.9	12.63	98.4	11.76	97.8	10.97	96.8	10.51	96.8	10.21	94.8	9.14
		50.8	112.0	13.48	111.3	12.64	110.7	11.90	109.5	11.40	109.6	11.08	107.3	9.92
		63.4	123.7	14.34	123.0	13.52	122.3	12.83	121.0	12.30	121.0	11.94	118.5	10.69
	32	26.4	172.0	17.03	168.3	16.30	164.7	15.77	161.6	15.11	160.2	14.68	154.0	13.14
		50.8	176.0	17.20	172.3	16.47	168.6	15.95	165.4	15.29	164.0	14.85	157.6	13.29
		63.4	178.7	17.20	174.9	16.47	171.2	15.95	167.9	15.29	166.5	14.85	160.0	13.29
	41	26.4	250.3	18.34	244.1	17.65	238.0	17.20	232.6	16.48	223.6	16.01	212.6	14.33
		50.8	253.8	18.66	245.9	17.98	238.1	17.55	232.6	16.82	223.6	16.33	212.6	14.63
		63.4	255.2	18.78	246.6	18.10	238.1	17.68	232.6	16.94	223.6	16.45	212.6	14.73
	50	26.4	251.3	16.40	244.8	15.86	238.1	15.52	232.6	14.97	223.6	14.44	212.6	13.02
		50.8	255.1	16.53	247.5	16.03	239.5	15.70	234.0	15.04	225.0	14.41	213.6	13.06
		63.4	256.5	16.53	248.5	16.03	240.2	15.66	234.3	15.00	225.3	14.47	214.3	13.22
	59	26.4	252.3	14.47	245.6	14.08	238.1	13.84	232.6	13.46	223.6	12.87	212.6	11.70
		50.8	256.4	14.39	249.0	14.08	240.9	13.84	235.4	13.26	226.4	12.48	214.6	11.50
		63.4	257.8	14.27	250.4	13.96	242.3	13.65	236.0	13.07	227.1	12.48	216.0	11.70
	68	26.4	257.1	12.52	249.7	12.21	241.6	11.90	235.4	11.70	226.4	11.31	214.6	10.61
		50.8	262.7	12.64	253.1	12.21	244.3	11.90	238.8	11.70	229.1	11.12	218.1	10.53
		63.4	264.0	12.64	255.2	12.21	245.7	11.90	239.5	11.50	230.5	11.12	218.8	10.53
	77	26.4	264.3	11.35	256.1	10.92	245.7	10.73	240.2	10.33	231.9	9.95	219.5	9.16
		50.8	266.4	11.27	256.1	10.73	245.7	10.53	240.2	10.14	231.9	9.75	219.5	9.16
		63.4	267.8	11.27	256.1	10.76	245.7	10.33	240.2	10.14	231.9	9.56	219.5	8.97
	86	26.4	267.8	10.33	256.1	9.95	245.7	9.56	240.2	9.36	231.9	8.78	219.5	8.19
		50.8	267.8	10.14	256.1	9.75	245.7	9.36	240.2	9.16	231.9	8.58	219.5	7.99
		63.4	267.8	10.06	256.1	9.56	245.7	9.16	240.2	8.97	231.9	8.58	219.5	7.99
	95	26.4	267.8	9.75	256.1	9.16	245.7	8.78	240.2	8.39	231.9	7.99	219.5	7.41
		50.8	267.8	9.36	256.1	8.97	245.7	8.58	240.2	8.19	231.9	7.80	219.5	7.22
		63.4	267.8	9.13	256.1	8.78	245.7	8.39	240.2	8.19	231.9	7.80	219.5	7.22
	104	26.4	267.8	9.16	256.1	8.78	245.7	8.19	240.2	7.80	231.9	7.41	219.5	6.82
		50.8	267.8	8.78	256.1	8.39	245.7	7.80	240.2	7.61	231.9	7.22	219.5	6.63
		63.4	267.8	8.66	256.1	8.19	245.7	7.80	240.2	7.41	231.9	7.02	219.5	6.44
	113	26.4	267.8	8.58	256.1	8.39	245.7	7.61	240.2	7.22	231.9	6.82	219.5	6.24
		50.8	267.8	8.19	256.1	7.80	245.7	7.02	240.2	7.02	231.9	6.63	219.5	6.05
		63.4	267.8	8.19	256.1	7.61	245.7	7.22	240.2	6.63	231.9	6.24	219.5	5.65
100	23	26.4	93.5	12.63	93.0	11.91	92.4	10.97	91.6	10.51	90.8	10.05	89.3	9.14
		50.8	105.8	13.48	105.2	12.81	104.6	11.90	103.7	11.40	102.8	10.91	101.0	9.92
		63.4	116.9	14.34	116.2	13.70	115.5	12.83	114.5	12.30	113.6	11.76	111.6	10.69
	32	26.4	162.5	17.03	159.1	16.52	155.7	15.77	153.0	15.11	150.3	14.45	145.0	13.14
		50.8	166.3	17.20	162.8	16.69	159.3	15.95	156.6	15.29	153.8	14.62	148.4	13.29
		63.4	168.9	17.20	165.3	16.69	161.7	15.95	159.0	15.29	156.2	14.62	150.7	13.29
	41	26.4	239.5	18.34	231.1	17.89	224.9	17.20	220.2	16.48	209.8	15.77	200.2	14.33
		50.8	242.8	18.66	232.8	18.22	225.0	17.55	220.2	16.82	209.8	16.09	200.2	14.63
		63.4	244.2	18.78	233.5	18.34	225.0	17.68	220.2	16.94	209.8	16.20	200.2	14.73
	50	13.2	114.9	8.13	110.7	7.94	107.5	7.69	105.2	7.42	100.2	7.05	95.6	6.45
		25.4	116.0	8.28	111.3	8.04	107.5	7.78	105.2	7.46	100.2	7.08	95.6	6.48
		31.7	116.8	8.25	111.8	8.04	107.5	7.76	105.2	7.44	100.2	7.06	95.6	6.45
	59	13.2	115.4	7.17	111.1	7.02	107.5	6.86	105.2	6.67	100.2	6.28	95.6	5.80
		25.4	116.0	7.31	111.4	7.04	107.5	6.86	105.2	6.57	100.2	6.19	95.6	5.70
		31.7	117.0	7.19	112.0	6.98	107.5	6.77	105.2	6.48	100.2	6.09	95.6	5.61
	68	13.2	116.3	6.13	111.7	5.95	107.5	5.80	105.2	5.70	100.2	5.32	95.6	5.03
		25.4	118.0	6.24	112.0	5.97	107.5	5.80	105.2	5.61	100.2	5.22	95.6	4.83
		31.7	118.7	6.13	113.0	5.92	107.5	5.70	105.2	5.51	100.2	5.12	95.6	4.74
	77	13.2	117.7	5.34	113.4	5.14	107.5	4.93	105.2	4.74	100.2	4.45	95.6	4.06
		25.4	119.4	5.36	113.4	5.03	107.5	4.83	105.2	4.64	100.2	4.35	95.6	4.06
		31.7	120.0	5.24	113.4	4.99	107.5	4.74	105.2	4.54	100.2	4.35	95.6	3.96
	86	13.2	120.0	4.83	113.4	4.45	107.5	4.16	105.2	4.06	100.2	3.77	95.6	3.58
		25.4	120.0	4.74	113.4	4.35	107.5	4.12	105.2	3.96	100.2	3.77	95.6	3.48
		31.7	120.0	4.64	113.4	4.35	107.5	4.06	105.2	3.96	100.2	3.67	95.6	3.48
	95	13.2	120.0	4.45	113.4	4.06	107.5	3.67	105.2	3.58	100.2	3.38	95.6	3.09
		25.4	120.0	4.25	113.4	3.87	107.5	3.63	105.2	3.48	100.2	3.29	95.6	3.00
		31.7	120.0	4.25	113.4	3.87	107.5	3.58	105.2	3.48	100.2	3.29	95.6	3.00
	104	13.2	120.0	4.16	113.4	3.77	107.5	3.29	105.2	3.19	100.2	3.00	95.6	2.80
		25.4	120.0	3.96	113.4	3.58	107.5	3.25	105.2	3.09	100.2	2.90	95.6	2.71
		31.7	120.0	3.87	113.4	3.58	107.5	3.19	105.2	3.09	100.2	2.90	95.6	2.71
	113	13.2	120.0	3.87	113.4	3.48	107.5	2.90	105.2	2.80	100.2	2.61	95.6	2.51
		25.4	120.0	3.67	113.4	3.29	107.5	2.86	105.2	2.71	100.2	2.51	95.6	2.42
		31.7	120.0	3.48	113.4	3.29	107.5	2.80	105.2	2.71	100.2	2.51	95.6	2.42

TC = Total Heating Capacity (MBh).
PI = Power input (KW).

Power input (KW) includes compressor(s) and controls.
Test condition based on 25 feet of equivalent refrigerant piping and no change in elevation between indoor unit and water source unit.

Due to our policy of continuous product innovation, some specifications may change without notification.
©LG Electronics U.S.A., Inc., Englewood Cliffs, NJ. All rights reserved. "LG" is a registered trademark of LG Corp.

PERFORMANCE DATA

Heating Capacity—ARWB192DA2 / ARWN192DA2 (460 Volt)

Table 26c: Heating Capacity ARWB192DA2 / ARWN192DA2

Combination Ratio (%) (Capacity index)	Inlet Water Temperature (°F)	Water Flow Rate (gpm)	Indoor Unit Entering Air Wet Bulb Temperature °F											
			61		65		68		70		72		75	
			TC	PI	TC	PI	TC	PI	TC	PI	TC	PI	TC	PI
			MBh	kW	MBh	kW	MBh	kW	MBh	kW	MBh	kW	MBh	kW
90	23	26.4	88.4	11.73	85.6	10.69	83.1	9.42	82.4	8.99	81.9	8.66	80.3	7.77
		50.8	100.0	12.50	96.8	11.49	94.0	10.22	93.3	9.75	92.6	9.40	90.9	8.43
		63.4	110.5	13.28	107.0	12.28	103.8	11.03	103.0	10.52	102.3	10.14	100.4	9.09
	32	26.4	153.6	15.73	146.4	14.76	139.9	13.55	137.6	12.92	135.5	12.45	130.5	11.17
		50.8	157.2	15.89	149.9	14.92	143.2	13.70	140.9	13.07	138.7	12.60	133.6	11.30
		63.4	159.6	15.89	152.2	14.92	145.4	13.70	143.0	13.07	140.8	12.60	135.6	11.30
	41	26.4	216.0	16.93	208.7	15.98	202.1	14.78	198.1	14.09	189.1	13.58	180.1	12.18
		50.8	216.8	17.22	208.1	16.27	202.2	15.08	198.1	14.38	189.1	13.86	180.1	12.43
		63.4	218.1	17.33	208.7	16.38	202.2	15.19	198.1	14.49	189.1	13.96	180.1	12.52
	50	26.4	216.9	14.88	209.4	14.17	202.2	13.34	198.1	12.80	189.1	12.25	180.1	11.06
		50.8	216.5	14.93	208.2	14.22	202.2	13.39	198.1	12.85	189.1	12.20	180.1	11.09
		63.4	217.9	14.88	208.9	14.18	202.2	13.35	198.1	12.80	189.1	12.25	180.1	11.14
	59	26.4	217.8	12.83	210.0	12.36	202.2	11.90	198.1	11.50	189.1	10.92	180.1	9.95
		50.8	216.2	12.64	208.4	12.17	202.2	11.70	198.1	11.31	189.1	10.53	180.1	9.75
		63.4	217.6	12.44	209.1	11.97	202.2	11.50	198.1	11.12	189.1	10.53	180.1	9.75
	68	26.4	219.1	10.88	210.7	10.53	202.2	10.14	198.1	9.75	189.1	9.36	180.1	8.78
		50.8	218.3	10.88	209.1	10.41	202.2	9.95	198.1	9.56	189.1	8.97	180.1	8.39
		63.4	219.0	10.69	209.8	10.33	202.2	9.95	198.1	9.56	189.1	8.97	180.1	8.39
	77	26.4	223.6	9.48	214.0	8.97	202.2	8.58	198.1	8.19	189.1	7.80	180.1	7.22
		50.8	225.7	9.40	214.0	8.89	202.2	8.39	198.1	8.19	189.1	7.61	180.1	7.02
		63.4	226.4	9.16	214.0	8.70	202.2	8.39	198.1	7.99	189.1	7.61	180.1	7.02
	86	26.4	226.4	8.58	214.0	7.99	202.2	7.41	198.1	7.22	189.1	6.82	180.1	6.24
		50.8	226.4	8.39	214.0	7.80	202.2	7.22	198.1	7.02	189.1	6.63	180.1	6.24
		63.4	226.4	8.19	214.0	7.61	202.2	7.22	198.1	7.02	189.1	6.63	180.1	6.05
	95	26.4	226.4	7.80	214.0	7.22	202.2	6.63	198.1	6.44	189.1	6.05	180.1	5.65
		50.8	226.4	7.61	214.0	7.02	202.2	6.44	198.1	6.24	189.1	5.85	180.1	5.46
		63.4	226.4	7.41	214.0	6.82	202.2	6.24	198.1	6.05	189.1	5.85	180.1	5.46
	104	26.4	226.4	7.22	214.0	6.63	202.2	5.85	198.1	5.65	189.1	5.46	180.1	5.07
		50.8	226.4	6.82	214.0	6.44	202.2	5.65	198.1	5.46	189.1	5.27	180.1	4.88
		63.4	226.4	6.82	214.0	6.44	202.2	5.65	198.1	5.46	189.1	5.27	180.1	4.88
	113	26.4	226.4	6.63	214.0	6.05	202.2	5.07	198.1	4.87	189.1	4.88	180.1	4.48
		50.8	226.4	6.04	214.0	5.85	202.2	4.87	198.1	4.68	189.1	4.68	180.1	4.29
		63.4	226.4	6.24	214.0	6.05	202.2	5.07	198.1	4.88	189.1	4.68	180.1	4.29
80	23	26.4	83.5	8.40	78.2	8.07	74.0	7.72	73.2	7.46	72.9	7.11	71.4	6.55
		50.8	94.5	9.12	88.5	8.76	83.7	8.38	82.9	8.10	82.5	7.72	80.8	7.11
		63.4	104.4	9.83	97.7	9.45	92.5	9.04	91.6	8.73	91.1	8.33	89.3	7.66
	32	26.4	145.1	12.08	133.8	11.61	124.6	11.10	122.3	10.73	120.7	10.23	116.0	9.42
		50.8	148.5	12.22	136.9	11.74	127.5	11.23	125.2	10.86	123.5	10.35	118.7	9.53
		63.4	150.8	12.22	139.0	11.74	129.5	11.23	127.1	10.86	125.4	10.35	120.5	9.53
	41	26.4	199.8	13.18	188.7	12.66	180.0	12.11	176.0	11.70	168.4	11.16	160.1	10.27
		50.8	201.5	13.45	190.1	12.92	180.1	12.36	176.0	11.94	168.4	11.39	160.1	10.48
		63.4	201.5	13.54	189.8	13.01	180.1	12.45	176.0	12.03	168.4	11.47	160.1	10.56
	50	26.4	200.7	12.05	189.2	11.50	180.1	10.93	176.0	10.63	168.4	10.06	160.1	9.33
		50.8	201.5	11.99	189.9	11.43	180.1	10.96	176.0	10.65	168.4	10.08	160.1	9.34
		63.4	201.5	11.94	189.8	11.48	180.1	11.00	176.0	10.60	168.4	10.02	160.1	9.28
	59	26.4	201.5	10.92	189.8	10.33	180.1	9.75	176.0	9.56	168.4	8.97	160.1	8.39
		50.8	201.5	10.53	189.8	9.95	180.1	9.56	176.0	9.36	168.4	8.78	160.1	8.19
		63.4	201.5	10.33	189.8	9.95	180.1	9.56	176.0	9.16	168.4	8.58	160.1	7.99
	68	26.4	201.5	9.16	189.8	8.78	180.1	8.39	176.0	8.19	168.4	7.80	160.1	7.22
		50.8	201.5	8.97	189.8	8.58	180.1	8.39	176.0	7.99	168.4	7.61	160.1	7.02
		63.4	201.5	8.78	189.8	8.39	180.1	8.19	176.0	7.99	168.4	7.41	160.1	7.02
	77	26.4	201.5	8.19	189.8	7.61	180.1	7.22	176.0	7.02	168.4	6.63	160.1	6.24
		50.8	201.5	7.99	189.8	7.41	180.1	7.22	176.0	6.82	168.4	6.44	160.1	6.05
		63.4	201.5	7.80	189.8	7.41	180.1	7.02	176.0	6.82	168.4	6.44	160.1	6.05
	86	26.4	201.5	7.22	189.8	6.82	180.1	6.44	176.0	6.24	168.4	5.85	160.1	5.46
		50.8	201.5	7.02	189.8	6.63	180.1	6.24	176.0	6.05	168.4	5.65	160.1	5.27
		63.4	201.5	7.02	189.8	6.63	180.1	6.24	176.0	6.05	168.4	5.65	160.1	5.27
	95	26.4	201.5	6.63	189.8	6.24	180.1	5.65	176.0	5.46	168.4	5.27	160.1	4.88
		50.8	201.5	6.44	189.8	6.05	180.1	5.46	176.0	5.46	168.4	5.07	160.1	4.88
		63.4	201.5	6.44	189.8	5.85	180.1	5.46	176.0	5.27	168.4	5.07	160.1	4.68
	104	26.4	201.5	6.24	189.8	5.65	180.1	5.07	176.0	5.07	168.4	4.68	160.1	4.48
		50.8	201.5	5.85	189.8	5.46	180.1	5.07	176.0	4.88	168.4	4.68	160.1	4.29
		63.4	201.5	5.85	189.8	5.46	180.1	4.88	176.0	4.88	168.4	4.68	160.1	4.29
	113	26.4	201.5	5.85	189.8	5.07	180.1	4.48	176.0	4.68	168.4	4.10	160.1	4.09
		50.8	201.5	5.27	189.8	4.88	180.1	4.68	176.0	4.29	168.4	4.29	160.1	3.71
		63.4	201.5	5.27	189.8	5.07	180.1	4.29	176.0	4.49	168.4	4.29	160.1	3.90

TC = Total Heating Capacity (MBh).
PI = Power input (KW).

Power input (KW) includes compressor(s) and controls.
Test condition based on 25 feet of equivalent refrigerant piping and no change in elevation between indoor unit and water source unit.

LG

Due to our policy of continuous product innovation, some specifications may change without notification.
©LG Electronics U.S.A., Inc., Englewood Cliffs, NJ. All rights reserved. "LG" is a registered trademark of LG Corp.

PERFORMANCE DATA

Heating Capacity—ARWB192DA2 / ARWN192DA2 (460 Volt)

Table 26d: Heating Capacity ARWB192DA2 / ARWN192DA2

Combination Ratio (%) (Capacity index)	Inlet Water Temperature (°F)	Water Flow Rate (gpm)	Indoor Unit Entering Air Wet Bulb Temperature °F											
			61		65		68		70		72		75	
			TC MBh	PI kW	TC MBh	PI kW	TC MBh	PI kW	TC MBh	PI kW	TC MBh	PI kW	TC MBh	PI kW
70	23	26.4	72.9	7.20	68.5	6.85	64.6	6.64	64.1	6.24	63.6	6.03	62.5	5.48
		50.8	82.5	7.81	77.5	7.44	73.1	7.21	72.5	6.78	72.0	6.54	70.7	5.95
		63.4	91.2	8.43	85.6	8.02	80.8	7.77	80.1	7.31	79.6	7.06	78.1	6.42
	32	26.4	126.7	10.36	117.2	9.86	108.9	9.55	106.9	8.98	105.3	8.67	101.5	7.88
		50.8	129.7	10.48	120.0	9.97	111.4	9.66	109.5	9.08	107.8	8.77	103.9	7.98
		63.4	131.7	10.48	121.8	9.97	113.1	9.66	111.1	9.08	109.4	8.77	105.5	7.98
	41	26.4	174.5	11.29	165.3	10.75	157.3	10.42	153.9	9.79	147.0	9.46	140.1	8.60
		50.8	176.0	11.53	166.6	10.97	157.4	10.63	153.9	9.99	147.0	9.65	140.1	8.78
		63.4	176.0	11.61	166.3	11.05	157.4	10.71	153.9	10.07	147.0	9.72	140.1	8.84
	50	26.4	175.3	10.33	165.8	9.76	157.3	9.40	153.9	8.89	147.0	8.53	140.1	7.81
		50.8	176.0	10.25	166.5	9.68	157.4	9.31	153.9	8.90	147.0	8.53	140.1	7.80
		63.4	176.0	10.29	166.3	9.72	157.4	9.35	153.9	8.93	147.0	8.47	140.1	7.83
	59	26.4	176.0	9.36	166.3	8.78	157.4	8.39	153.9	7.99	147.0	7.61	140.1	7.02
		50.8	176.0	8.97	166.3	8.39	157.4	7.99	153.9	7.80	147.0	7.41	140.1	6.82
		63.4	176.0	8.97	166.3	8.39	157.4	7.99	153.9	7.80	147.0	7.22	140.1	6.82
	68	26.4	176.0	7.80	166.3	7.41	157.4	7.22	153.9	7.02	147.0	6.63	140.1	6.24
		50.8	176.0	7.61	166.3	7.22	157.4	7.02	153.9	6.82	147.0	6.44	140.1	6.05
		63.4	176.0	7.61	166.3	7.22	157.4	7.02	153.9	6.63	147.0	6.44	140.1	5.85
	77	26.4	176.0	7.02	166.3	6.63	157.4	6.24	153.9	6.05	147.0	5.65	140.1	5.27
		50.8	176.0	6.82	166.3	6.44	157.4	6.05	153.9	5.85	147.0	5.65	140.1	5.27
		63.4	176.0	6.63	166.3	6.24	157.4	6.05	153.9	5.85	147.0	5.46	140.1	5.27
	86	26.4	176.0	6.24	166.3	5.85	157.4	5.46	153.9	5.27	147.0	5.07	140.1	4.68
		50.8	176.0	6.05	166.3	5.65	157.4	5.27	153.9	5.27	147.0	4.88	140.1	4.68
		63.4	176.0	6.05	166.3	5.65	157.4	5.27	153.9	5.07	147.0	4.88	140.1	4.68
	95	26.4	176.0	5.65	166.3	5.27	157.4	4.88	153.9	4.88	147.0	4.48	140.1	4.29
		50.8	176.0	5.46	166.3	5.07	157.4	4.88	153.9	4.68	147.0	4.48	140.1	4.10
		63.4	176.0	5.46	166.3	5.07	157.4	4.68	153.9	4.68	147.0	4.48	140.1	4.10
	104	26.4	176.0	5.27	166.3	4.88	157.4	4.48	153.9	4.29	147.0	4.10	140.1	3.90
		50.8	176.0	5.07	166.3	4.68	157.4	4.29	153.9	4.29	147.0	4.10	140.1	3.71
		63.4	176.0	5.07	166.3	4.68	157.4	4.29	153.9	4.10	147.0	3.90	140.1	3.71
	113	26.4	176.0	4.88	166.3	4.49	157.4	4.09	153.9	3.71	147.0	3.71	140.1	3.51
		50.8	176.0	4.68	166.3	4.29	157.4	3.71	153.9	3.90	147.0	3.71	140.1	3.32
		63.4	176.0	4.68	166.3	4.29	157.4	3.90	153.9	3.51	147.0	3.31	140.1	3.32
60	23	26.4	62.6	5.85	58.6	5.64	55.6	5.41	54.9	5.03	54.7	4.95	53.6	4.42
		50.8	70.9	6.35	66.3	6.11	62.9	5.87	62.1	5.45	61.9	5.37	60.6	4.79
		63.4	78.3	6.85	73.2	6.59	69.5	6.33	68.6	5.88	68.4	5.79	66.9	5.17
	32	26.4	108.8	8.41	100.2	8.10	93.6	7.77	91.6	7.23	90.5	7.12	87.0	6.35
		50.8	111.4	8.51	102.6	8.20	95.8	7.86	93.7	7.31	92.6	7.20	89.0	6.42
		63.4	113.1	8.51	104.1	8.20	97.2	7.86	95.2	7.31	94.0	7.20	90.4	6.42
	41	26.4	149.9	9.18	141.3	8.84	135.2	8.48	131.8	7.88	126.3	7.76	120.1	6.93
		50.8	151.2	9.36	142.4	9.02	135.3	8.65	131.8	8.04	126.3	7.92	120.1	7.07
		63.4	151.2	9.43	142.2	9.08	135.3	8.71	131.8	8.10	126.3	7.98	120.1	7.12
	50	26.4	150.5	8.39	141.8	8.03	135.2	7.65	131.8	7.16	126.3	7.00	120.1	6.29
		50.8	151.2	8.39	142.3	8.02	135.3	7.64	131.8	7.24	126.3	6.98	120.1	6.36
		63.4	151.2	8.42	142.2	7.95	135.3	7.57	131.8	7.17	126.3	6.91	120.1	6.29
	59	26.4	151.2	7.61	142.2	7.22	135.3	6.82	131.8	6.44	126.3	6.24	120.1	5.65
		50.8	151.2	7.41	142.2	7.02	135.3	6.63	131.8	6.44	126.3	6.05	120.1	5.65
		63.4	151.2	7.41	142.2	6.82	135.3	6.44	131.8	6.24	126.3	5.85	120.1	5.46
	68	26.4	151.2	6.63	142.2	6.24	135.3	5.85	131.8	5.65	126.3	5.46	120.1	5.07
		50.8	151.2	6.44	142.2	6.05	135.3	5.65	131.8	5.46	126.3	5.27	120.1	4.88
		63.4	151.2	6.44	142.2	6.05	135.3	5.65	131.8	5.46	126.3	5.27	120.1	4.88
	77	26.4	151.2	5.85	142.2	5.46	135.3	5.07	131.8	5.07	126.3	4.68	120.1	4.48
		50.8	151.2	5.65	142.2	5.27	135.3	5.07	131.8	4.88	126.3	4.68	120.1	4.29
		63.4	151.2	5.65	142.2	5.27	135.3	4.88	131.8	4.88	126.3	4.68	120.1	4.29
	86	26.4	151.2	5.27	142.2	4.88	135.3	4.68	131.8	4.48	126.3	4.29	120.1	4.10
		50.8	151.2	5.07	142.2	4.68	135.3	4.48	131.8	4.29	126.3	4.10	120.1	3.90
		63.4	151.2	5.07	142.2	4.68	135.3	4.48	131.8	4.29	126.3	4.10	120.1	3.90
	95	26.4	151.2	4.68	142.2	4.48	135.3	4.10	131.8	4.10	126.3	3.90	120.1	3.71
		50.8	151.2	4.68	142.2	4.29	135.3	4.10	131.8	3.90	126.3	3.71	120.1	3.51
		63.4	151.2	4.68	142.2	4.29	135.3	3.90	131.8	3.90	126.3	3.71	120.1	3.51
	104	26.4	151.2	4.29	142.2	4.10	135.3	3.71	131.8	3.71	126.3	3.51	120.1	3.31
		50.8	151.2	4.29	142.2	3.90	135.3	3.71	131.8	3.51	126.3	3.31	120.1	3.31
		63.4	151.2	4.29	142.2	3.90	135.3	3.71	131.8	3.51	126.3	3.31	120.1	3.31
	113	26.4	151.2	3.90	142.2	3.71	135.3	3.32	131.8	3.32	126.3	3.12	120.1	2.92
		50.8	151.2	3.90	142.2	3.51	135.3	3.32	131.8	3.12	126.3	2.92	120.1	3.12
		63.4	151.2	3.90	142.2	3.51	135.3	3.51	131.8	3.12	126.3	2.92	120.1	3.12

TC = Total Heating Capacity (MBh).
PI = Power input (KW).

Power input (KW) includes compressor(s) and controls.
Test condition based on 25 feet of equivalent refrigerant piping and no change in elevation between indoor unit and water source unit.

Due to our policy of continuous product innovation, some specifications may change without notification.
©LG Electronics U.S.A., Inc., Englewood Cliffs, NJ. All rights reserved. "LG" is a registered trademark of LG Corp.

PERFORMANCE DATA

Heating Capacity—ARWB192DA2 / ARWN192DA2 (460 Volt)

Table 26e: Heating Capacity ARWB192DA2 / ARWN192DA2

Combination Ratio (%) (Capacity index)	Inlet Water Temperature (°F)	Water Flow Rate (gpm)	Indoor Unit Entering Air Wet Bulb Temperature °F											
			61		65		68		70		72		75	
			TC	PI	TC	PI	TC	PI	TC	PI	TC	PI	TC	PI
			MBh	kW	MBh	kW	MBh	kW	MBh	kW	MBh	kW	MBh	kW
50	23	26.4	52.0	4.65	48.9	4.42	46.2	4.17	45.7	3.96	45.4	3.71	44.6	3.50
		50.8	58.9	5.05	55.3	4.79	52.3	4.53	51.7	4.30	51.4	4.03	50.5	3.80
		63.4	65.1	5.44	61.1	5.17	57.8	4.88	57.1	4.63	56.8	4.34	55.8	4.10
	32	26.4	90.5	6.69	83.7	6.35	77.8	6.00	76.3	5.69	75.2	5.34	72.5	5.04
		50.8	92.6	6.77	85.6	6.42	79.6	6.07	78.0	5.76	76.9	5.40	74.2	5.10
		63.4	94.0	6.77	86.9	6.42	80.9	6.07	79.2	5.76	78.1	5.40	75.3	5.10
	41	26.4	124.6	7.29	118.0	6.93	112.4	6.54	109.7	6.21	104.9	5.82	100.1	5.49
		50.8	125.6	7.44	118.9	7.07	112.5	6.67	109.7	6.34	104.9	5.94	100.1	5.61
		63.4	125.6	7.50	118.7	7.12	112.5	6.72	109.7	6.38	104.9	5.98	100.1	5.65
	50	26.4	125.1	6.67	118.4	6.29	112.5	5.90	109.7	5.64	104.9	5.25	100.1	4.99
		50.8	125.6	6.65	118.8	6.26	112.5	5.87	109.7	5.61	104.9	5.31	100.1	4.95
		63.4	125.6	6.67	118.7	6.29	112.5	5.90	109.7	5.63	104.9	5.23	100.1	4.97
	59	26.4	125.6	6.05	118.7	5.65	112.5	5.27	109.7	5.07	104.9	4.68	100.1	4.48
		50.8	125.6	5.85	118.7	5.46	112.5	5.07	109.7	4.88	104.9	4.68	100.1	4.29
		63.4	125.6	5.85	118.7	5.46	112.5	5.07	109.7	4.88	104.9	4.48	100.1	4.29
	68	26.4	125.6	5.27	118.7	4.88	112.5	4.68	109.7	4.48	104.9	4.29	100.1	3.90
		50.8	125.6	5.07	118.7	4.68	112.5	4.48	109.7	4.29	104.9	4.10	100.1	3.90
		63.4	125.6	5.07	118.7	4.68	112.5	4.48	109.7	4.29	104.9	4.10	100.1	3.90
	77	26.4	125.6	4.68	118.7	4.29	112.5	4.10	109.7	3.90	104.9	3.71	100.1	3.51
		50.8	125.6	4.48	118.7	4.29	112.5	3.90	109.7	3.90	104.9	3.71	100.1	3.51
		63.4	125.6	4.48	118.7	4.29	112.5	3.90	109.7	3.90	104.9	3.71	100.1	3.51
	86	26.4	125.6	4.29	118.7	3.90	112.5	3.71	109.7	3.51	104.9	3.51	100.1	3.31
		50.8	125.6	4.10	118.7	3.71	112.5	3.51	109.7	3.51	104.9	3.31	100.1	3.12
		63.4	125.6	4.10	118.7	3.71	112.5	3.51	109.7	3.51	104.9	3.31	100.1	3.12
	95	26.4	125.6	3.90	118.7	3.51	112.5	3.31	109.7	3.31	104.9	3.12	100.1	2.93
		50.8	125.6	3.71	118.7	3.51	112.5	3.31	109.7	3.12	104.9	3.12	100.1	2.93
		63.4	125.6	3.71	118.7	3.51	112.5	3.31	109.7	3.12	104.9	3.12	100.1	2.93
	104	26.4	125.6	3.51	118.7	3.31	112.5	3.12	109.7	2.93	104.9	2.93	100.1	2.73
		50.8	125.6	3.31	118.7	3.12	112.5	2.93	109.7	2.93	104.9	2.73	100.1	2.73
		63.4	125.6	3.31	118.7	3.12	112.5	2.93	109.7	2.93	104.9	2.73	100.1	2.73
	113	26.4	125.6	3.12	118.7	3.12	112.5	2.93	109.7	2.54	104.9	2.73	100.1	2.53
		50.8	125.6	2.92	118.7	2.73	112.5	2.54	109.7	2.73	104.9	2.34	100.1	2.53
		63.4	125.6	2.92	118.7	2.73	112.5	2.54	109.7	2.73	104.9	2.34	100.1	2.53

TC = Total Heating Capacity (MBh).
PI = Power input (KW).
Power input (KW) includes compressor(s) and controls.
Test condition based on 25 feet of equivalent refrigerant piping and no change in elevation between indoor unit and water source unit.

Due to our policy of continuous product innovation, some specifications may change without notification.
©LG Electronics U.S.A., Inc., Englewood Cliffs, NJ. All rights reserved. "LG" is a registered trademark of LG Corp.

PERFORMANCE DATA

Heating Capacity—ARWB290DA2 / ARWN290DA2 (460 Volt)

Table 27a: Heating Capacity ARWB290DA2 / ARWN290DA2

Combination Ratio (%) (Capacity index)	Inlet Water Temperature (°F)	Water Flow Rate (gpm)	Indoor Unit Entering Air Wet Bulb Temperature °F											
			61		65		68		70		72		75	
			TC MBh	PI kW	TC MBh	PI kW	TC MBh	PI kW	TC MBh	PI kW	TC MBh	PI kW	TC MBh	PI kW
130	23	39.6	157.8	18.66	156.5	17.59	155.6	16.40	153.6	15.95	155.5	15.50	151.3	13.90
		76.2	178.6	19.92	177.1	18.91	176.1	17.80	173.8	17.30	175.9	16.82	171.2	15.08
		95.1	197.3	21.18	195.6	20.23	194.5	19.20	192.0	18.66	194.3	18.14	189.2	16.26
	32	39.6	274.3	25.15	267.8	24.38	262.1	23.59	256.4	22.93	257.3	22.29	245.8	19.98
		76.2	280.7	25.39	274.0	24.63	268.2	23.86	262.4	23.20	263.3	22.54	251.6	20.21
		95.1	285.0	25.39	278.2	24.63	272.4	23.86	266.4	23.20	267.3	22.54	255.4	20.21
	41	39.6	393.8	27.08	387.3	26.40	378.7	25.73	369.0	25.01	359.1	24.31	339.3	21.79
		76.2	399.3	27.55	390.1	26.89	378.9	26.25	369.0	25.52	359.1	24.80	339.3	22.24
		95.1	401.7	27.72	391.3	27.07	378.9	26.44	369.0	25.71	359.1	24.98	339.3	22.40
	50	39.6	395.4	24.48	388.4	23.73	378.8	23.30	369.0	22.71	359.1	21.92	339.3	19.79
		76.2	404.6	24.28	395.8	23.80	384.8	23.48	374.9	22.68	364.5	21.88	344.8	19.72
		95.1	406.7	24.62	398.3	24.12	387.3	23.57	376.9	22.77	367.0	22.23	346.7	20.68
	59	39.6	397.0	21.88	389.6	21.06	378.9	20.88	369.0	20.42	359.1	19.54	339.3	17.79
		76.2	409.9	21.00	401.4	20.71	390.8	20.71	380.9	19.83	370.0	18.96	350.2	17.21
		95.1	411.8	21.53	405.4	21.18	395.7	20.71	384.8	19.83	374.9	19.48	354.2	18.96
	68	39.6	411.8	20.13	404.4	19.31	393.7	18.90	382.8	18.38	372.0	18.03	350.2	17.21
		76.2	424.7	19.54	417.3	19.25	405.6	18.84	394.7	18.67	384.8	18.49	363.1	16.63
		95.1	426.7	19.54	420.2	19.25	410.5	18.96	398.7	18.67	387.8	18.49	366.0	17.68
	77	39.6	431.3	19.25	420.4	18.73	410.5	18.38	402.6	18.08	393.7	17.79	371.0	16.63
		76.2	431.3	18.96	420.4	18.61	410.5	18.08	402.6	17.79	393.7	17.50	371.0	16.33
		95.1	431.3	18.67	420.4	18.14	410.5	17.79	402.6	17.50	393.7	17.21	371.0	16.04
	86	39.6	431.3	18.67	420.4	17.85	410.5	17.62	402.6	17.21	393.7	16.92	371.0	15.75
		76.2	431.3	18.08	420.4	17.73	410.5	17.21	402.6	16.92	393.7	16.33	371.0	15.17
		95.1	431.3	17.79	420.4	17.27	410.5	16.92	402.6	16.63	393.7	16.33	371.0	15.17
	95	39.6	431.3	17.79	420.4	17.27	410.5	16.92	402.6	16.33	393.7	15.75	371.0	14.58
		76.2	431.3	17.21	420.4	16.86	410.5	16.63	402.6	16.04	393.7	15.46	371.0	14.00
		95.1	431.3	17.21	420.4	16.68	410.5	16.33	402.6	15.75	393.7	15.17	371.0	14.00
	104	39.6	431.3	17.21	420.4	16.68	410.5	16.33	402.6	15.75	393.7	15.17	371.0	13.71
		76.2	431.3	16.63	420.4	16.28	410.5	15.75	402.6	15.17	393.7	14.58	371.0	13.13
		95.1	431.3	16.33	420.4	15.98	410.5	15.75	402.6	15.17	393.7	14.58	371.0	13.13
	113	39.6	431.3	16.62	420.4	16.10	410.5	15.75	402.6	15.17	393.7	14.58	371.0	12.83
		76.2	431.3	16.04	420.4	15.69	410.5	14.88	402.6	14.29	393.7	13.71	371.0	12.25
		95.1	431.3	15.46	420.4	15.28	410.5	15.17	402.6	14.58	393.7	14.00	371.0	12.25
120	23	39.6	150.0	18.66	148.7	17.59	147.9	16.40	146.2	15.72	147.3	15.27	143.4	13.67
		76.2	169.8	19.92	168.3	18.91	167.4	17.80	165.4	17.06	166.7	16.57	162.2	14.83
		95.1	187.5	21.18	185.9	20.23	184.9	19.20	182.7	18.40	184.2	17.87	179.2	16.00
	32	39.6	260.7	25.15	254.5	24.38	249.1	23.59	244.0	22.60	243.8	21.95	232.9	19.66
		76.2	266.8	25.39	260.5	24.63	254.9	23.86	249.7	22.86	249.5	22.21	238.4	19.88
		95.1	270.9	25.39	264.5	24.63	258.8	23.86	253.6	22.86	253.3	22.21	242.0	19.88
	41	39.6	375.1	27.08	368.6	26.40	359.9	25.73	351.2	24.65	340.3	23.94	321.5	21.44
		76.2	380.4	27.55	371.3	26.89	360.1	26.25	351.2	25.16	340.3	24.43	321.5	21.88
		95.1	382.6	27.72	369.2	27.07	360.1	26.44	351.2	25.34	340.3	24.61	321.5	22.03
	50	39.6	376.7	24.30	369.7	23.64	360.0	23.13	351.2	22.39	340.3	21.60	321.5	19.47
		76.2	383.8	24.63	375.5	23.98	364.0	23.48	355.1	22.49	343.8	21.55	325.0	19.54
		95.1	385.9	24.54	374.3	23.98	365.5	23.57	356.6	22.59	345.3	21.64	326.5	20.20
	59	39.6	378.2	21.53	370.8	20.88	360.1	20.53	351.2	20.13	340.3	19.25	321.5	17.50
		76.2	387.1	21.70	379.7	21.06	368.0	20.71	359.1	19.83	347.2	18.67	328.4	17.21
		95.1	389.1	21.35	379.4	20.88	371.0	20.71	362.1	19.83	350.2	18.67	331.4	18.38
	68	39.6	389.1	19.31	381.6	18.55	370.0	18.08	360.1	17.79	348.2	17.50	329.4	16.57
		76.2	399.0	19.31	390.5	18.84	377.9	18.38	369.0	18.08	357.1	17.44	337.3	16.33
		95.1	400.9	19.13	390.3	18.67	380.9	18.38	371.0	18.08	359.1	17.50	339.3	16.92
	77	39.6	405.6	18.20	393.7	17.38	380.9	17.03	373.0	16.63	363.1	16.33	343.3	15.17
		76.2	406.6	17.91	393.7	17.27	380.9	16.92	373.0	16.33	363.1	16.04	343.3	14.88
		95.1	407.6	17.27	393.7	16.80	380.9	16.63	373.0	16.33	363.1	15.75	343.3	14.88
	86	39.6	407.6	17.33	393.7	16.51	380.9	16.04	373.0	15.46	363.1	15.17	343.3	14.00
		76.2	407.6	16.74	393.7	16.10	380.9	15.75	373.0	15.17	363.1	14.58	343.3	13.71
		95.1	407.6	16.22	393.7	15.75	380.9	15.46	373.0	15.17	363.1	14.58	343.3	13.42
	95	39.6	407.6	16.45	393.7	15.63	380.9	15.17	373.0	14.58	363.1	14.00	343.3	12.83
		76.2	407.6	15.52	393.7	15.05	380.9	14.58	373.0	14.00	363.1	13.42	343.3	12.54
		95.1	407.6	15.34	393.7	14.93	380.9	14.58	373.0	14.00	363.1	13.42	343.3	12.25
	104	39.6	407.6	15.87	393.7	14.88	380.9	14.29	373.0	13.71	363.1	13.13	343.3	11.96
		76.2	407.6	14.64	393.7	14.18	380.9	13.71	373.0	13.13	363.1	12.54	343.3	11.67
		95.1	407.6	14.47	393.7	14.00	380.9	13.71	373.0	13.13	363.1	12.54	343.3	11.38
	113	39.6	407.6	15.28	393.7	14.12	380.9	13.42	373.0	12.83	363.1	12.25	343.3	11.08
		76.2	407.6	13.77	393.7	13.30	380.9	12.83	373.0	12.25	363.1	11.67	343.3	10.79
		95.1	407.6	13.59	393.7	13.07	380.9	12.83	373.0	12.25	363.1	11.67	343.3	10.50

TC = Total Heating Capacity (MBh).
PI = Power input (KW).

Power input (KW) includes compressor(s) and controls.
Test condition based on 25 feet of equivalent refrigerant piping and no change in elevation between indoor unit and water source unit.

Due to our policy of continuous product innovation, some specifications may change without notification.
©LG Electronics U.S.A., Inc., Englewood Cliffs, NJ. All rights reserved. "LG" is a registered trademark of LG Corp.

PERFORMANCE DATA

Heating Capacity—ARWB290DA2 / ARWN290DA2 (460 Volt)

Table 27b: Heating Capacity ARWB290DA2 / ARWN290DA2

Combination Ratio (%) (Capacity index)	Inlet Water Temperature (°F)	Water Flow Rate (gpm)	Indoor Unit Entering Air Wet Bulb Temperature °F											
			61		65		68		70		72		75	
			TC MBh	PI kW	TC MBh	PI kW	TC MBh	PI kW	TC MBh	PI kW	TC MBh	PI kW	TC MBh	PI kW
110	23	39.6	141.8	18.88	141.0	17.59	140.2	16.40	138.7	15.72	138.8	15.27	135.9	13.67
		76.2	160.5	20.16	159.5	18.91	158.6	17.80	157.0	17.06	157.0	16.57	153.8	14.83
		95.1	177.3	21.45	176.2	20.23	175.2	19.20	173.4	18.40	173.5	17.87	169.9	16.00
	32	39.6	246.5	25.47	241.3	24.38	236.1	23.59	231.7	22.60	229.6	21.95	220.7	19.66
		76.2	252.3	25.72	246.9	24.63	241.6	23.86	237.1	22.86	235.0	22.21	225.9	19.88
		95.1	256.1	25.72	250.7	24.63	245.3	23.86	240.7	22.86	238.6	22.21	229.3	19.88
	41	39.6	358.7	27.43	349.9	26.40	341.1	25.73	333.4	24.65	320.5	23.94	304.7	21.44
		76.2	363.7	27.91	352.5	26.89	341.3	26.25	333.4	25.16	320.5	24.43	304.7	21.88
		95.1	365.8	28.09	353.5	27.07	341.3	26.44	333.4	25.34	320.5	24.61	304.7	22.03
	50	39.6	360.2	24.54	350.9	23.73	341.2	23.22	333.4	22.39	320.5	21.60	304.7	19.47
		76.2	365.6	24.72	354.7	23.98	343.3	23.48	335.4	22.49	322.5	21.55	306.2	19.54
		95.1	367.7	24.72	356.2	23.98	344.3	23.43	335.9	22.44	323.0	21.64	307.2	19.77
	59	39.6	361.6	21.64	352.0	21.06	341.3	20.71	333.4	20.13	320.5	19.25	304.7	17.50
		76.2	367.6	21.53	356.9	21.06	345.3	20.71	337.3	19.83	324.5	18.67	307.7	17.21
		95.1	369.5	21.35	358.9	20.88	347.2	20.42	338.3	19.54	325.5	18.67	309.6	17.50
	68	39.6	368.6	18.73	357.9	18.26	346.2	17.79	337.3	17.50	324.5	16.92	307.7	15.87
		76.2	376.5	18.90	362.8	18.26	350.2	17.79	342.3	17.50	328.4	16.63	312.6	15.75
		95.1	378.5	18.90	365.8	18.26	352.2	17.79	343.3	17.21	330.4	16.63	313.6	15.75
	77	39.6	378.9	16.98	367.0	16.33	352.2	16.04	344.3	15.46	332.4	14.88	314.6	13.71
		76.2	381.9	16.86	367.0	16.04	352.2	15.75	344.3	15.17	332.4	14.58	314.6	13.71
		95.1	383.8	16.86	367.0	16.10	352.2	15.46	344.3	15.17	332.4	14.29	314.6	13.42
	86	39.6	383.8	15.46	367.0	14.88	352.2	14.29	344.3	14.00	332.4	13.13	314.6	12.25
		76.2	383.8	15.17	367.0	14.58	352.2	14.00	344.3	13.71	332.4	12.83	314.6	11.96
		95.1	383.8	15.05	367.0	14.29	352.2	13.71	344.3	13.42	332.4	12.83	314.6	11.96
	95	39.6	383.8	14.58	367.0	13.71	352.2	13.13	344.3	12.54	332.4	11.96	314.6	11.08
		76.2	383.8	14.00	367.0	13.42	352.2	12.83	344.3	12.25	332.4	11.67	314.6	10.79
		95.1	383.8	13.65	367.0	13.13	352.2	12.54	344.3	12.25	332.4	11.67	314.6	10.79
	104	39.6	383.8	13.71	367.0	13.13	352.2	12.25	344.3	11.67	332.4	11.08	314.6	10.21
		76.2	383.8	13.13	367.0	12.54	352.2	11.67	344.3	11.38	332.4	10.79	314.6	9.92
		95.1	383.8	12.95	367.0	12.25	352.2	11.67	344.3	11.08	332.4	10.50	314.6	9.63
	113	39.6	383.8	12.83	367.0	12.54	352.2	11.38	344.3	10.79	332.4	10.21	314.6	9.33
		76.2	383.8	12.25	367.0	11.67	352.2	10.50	344.3	10.50	332.4	9.92	314.6	9.04
		95.1	383.8	12.25	367.0	11.38	352.2	10.79	344.3	9.92	332.4	9.33	314.6	8.46
100	23	39.6	134.0	18.88	133.3	17.82	132.5	16.40	131.3	15.72	130.2	15.03	127.9	13.67
		76.2	151.7	20.16	150.8	19.16	149.9	17.80	148.6	17.06	147.3	16.31	144.8	14.83
		95.1	167.6	21.45	166.6	20.50	165.6	19.20	164.2	18.40	162.8	17.60	159.9	16.00
	32	39.6	233.0	25.47	228.0	24.70	223.1	23.59	219.3	22.60	215.5	21.62	207.8	19.66
		76.2	238.4	25.72	233.4	24.96	228.3	23.86	224.4	22.86	220.5	21.87	212.7	19.88
		95.1	242.1	25.72	236.9	24.96	231.8	23.86	227.8	22.86	223.9	21.87	215.9	19.88
	41	39.6	343.3	27.43	331.2	26.75	322.3	25.73	315.6	24.65	300.7	23.58	286.9	21.44
		76.2	348.0	27.91	333.7	27.26	322.5	26.25	315.6	25.16	300.7	24.06	286.9	21.88
		95.1	350.0	28.09	334.6	27.44	322.5	26.44	315.6	25.34	300.7	24.24	286.9	22.03
	50	39.6	344.7	24.54	332.2	23.96	322.4	23.22	315.6	22.39	300.7	21.27	286.9	19.47
		76.2	348.0	24.98	333.9	24.24	322.5	23.48	315.6	22.49	300.7	21.36	286.9	19.54
		95.1	350.5	24.89	335.4	24.25	322.5	23.43	315.6	22.44	300.7	21.31	286.9	19.47
	59	39.6	346.1	21.64	333.2	21.18	322.5	20.71	315.6	20.13	300.7	18.96	286.9	17.50
		76.2	348.0	22.05	334.2	21.23	322.5	20.71	315.6	19.83	300.7	18.67	286.9	17.21
		95.1	351.0	21.70	336.1	21.06	322.5	20.42	315.6	19.54	300.7	18.38	286.9	16.92
	68	39.6	349.0	18.49	335.1	17.97	322.5	17.50	315.6	17.21	300.7	16.04	286.9	15.17
		76.2	354.0	18.84	336.1	18.03	322.5	17.50	315.6	16.92	300.7	15.75	286.9	14.58
		95.1	356.0	18.49	339.1	17.85	322.5	17.21	315.6	16.63	300.7	15.46	286.9	14.29
	77	39.6	353.2	16.10	340.3	15.52	322.5	14.88	315.6	14.29	300.7	13.42	286.9	12.25
		76.2	358.1	16.16	340.3	15.17	322.5	14.58	315.6	14.00	300.7	13.13	286.9	12.25
		95.1	360.1	15.81	340.3	15.05	322.5	14.29	315.6	13.71	300.7	13.13	286.9	11.96
	86	39.6	360.1	14.58	340.3	13.42	322.5	12.54	315.6	12.25	300.7	11.38	286.9	10.79
		76.2	360.1	14.29	340.3	13.13	322.5	12.43	315.6	11.96	300.7	11.38	286.9	10.50
		95.1	360.1	14.00	340.3	13.13	322.5	12.25	315.6	11.96	300.7	11.08	286.9	10.50
	95	39.6	360.1	13.42	340.3	12.25	322.5	11.08	315.6	10.79	300.7	10.21	286.9	9.33
		76.2	360.1	12.83	340.3	11.67	322.5	10.97	315.6	10.50	300.7	9.92	286.9	9.04
		95.1	360.1	12.83	340.3	11.67	322.5	10.79	315.6	10.50	300.7	9.92	286.9	9.04
	104	39.6	360.1	12.54	340.3	11.38	322.5	9.92	315.6	9.63	300.7	9.04	286.9	8.46
		76.2	360.1	11.96	340.3	10.79	322.5	9.80	315.6	9.33	300.7	8.75	286.9	8.17
		95.1	360.1	11.67	340.3	10.79	322.5	9.63	315.6	9.33	300.7	8.75	286.9	8.17
	113	39.6	360.1	11.67	340.3	10.50	322.5	8.75	315.6	8.46	300.7	7.88	286.9	7.58
		76.2	360.1	11.08	340.3	9.92	322.5	8.63	315.6	8.17	300.7	7.58	286.9	7.29
		95.1	360.1	10.50	340.3	9.92	322.5	8.46	315.6	8.17	300.7	7.58	286.9	7.29

TC = Total Heating Capacity (MBh).
PI = Power input (KW).

Power input (KW) includes compressor(s) and controls.
Test condition based on 25 feet of equivalent refrigerant piping and no change in elevation between indoor unit and water source unit.

LG

Due to our policy of continuous product innovation, some specifications may change without notification.
©LG Electronics U.S.A., Inc., Englewood Cliffs, NJ. All rights reserved. "LG" is a registered trademark of LG Corp.

PERFORMANCE DATA

Heating Capacity—ARWB290DA2 / ARWN290DA2 (460 Volt)

Table 27c: Heating Capacity ARWB290DA2 / ARWN290DA2

Combination Ratio (%) (Capacity index)	Inlet Water Temperature (°F)	Water Flow Rate (gpm)	Indoor Unit Entering Air Wet Bulb Temperature °F											
			61		65		68		70		72		75	
			TC MBh	PI kW	TC MBh	PI kW	TC MBh	PI kW	TC MBh	PI kW	TC MBh	PI kW	TC MBh	PI kW
90	23	39.6	126.7	17.54	122.7	16.00	119.1	14.09	118.2	13.44	117.4	12.95	115.1	11.62
		76.2	143.3	18.70	138.8	17.18	134.7	15.29	133.7	14.58	132.8	14.06	130.3	12.61
		95.1	158.3	19.87	153.3	18.36	148.8	16.49	147.7	15.73	146.7	15.16	143.9	13.60
	32	39.6	220.1	23.53	209.9	22.08	200.5	20.26	197.3	19.33	194.2	18.63	187.0	16.71
		76.2	225.3	23.76	214.8	22.31	205.2	20.50	201.9	19.55	198.7	18.84	191.4	16.90
		95.1	228.7	23.76	218.1	22.31	208.4	20.50	205.0	19.55	201.8	18.84	194.3	16.90
	41	39.6	309.5	25.32	299.2	23.89	289.7	22.10	283.9	21.08	271.1	20.32	258.2	18.22
		76.2	310.8	25.76	298.2	24.34	289.9	22.55	283.9	21.51	271.1	20.73	258.2	18.59
		95.1	312.6	25.92	299.1	24.50	289.9	22.72	283.9	21.67	271.1	20.88	258.2	18.73
	50	39.6	310.8	22.26	300.1	21.19	289.8	19.95	283.9	19.14	271.1	18.32	258.2	16.55
		76.2	310.3	22.33	298.5	21.27	289.9	20.03	283.9	19.21	271.1	18.24	258.2	16.59
		95.1	312.3	22.26	299.4	21.20	289.9	19.96	283.9	19.15	271.1	18.32	258.2	16.66
	59	39.6	312.1	19.19	301.0	18.49	289.9	17.79	283.9	17.21	271.1	16.33	258.2	14.88
		76.2	309.9	18.90	298.8	18.20	289.9	17.50	283.9	16.92	271.1	15.75	258.2	14.58
		95.1	311.9	18.61	299.7	17.91	289.9	17.21	283.9	16.63	271.1	15.75	258.2	14.58
	68	39.6	314.1	16.28	302.0	15.75	289.9	15.17	283.9	14.58	271.1	14.00	258.2	13.13
		76.2	312.9	16.28	299.7	15.58	289.9	14.88	283.9	14.29	271.1	13.42	258.2	12.54
		95.1	313.9	15.98	300.7	15.46	289.9	14.88	283.9	14.29	271.1	13.42	258.2	12.54
	77	39.6	320.5	14.18	306.7	13.42	289.9	12.83	283.9	12.25	271.1	11.67	258.2	10.79
		76.2	323.5	14.06	306.7	13.30	289.9	12.54	283.9	12.25	271.1	11.38	258.2	10.50
		95.1	324.5	13.71	306.7	13.01	289.9	12.54	283.9	11.96	271.1	11.38	258.2	10.50
	86	39.6	324.5	12.83	306.7	11.96	289.9	11.08	283.9	10.79	271.1	10.21	258.2	9.33
		76.2	324.5	12.54	306.7	11.67	289.9	10.79	283.9	10.50	271.1	9.92	258.2	9.33
		95.1	324.5	12.25	306.7	11.38	289.9	10.79	283.9	10.50	271.1	9.92	258.2	9.04
	95	39.6	324.5	11.67	306.7	10.79	289.9	9.92	283.9	9.63	271.1	9.04	258.2	8.46
		76.2	324.5	11.38	306.7	10.50	289.9	9.63	283.9	9.33	271.1	8.75	258.2	8.17
		95.1	324.5	11.08	306.7	10.21	289.9	9.33	283.9	9.04	271.1	8.75	258.2	8.17
	104	39.6	324.5	10.79	306.7	9.92	289.9	8.75	283.9	8.46	271.1	8.17	258.2	7.58
		76.2	324.5	10.21	306.7	9.63	289.9	8.46	283.9	8.17	271.1	7.88	258.2	7.29
		95.1	324.5	10.21	306.7	9.63	289.9	8.46	283.9	8.17	271.1	7.88	258.2	7.29
	113	39.6	324.5	9.92	306.7	9.04	289.9	7.58	283.9	7.29	271.1	7.29	258.2	6.71
		76.2	324.5	9.04	306.7	8.75	289.9	7.29	283.9	7.00	271.1	7.00	258.2	6.42
		95.1	324.5	9.33	306.7	9.04	289.9	7.58	283.9	7.29	271.1	7.00	258.2	6.42
80	23	39.6	119.7	12.57	112.1	12.07	106.1	11.55	105.0	11.16	104.5	10.64	102.3	9.80
		76.2	135.4	13.64	126.8	13.10	120.0	12.53	118.8	12.11	118.3	11.55	115.8	10.63
		95.1	149.6	14.71	140.1	14.13	132.6	13.52	131.2	13.06	130.6	12.45	127.9	11.46
	32	39.6	208.0	18.07	191.8	17.36	178.6	16.61	175.3	16.05	172.9	15.30	166.3	14.09
		76.2	212.9	18.28	196.3	17.56	182.8	16.80	179.4	16.24	177.0	15.48	170.2	14.25
		95.1	216.1	18.28	199.3	17.56	185.6	16.80	182.1	16.24	179.7	15.48	172.8	14.25
	41	39.6	286.4	19.71	270.4	18.94	258.1	18.12	252.3	17.51	241.4	16.69	229.5	15.36
		76.2	288.9	20.11	272.5	19.32	258.2	18.49	252.3	17.86	241.4	17.03	229.5	15.68
		95.1	288.9	20.26	272.0	19.46	258.2	18.62	252.3	17.99	241.4	17.15	229.5	15.79
	50	39.6	287.6	18.02	271.2	17.20	258.1	16.35	252.3	15.90	241.4	15.05	229.5	13.95
		76.2	288.9	17.93	272.3	17.10	258.2	16.39	252.3	15.93	241.4	15.08	229.5	13.96
		95.1	288.9	17.86	272.0	17.17	258.2	16.46	252.3	15.85	241.4	14.99	229.5	13.87
	59	39.6	288.9	16.33	272.0	15.46	258.2	14.58	252.3	14.29	241.4	13.42	229.5	12.54
		76.2	288.9	15.75	272.0	14.88	258.2	14.29	252.3	14.00	241.4	13.13	229.5	12.25
		95.1	288.9	15.46	272.0	14.88	258.2	14.29	252.3	13.71	241.4	12.83	229.5	11.96
	68	39.6	288.9	13.71	272.0	13.13	258.2	12.54	252.3	12.25	241.4	11.67	229.5	10.79
		76.2	288.9	13.42	272.0	12.83	258.2	12.54	252.3	11.96	241.4	11.38	229.5	10.50
		95.1	288.9	13.13	272.0	12.54	258.2	12.25	252.3	11.96	241.4	11.08	229.5	10.50
	77	39.6	288.9	12.25	272.0	11.38	258.2	10.79	252.3	10.50	241.4	9.92	229.5	9.33
		76.2	288.9	11.96	272.0	11.08	258.2	10.79	252.3	10.21	241.4	9.63	229.5	9.04
		95.1	288.9	11.67	272.0	11.08	258.2	10.50	252.3	10.21	241.4	9.63	229.5	9.04
	86	39.6	288.9	10.79	272.0	10.21	258.2	9.63	252.3	9.33	241.4	8.75	229.5	8.17
		76.2	288.9	10.50	272.0	9.92	258.2	9.33	252.3	9.04	241.4	8.46	229.5	7.88
		95.1	288.9	10.50	272.0	9.92	258.2	9.33	252.3	9.04	241.4	8.46	229.5	7.88
	95	39.6	288.9	9.92	272.0	9.33	258.2	8.46	252.3	8.17	241.4	7.88	229.5	7.29
		76.2	288.9	9.63	272.0	9.04	258.2	8.17	252.3	8.17	241.4	7.58	229.5	7.29
		95.1	288.9	9.63	272.0	8.75	258.2	8.17	252.3	7.88	241.4	7.58	229.5	7.00
	104	39.6	288.9	9.33	272.0	8.46	258.2	7.58	252.3	7.58	241.4	7.00	229.5	6.71
		76.2	288.9	8.75	272.0	8.17	258.2	7.58	252.3	7.29	241.4	7.00	229.5	6.42
		95.1	288.9	8.75	272.0	8.17	258.2	7.29	252.3	7.29	241.4	7.00	229.5	6.42
	113	39.6	288.9	8.75	272.0	7.58	258.2	6.71	252.3	7.00	241.4	6.13	229.5	6.12
		76.2	288.9	7.88	272.0	7.29	258.2	7.00	252.3	6.42	241.4	6.42	229.5	5.54
		95.1	288.9	7.88	272.0	7.58	258.2	6.42	252.3	6.71	241.4	6.42	229.5	5.83

TC = Total Heating Capacity (MBh).
PI = Power input (KW).

Power input (KW) includes compressor(s) and controls.
Test condition based on 25 feet of equivalent refrigerant piping and no change in elevation between indoor unit and water source unit.

Due to our policy of continuous product innovation, some specifications may change without notification.
©LG Electronics U.S.A., Inc., Englewood Cliffs, NJ. All rights reserved. "LG" is a registered trademark of LG Corp.

PERFORMANCE DATA

Heating Capacity—ARWB290DA2 / ARWN290DA2 (460 Volt)

Table 27d: Heating Capacity ARWB290DA2 / ARWN290DA2

Combination Ratio (%) (Capacity index)	Inlet Water Temperature (°F)	Water Flow Rate (gpm)	Indoor Unit Entering Air Wet Bulb Temperature °F											
			61		65		68		70		72		75	
			TC MBh	PI kW	TC MBh	PI kW	TC MBh	PI kW	TC MBh	PI kW	TC MBh	PI kW	TC MBh	PI kW
70	23	39.6	104.5	10.77	98.2	10.25	92.6	9.93	91.8	9.34	91.2	9.02	89.6	8.20
		76.2	118.3	11.69	111.1	11.12	104.8	10.78	103.9	10.14	103.2	9.79	101.3	8.90
		95.1	130.7	12.61	122.8	12.00	115.8	11.63	114.8	10.93	114.0	10.56	111.9	9.60
	32	39.6	181.7	15.49	168.1	14.74	156.0	14.28	153.3	13.43	151.0	12.97	145.5	11.79
		76.2	185.9	15.67	172.0	14.91	159.7	14.45	156.9	13.59	154.5	13.12	148.9	11.93
		95.1	188.8	15.67	174.6	14.91	162.1	14.45	159.3	13.59	156.9	13.12	151.2	11.93
	41	39.6	250.1	16.89	237.0	16.08	225.4	15.58	220.6	14.65	210.7	14.15	200.8	12.86
		76.2	252.3	17.24	238.8	16.41	225.6	15.90	220.6	14.95	210.7	14.44	200.8	13.13
		95.1	252.3	17.36	238.4	16.52	225.6	16.01	220.6	15.06	210.7	14.54	200.8	13.22
	50	39.6	251.2	15.45	237.7	14.60	225.5	14.06	220.6	13.30	210.7	12.76	200.8	11.68
		76.2	252.3	15.33	238.6	14.47	225.6	13.93	220.6	13.31	210.7	12.76	200.8	11.67
		95.1	252.3	15.39	238.4	14.53	225.6	13.99	220.6	13.36	210.7	12.67	200.8	11.71
	59	39.6	252.3	14.00	238.4	13.13	225.6	12.54	220.6	11.96	210.7	11.38	200.8	10.50
		76.2	252.3	13.42	238.4	12.54	225.6	11.96	220.6	11.67	210.7	11.08	200.8	10.21
		95.1	252.3	13.42	238.4	12.54	225.6	11.96	220.6	11.67	210.7	10.79	200.8	10.21
	68	39.6	252.3	11.67	238.4	11.08	225.6	10.79	220.6	10.50	210.7	9.92	200.8	9.33
		76.2	252.3	11.38	238.4	10.79	225.6	10.50	220.6	10.21	210.7	9.63	200.8	9.04
		95.1	252.3	11.38	238.4	10.79	225.6	10.50	220.6	9.92	210.7	9.63	200.8	8.75
	77	39.6	252.3	10.50	238.4	9.92	225.6	9.33	220.6	9.04	210.7	8.46	200.8	7.88
		76.2	252.3	10.21	238.4	9.63	225.6	9.04	220.6	8.75	210.7	8.46	200.8	7.88
		95.1	252.3	9.92	238.4	9.33	225.6	9.04	220.6	8.75	210.7	8.17	200.8	7.88
	86	39.6	252.3	9.33	238.4	8.75	225.6	8.17	220.6	7.88	210.7	7.58	200.8	7.00
		76.2	252.3	9.04	238.4	8.46	225.6	7.88	220.6	7.88	210.7	7.29	200.8	7.00
		95.1	252.3	9.04	238.4	8.46	225.6	7.88	220.6	7.58	210.7	7.29	200.8	7.00
	95	39.6	252.3	8.46	238.4	7.88	225.6	7.29	220.6	7.29	210.7	6.71	200.8	6.42
		76.2	252.3	8.17	238.4	7.58	225.6	7.29	220.6	7.00	210.7	6.71	200.8	6.13
		95.1	252.3	8.17	238.4	7.58	225.6	7.00	220.6	7.00	210.7	6.71	200.8	6.13
	104	39.6	252.3	7.88	238.4	7.29	225.6	6.71	220.6	6.42	210.7	6.13	200.8	5.83
		76.2	252.3	7.58	238.4	7.00	225.6	6.42	220.6	6.42	210.7	6.13	200.8	5.54
		95.1	252.3	7.58	238.4	7.00	225.6	6.42	220.6	6.13	210.7	5.83	200.8	5.54
	113	39.6	252.3	7.29	238.4	6.71	225.6	6.12	220.6	5.54	210.7	5.54	200.8	5.25
		76.2	252.3	7.00	238.4	6.42	225.6	5.54	220.6	5.83	210.7	5.54	200.8	4.96
		95.1	252.3	7.00	238.4	6.42	225.6	5.83	220.6	5.25	210.7	4.96	200.8	4.96
60	23	39.6	89.8	8.75	83.9	8.43	79.6	8.09	78.6	7.52	78.4	7.40	76.8	6.61
		76.2	101.6	9.50	95.0	9.15	90.1	8.77	89.0	8.16	88.7	8.03	86.9	7.17
		95.1	112.2	10.24	104.9	9.86	99.6	9.46	98.3	8.80	98.0	8.66	96.0	7.73
	32	39.6	156.0	12.59	143.6	12.12	134.1	11.63	131.3	10.81	129.7	10.64	124.7	9.50
		76.2	159.7	12.73	147.0	12.26	137.3	11.76	134.4	10.94	132.7	10.77	127.6	9.61
		95.1	162.1	12.73	149.3	12.26	139.4	11.76	136.4	10.94	134.8	10.77	129.6	9.61
	41	39.6	214.8	13.73	202.6	13.22	193.8	12.68	188.9	11.79	181.0	11.61	172.1	10.36
		76.2	216.6	14.01	204.1	13.49	193.9	12.94	188.9	12.03	181.0	11.85	172.1	10.57
		95.1	216.6	14.11	203.8	13.59	193.9	13.03	188.9	12.12	181.0	11.93	172.1	10.65
	50	39.6	215.7	12.55	203.2	12.01	193.8	11.44	188.9	10.71	181.0	10.47	172.1	9.41
		76.2	216.6	12.54	203.9	11.99	193.9	11.43	188.9	10.83	181.0	10.44	172.1	9.52
		95.1	216.6	12.60	203.8	11.90	193.9	11.33	188.9	10.73	181.0	10.34	172.1	9.41
	59	39.6	216.6	11.38	203.8	10.79	193.9	10.21	188.9	9.63	181.0	9.33	172.1	8.46
		76.2	216.6	11.08	203.8	10.50	193.9	9.92	188.9	9.63	181.0	9.04	172.1	8.46
		95.1	216.6	11.08	203.8	10.21	193.9	9.63	188.9	9.33	181.0	8.75	172.1	8.17
	68	39.6	216.6	9.92	203.8	9.33	193.9	8.75	188.9	8.46	181.0	8.17	172.1	7.58
		76.2	216.6	9.63	203.8	9.04	193.9	8.46	188.9	8.17	181.0	7.88	172.1	7.29
		95.1	216.6	9.63	203.8	9.04	193.9	8.46	188.9	8.17	181.0	7.88	172.1	7.29
	77	39.6	216.6	8.75	203.8	8.17	193.9	7.58	188.9	7.58	181.0	7.00	172.1	6.71
		76.2	216.6	8.46	203.8	7.88	193.9	7.58	188.9	7.29	181.0	7.00	172.1	6.42
		95.1	216.6	8.46	203.8	7.88	193.9	7.29	188.9	7.29	181.0	7.00	172.1	6.42
	86	39.6	216.6	7.88	203.8	7.29	193.9	7.00	188.9	6.71	181.0	6.42	172.1	6.13
		76.2	216.6	7.58	203.8	7.00	193.9	6.71	188.9	6.42	181.0	6.13	172.1	5.83
		95.1	216.6	7.58	203.8	7.00	193.9	6.71	188.9	6.42	181.0	6.13	172.1	5.83
	95	39.6	216.6	7.00	203.8	6.71	193.9	6.13	188.9	6.13	181.0	5.83	172.1	5.54
		76.2	216.6	7.00	203.8	6.42	193.9	6.13	188.9	5.83	181.0	5.54	172.1	5.25
		95.1	216.6	7.00	203.8	6.42	193.9	5.83	188.9	5.83	181.0	5.54	172.1	5.25
	104	39.6	216.6	6.42	203.8	6.13	193.9	5.54	188.9	5.54	181.0	5.25	172.1	4.96
		76.2	216.6	6.42	203.8	5.83	193.9	5.54	188.9	5.25	181.0	4.96	172.1	4.96
		95.1	216.6	6.42	203.8	5.83	193.9	5.54	188.9	5.25	181.0	4.96	172.1	4.96
	113	39.6	216.6	5.83	203.8	5.54	193.9	4.96	188.9	4.96	181.0	4.67	172.1	4.37
		76.2	216.6	5.83	203.8	5.25	193.9	4.96	188.9	4.67	181.0	4.37	172.1	4.67
		95.1	216.6	5.83	203.8	5.25	193.9	5.25	188.9	4.67	181.0	4.37	172.1	4.67

TC = Total Heating Capacity (MBh).
PI = Power input (KW).

Power input (KW) includes compressor(s) and controls.
Test condition based on 25 feet of equivalent refrigerant piping and no change in elevation between indoor unit and water source unit.

Due to our policy of continuous product innovation, some specifications may change without notification.
©LG Electronics U.S.A., Inc., Englewood Cliffs, NJ. All rights reserved. "LG" is a registered trademark of LG Corp.

PERFORMANCE DATA

Heating Capacity—ARWB290DA2 / ARWN290DA2 (460 Volt)

Table 27e: Heating Capacity ARWB290DA2 / ARWN290DA2

Combination Ratio (%) (Capacity index)	Inlet Water Temperature (°F)	Water Flow Rate (gpm)	Indoor Unit Entering Air Wet Bulb Temperature °F											
			61		65		68		70		72		75	
			TC	PI	TC	PI	TC	PI	TC	PI	TC	PI	TC	PI
			MBh	kW	MBh	kW	MBh	kW	MBh	kW	MBh	kW	MBh	kW
50	23	39.6	74.6	6.96	70.1	6.61	66.2	6.24	65.5	5.92	65.1	5.55	64.0	5.24
		76.2	84.4	7.55	79.3	7.17	74.9	6.77	74.1	6.43	73.7	6.02	72.4	5.69
		95.1	93.3	8.14	87.6	7.73	82.8	7.30	81.8	6.93	81.4	6.50	80.0	6.13
	32	39.6	129.7	10.00	119.9	9.50	111.5	8.97	109.3	8.52	107.7	7.98	103.9	7.53
		76.2	132.7	10.12	122.7	9.61	114.2	9.07	111.9	8.62	110.3	8.08	106.3	7.62
		95.1	134.7	10.12	124.6	9.61	115.9	9.07	113.6	8.62	111.9	8.08	108.0	7.62
	41	39.6	178.5	10.91	169.1	10.36	161.2	9.78	157.3	9.29	150.4	8.71	143.4	8.22
		76.2	180.0	11.13	170.4	10.57	161.3	9.98	157.3	9.48	150.4	8.88	143.4	8.39
		95.1	180.0	11.21	170.2	10.65	161.3	10.05	157.3	9.55	150.4	8.95	143.4	8.45
	50	39.6	179.3	9.98	169.6	9.41	161.2	8.83	157.3	8.44	150.4	7.85	143.4	7.46
		76.2	180.0	9.94	170.3	9.37	161.3	8.78	157.3	8.39	150.4	7.94	143.4	7.40
		95.1	180.0	9.98	170.2	9.41	161.3	8.82	157.3	8.42	150.4	7.83	143.4	7.43
	59	39.6	180.0	9.04	170.2	8.46	161.3	7.88	157.3	7.58	150.4	7.00	143.4	6.71
		76.2	180.0	8.75	170.2	8.17	161.3	7.58	157.3	7.29	150.4	7.00	143.4	6.42
		95.1	180.0	8.75	170.2	8.17	161.3	7.58	157.3	7.29	150.4	6.71	143.4	6.42
	68	39.6	180.0	7.88	170.2	7.29	161.3	7.00	157.3	6.71	150.4	6.42	143.4	5.83
		76.2	180.0	7.58	170.2	7.00	161.3	6.71	157.3	6.42	150.4	6.13	143.4	5.83
		95.1	180.0	7.58	170.2	7.00	161.3	6.71	157.3	6.42	150.4	6.13	143.4	5.83
	77	39.6	180.0	7.00	170.2	6.42	161.3	6.13	157.3	5.83	150.4	5.54	143.4	5.25
		76.2	180.0	6.71	170.2	6.42	161.3	5.83	157.3	5.83	150.4	5.54	143.4	5.25
		95.1	180.0	6.71	170.2	6.42	161.3	5.83	157.3	5.83	150.4	5.54	143.4	5.25
	86	39.6	180.0	6.42	170.2	5.83	161.3	5.54	157.3	5.25	150.4	5.25	143.4	4.96
		76.2	180.0	6.13	170.2	5.54	161.3	5.25	157.3	5.25	150.4	4.96	143.4	4.67
		95.1	180.0	6.13	170.2	5.54	161.3	5.25	157.3	5.25	150.4	4.96	143.4	4.67
	95	39.6	180.0	5.83	170.2	5.25	161.3	4.96	157.3	4.96	150.4	4.67	143.4	4.38
		76.2	180.0	5.54	170.2	5.25	161.3	4.96	157.3	4.67	150.4	4.67	143.4	4.38
		95.1	180.0	5.54	170.2	5.25	161.3	4.96	157.3	4.67	150.4	4.67	143.4	4.38
	104	39.6	180.0	5.25	170.2	4.96	161.3	4.67	157.3	4.38	150.4	4.38	143.4	4.08
		76.2	180.0	4.96	170.2	4.67	161.3	4.38	157.3	4.38	150.4	4.08	143.4	4.08
		95.1	180.0	4.96	170.2	4.67	161.3	4.38	157.3	4.38	150.4	4.08	143.4	4.08
	113	39.6	180.0	4.67	170.2	4.67	161.3	4.38	157.3	3.79	150.4	4.08	143.4	3.79
		76.2	180.0	4.37	170.2	4.08	161.3	3.79	157.3	4.08	150.4	3.50	143.4	3.79
		95.1	180.0	4.37	170.2	4.08	161.3	3.79	157.3	4.08	150.4	3.50	143.4	3.79

TC = Total Heating Capacity (MBh).
PI = Power input (KW).
Power input (KW) includes compressor(s) and controls.
Test condition based on 25 feet of equivalent refrigerant piping and no change in elevation between indoor unit and water source unit.

Due to our policy of continuous product innovation, some specifications may change without notification.
©LG Electronics U.S.A., Inc., Englewood Cliffs, NJ. All rights reserved. "LG" is a registered trademark of LG Corp.

Table 28a: Heating Capacity ARWB390DA2 / ARWN390DA2

Combination Ratio (%) (Capacity index)	Inlet Water Temperature (°F)	Water Flow Rate (gpm)	Indoor Unit Entering Air Wet Bulb Temperature °F											
			61		65		68		70		72		75	
			TC	PI	TC	PI	TC	PI	TC	PI	TC	PI	TC	PI
			MBh	kW	MBh	kW	MBh	kW	MBh	kW	MBh	kW	MBh	kW
130	23	52.8	210.4	24.95	208.6	23.52	207.5	21.93	204.7	21.32	207.2	20.72	201.7	18.58
		101.6	238.0	26.64	236.0	25.28	234.7	23.80	231.6	23.14	234.5	22.49	228.3	20.16
		126.8	263.0	28.32	260.7	27.05	259.3	25.67	255.9	24.95	259.1	24.25	252.1	21.75
	32	52.8	365.6	33.63	357.0	32.59	349.4	31.54	341.8	30.66	343.0	29.80	327.7	26.72
		101.6	374.2	33.96	365.3	32.94	357.6	31.90	349.8	31.02	351.0	30.14	335.3	27.03
		126.8	379.9	33.96	370.9	32.94	363.1	31.90	355.1	31.02	356.4	30.14	340.5	27.03
	41	52.8	524.9	36.21	516.2	35.29	504.8	34.40	491.9	33.44	478.7	32.50	452.3	29.14
		101.6	532.3	36.84	520.1	35.96	505.1	35.10	491.9	34.12	478.7	33.17	452.3	29.74
		126.8	535.4	37.07	521.6	36.20	505.1	35.35	491.9	34.37	478.7	33.40	452.3	29.95
	50	52.8	527.1	32.73	517.8	31.73	504.9	31.16	491.9	30.37	478.7	29.32	452.3	26.47
		101.6	539.3	32.46	527.6	31.82	513.0	31.39	499.8	30.32	485.9	29.26	459.6	26.37
		126.8	542.2	32.93	531.0	32.26	516.3	31.52	502.4	30.45	489.2	29.73	462.2	27.65
	59	52.8	529.2	29.25	519.3	28.16	505.1	27.92	491.9	27.30	478.7	26.13	452.3	23.79
		101.6	546.3	28.08	535.1	27.69	520.9	27.69	507.7	26.52	493.2	25.35	466.8	23.01
		126.8	549.0	28.78	540.4	28.31	527.5	27.69	513.0	26.52	499.8	26.05	472.1	25.35
	68	52.8	549.0	26.91	539.1	25.82	524.8	25.27	510.3	24.57	495.8	24.10	466.8	23.01
		101.6	566.1	26.13	556.2	25.74	540.7	25.19	526.2	24.96	513.0	24.73	484.0	22.23
		126.8	568.8	26.13	560.2	25.74	547.3	25.35	531.4	24.96	516.9	24.73	487.9	23.63
	77	52.8	575.0	25.74	560.5	25.04	547.3	24.57	536.7	24.18	524.8	23.79	494.5	22.23
		101.6	575.0	25.35	560.5	24.88	547.3	24.18	536.7	23.79	524.8	23.40	494.5	21.84
		126.8	575.0	24.96	560.5	24.26	547.3	23.79	536.7	23.40	524.8	23.01	494.5	21.45
	86	52.8	575.0	24.96	560.5	23.87	547.3	23.56	536.7	23.01	524.8	22.62	494.5	21.06
		101.6	575.0	24.18	560.5	23.71	547.3	23.01	536.7	22.62	524.8	21.84	494.5	20.28
		126.8	575.0	23.79	560.5	23.09	547.3	22.62	536.7	22.23	524.8	21.84	494.5	20.28
	95	52.8	575.0	23.79	560.5	23.09	547.3	22.62	536.7	21.84	524.8	21.06	494.5	19.50
		101.6	575.0	23.01	560.5	22.54	547.3	22.23	536.7	21.45	524.8	20.67	494.5	18.72
		126.8	575.0	23.01	560.5	22.31	547.3	21.84	536.7	21.06	524.8	20.28	494.5	18.72
	104	52.8	575.0	23.01	560.5	22.31	547.3	21.84	536.7	21.06	524.8	20.28	494.5	18.33
		101.6	575.0	22.23	560.5	21.76	547.3	21.06	536.7	20.28	524.8	19.50	494.5	17.55
		126.8	575.0	21.84	560.5	21.37	547.3	21.06	536.7	20.28	524.8	19.50	494.5	17.55
	113	52.8	575.0	22.23	560.5	21.53	547.3	21.06	536.7	20.28	524.8	19.50	494.5	17.16
		101.6	575.0	21.45	560.5	20.98	547.3	19.89	536.7	19.11	524.8	18.33	494.5	16.38
		126.8	575.0	20.67	560.5	20.44	547.3	20.28	536.7	19.50	524.8	18.72	494.5	16.38
120	23	52.8	200.0	24.95	198.3	23.52	197.2	21.93	194.8	21.02	196.4	20.41	191.1	18.28
		101.6	226.3	26.64	224.4	25.28	223.1	23.80	220.5	22.81	222.2	22.15	216.3	19.83
		126.8	250.0	28.32	247.8	27.05	246.5	25.67	243.5	24.60	245.5	23.89	238.9	21.39
	32	52.8	347.6	33.63	339.3	32.59	332.1	31.54	325.3	30.22	325.0	29.35	310.5	26.28
		101.6	355.7	33.96	347.2	32.94	339.8	31.90	332.9	30.57	332.6	29.69	317.7	26.58
		126.8	361.2	33.96	352.5	32.94	345.0	31.90	338.0	30.57	337.7	29.69	322.6	26.58
	41	52.8	500.1	36.21	491.3	35.29	479.8	34.40	468.1	32.96	453.6	32.02	428.6	28.67
		101.6	507.1	36.84	495.0	35.96	480.0	35.10	468.1	33.64	453.6	32.67	428.6	29.25
		126.8	510.0	37.07	492.1	36.20	480.0	35.35	468.1	33.88	453.6	32.91	428.6	29.46
	50	52.8	502.1	32.50	492.8	31.61	479.9	30.93	468.1	29.94	453.6	28.88	428.6	26.03
		101.6	511.6	32.93	500.5	32.06	485.3	31.39	473.4	30.08	458.3	28.81	433.2	26.13
		126.8	514.3	32.81	498.9	32.06	487.3	31.52	475.4	30.20	460.2	28.93	435.2	27.02
	59	52.8	504.1	28.78	494.2	27.92	480.0	27.46	468.1	26.91	453.6	25.74	428.6	23.40
		101.6	516.0	29.02	506.1	28.16	490.6	27.69	478.7	26.52	462.9	24.96	437.8	23.01
		126.8	518.6	28.55	505.8	27.92	494.5	27.69	482.6	26.52	466.8	24.96	441.8	24.57
	68	52.8	518.6	25.82	508.7	24.80	493.2	24.18	480.0	23.79	464.2	23.40	439.1	22.15
		101.6	531.8	25.82	520.6	25.19	503.7	24.57	491.9	24.18	476.1	23.32	449.7	21.84
		126.8	534.5	25.58	520.3	24.96	507.7	24.57	494.5	24.18	478.7	23.40	452.3	22.62
	77	52.8	540.7	24.34	524.8	23.24	507.7	22.78	497.2	22.23	484.0	21.84	457.6	20.28
		101.6	542.0	23.95	524.8	23.09	507.7	22.62	497.2	21.84	484.0	21.45	457.6	19.89
		126.8	543.3	23.09	524.8	22.46	507.7	22.23	497.2	21.84	484.0	21.06	457.6	19.89
	86	52.8	543.3	23.17	524.8	22.07	507.7	21.45	497.2	20.67	484.0	20.28	457.6	18.72
		101.6	543.3	22.39	524.8	21.53	507.7	21.06	497.2	20.28	484.0	19.50	457.6	18.33
		126.8	543.3	21.68	524.8	21.06	507.7	20.67	497.2	20.28	484.0	19.50	457.6	17.94
	95	52.8	543.3	22.00	524.8	20.90	507.7	20.28	497.2	19.50	484.0	18.72	457.6	17.16
		101.6	543.3	20.75	524.8	20.12	507.7	19.50	497.2	18.72	484.0	17.94	457.6	16.77
		126.8	543.3	20.51	524.8	19.97	507.7	19.50	497.2	18.72	484.0	17.94	457.6	16.38
	104	52.8	543.3	21.22	524.8	19.89	507.7	19.11	497.2	18.33	484.0	17.55	457.6	15.99
		101.6	543.3	19.58	524.8	18.95	507.7	18.33	497.2	17.55	484.0	16.77	457.6	15.60
		126.8	543.3	19.34	524.8	18.72	507.7	18.33	497.2	17.55	484.0	16.77	457.6	15.21
	113	52.8	543.3	20.44	524.8	18.88	507.7	17.94	497.2	17.16	484.0	16.38	457.6	14.82
		101.6	543.3	18.41	524.8	17.78	507.7	17.16	497.2	16.38	484.0	15.60	457.6	14.43
		126.8	543.3	18.17	524.8	17.47	507.7	17.16	497.2	16.38	484.0	15.60	457.6	14.04

TC = Total Heating Capacity (MBh).
PI = Power input (KW).

Power input (KW) includes compressor(s) and controls.
Test condition based on 25 feet of equivalent refrigerant piping and no change in elevation between indoor unit and water source unit.

LG

Due to our policy of continuous product innovation, some specifications may change without notification.
©LG Electronics U.S.A., Inc., Englewood Cliffs, NJ. All rights reserved. "LG" is a registered trademark of LG Corp.

PERFORMANCE DATA

Heating Capacity—ARWB390DA2 / ARWN390DA2 (460 Volt)

Table 28b: Heating Capacity ARWB390DA2 / ARWN390DA2

Combination Ratio (%) (Capacity index)	Inlet Water Temperature (°F)	Water Flow Rate (gpm)	Indoor Unit Entering Air Wet Bulb Temperature °F											
			61		65		68		70		72		75	
			TC MBh	PI kW	TC MBh	PI kW	TC MBh	PI kW	TC MBh	PI kW	TC MBh	PI kW	TC MBh	PI kW
110	23	52.8	189.1	25.25	187.9	23.52	186.9	21.93	184.9	21.02	185.0	20.41	181.1	18.28
		101.6	213.9	26.96	212.7	25.28	211.5	23.80	209.3	22.81	209.3	22.15	205.0	19.83
		126.8	236.3	28.68	234.9	27.05	233.6	25.67	231.2	24.60	231.2	23.89	226.4	21.39
	32	52.8	328.6	34.06	321.6	32.59	314.7	31.54	308.8	30.22	306.1	29.35	294.2	26.28
		101.6	336.3	34.39	329.2	32.94	322.1	31.90	316.0	30.57	313.3	29.69	301.1	26.58
		126.8	341.4	34.39	334.2	32.94	327.0	31.90	320.9	30.57	318.1	29.69	305.7	26.58
	41	52.8	478.2	36.68	466.4	35.29	454.7	34.40	444.4	32.96	427.3	32.02	406.2	28.67
		101.6	484.9	37.32	469.9	35.96	455.0	35.10	444.4	33.64	427.3	32.67	406.2	29.25
		126.8	487.6	37.56	471.3	36.20	455.0	35.35	444.4	33.88	427.3	32.91	406.2	29.46
	50	52.8	480.1	32.81	467.8	31.73	454.8	31.04	444.4	29.94	427.3	28.88	406.2	26.03
		101.6	487.4	33.05	472.8	32.06	457.6	31.39	447.0	30.08	429.9	28.81	408.1	26.13
		126.8	490.1	33.05	474.8	32.06	458.9	31.33	447.7	30.01	430.6	28.93	409.5	26.43
	59	52.8	482.1	28.94	469.2	28.16	455.0	27.69	444.4	26.91	427.3	25.74	406.2	23.40
		101.6	490.0	28.78	475.8	28.16	460.2	27.69	449.7	26.52	432.5	24.96	410.1	23.01
		126.8	492.6	28.55	478.4	27.92	462.9	27.30	451.0	26.13	433.9	24.96	412.8	23.40
	68	52.8	491.3	25.04	477.1	24.41	461.5	23.79	449.7	23.40	432.5	22.62	410.1	21.22
		101.6	501.8	25.27	483.7	24.41	466.8	23.79	456.3	23.40	437.8	22.23	416.7	21.06
		126.8	504.5	25.27	487.6	24.41	469.5	23.79	457.6	23.01	440.4	22.23	418.0	21.06
	77	52.8	505.1	22.70	489.2	21.84	469.5	21.45	458.9	20.67	443.1	19.89	419.4	18.33
		101.6	509.0	22.54	489.2	21.45	469.5	21.06	458.9	20.28	443.1	19.50	419.4	18.33
		126.8	511.7	22.54	489.2	21.53	469.5	20.67	458.9	20.28	443.1	19.11	419.4	17.94
	86	52.8	511.7	20.67	489.2	19.89	469.5	19.11	458.9	18.72	443.1	17.55	419.4	16.38
		101.6	511.7	20.28	489.2	19.50	469.5	18.72	458.9	18.33	443.1	17.16	419.4	15.99
		126.8	511.7	20.12	489.2	19.11	469.5	18.33	458.9	17.94	443.1	17.16	419.4	15.99
	95	52.8	511.7	19.50	489.2	18.33	469.5	17.55	458.9	16.77	443.1	15.99	419.4	14.82
		101.6	511.7	18.72	489.2	17.94	469.5	17.16	458.9	16.38	443.1	15.60	419.4	14.43
		126.8	511.7	18.25	489.2	17.55	469.5	16.77	458.9	16.38	443.1	15.60	419.4	14.43
	104	52.8	511.7	18.33	489.2	17.55	469.5	16.38	458.9	15.60	443.1	14.82	419.4	13.65
		101.6	511.7	17.55	489.2	16.77	469.5	15.60	458.9	15.21	443.1	14.43	419.4	13.26
		126.8	511.7	17.32	489.2	16.38	469.5	15.60	458.9	14.82	443.1	14.04	419.4	12.87
	113	52.8	511.7	17.16	489.2	16.77	469.5	15.21	458.9	14.43	443.1	13.65	419.4	12.48
		101.6	511.7	16.38	489.2	15.60	469.5	14.04	458.9	14.04	443.1	13.26	419.4	12.09
		126.8	511.7	16.38	489.2	15.21	469.5	14.43	458.9	13.26	443.1	12.48	419.4	11.31
100	23	52.8	178.7	25.25	177.6	23.83	176.6	21.93	175.1	21.02	173.6	20.10	170.5	18.28
		101.6	202.2	26.96	201.0	25.62	199.8	23.80	198.1	22.81	196.4	21.82	193.0	19.83
		126.8	223.4	28.68	222.0	27.41	220.7	25.67	218.8	24.60	217.0	23.53	213.2	21.39
	32	52.8	310.5	34.06	304.0	33.03	297.4	31.54	292.3	30.22	287.2	28.91	277.0	26.28
		101.6	317.8	34.39	311.1	33.38	304.4	31.90	299.2	30.57	293.9	29.24	283.5	26.58
		126.8	322.7	34.39	315.8	33.38	309.0	31.90	303.7	30.57	298.4	29.24	287.9	26.58
	41	52.8	457.7	36.68	441.5	35.77	429.7	34.40	420.7	32.96	400.9	31.53	382.4	28.67
		101.6	463.9	37.32	444.8	36.45	429.9	35.10	420.7	33.64	400.9	32.18	382.4	29.25
		126.8	466.6	37.56	446.1	36.69	429.9	35.35	420.7	33.88	400.9	32.41	382.4	29.46
	50	52.8	459.5	32.81	442.8	32.04	429.8	31.04	420.7	29.94	400.9	28.44	382.4	26.03
		101.6	463.9	33.40	445.1	32.42	429.9	31.39	420.7	30.08	400.9	28.57	382.4	26.13
		126.8	467.2	33.29	447.1	32.42	429.9	31.33	420.7	30.01	400.9	28.49	382.4	26.04
	59	52.8	461.3	28.94	444.1	28.31	429.9	27.69	420.7	26.91	400.9	25.35	382.4	23.40
		101.6	463.9	29.48	445.4	28.39	429.9	27.69	420.7	26.52	400.9	24.96	382.4	23.01
		126.8	467.9	29.02	448.1	28.16	429.9	27.30	420.7	26.13	400.9	24.57	382.4	22.62
	68	52.8	465.3	24.73	446.8	24.02	429.9	23.40	420.7	23.01	400.9	21.45	382.4	20.28
		101.6	471.9	25.19	448.1	24.10	429.9	23.40	420.7	22.62	400.9	21.06	382.4	19.50
		126.8	474.5	24.73	452.0	23.87	429.9	23.01	420.7	22.23	400.9	20.67	382.4	19.11
	77	52.8	470.8	21.53	453.6	20.75	429.9	19.89	420.7	19.11	400.9	17.94	382.4	16.38
		101.6	477.4	21.61	453.6	20.28	429.9	19.50	420.7	18.72	400.9	17.55	382.4	16.38
		126.8	480.0	21.14	453.6	20.12	429.9	19.11	420.7	18.33	400.9	17.55	382.4	15.99
	86	52.8	480.0	19.50	453.6	17.94	429.9	16.77	420.7	16.38	400.9	15.21	382.4	14.43
		101.6	480.0	19.11	453.6	17.55	429.9	16.61	420.7	15.99	400.9	15.21	382.4	14.04
		126.8	480.0	18.72	453.6	17.55	429.9	16.38	420.7	15.99	400.9	14.82	382.4	14.04
	95	52.8	480.0	17.94	453.6	16.38	429.9	14.82	420.7	14.43	400.9	13.65	382.4	12.48
		101.6	480.0	17.16	453.6	15.60	429.9	14.66	420.7	14.04	400.9	13.26	382.4	12.09
		126.8	480.0	17.16	453.6	15.60	429.9	14.43	420.7	14.04	400.9	13.26	382.4	12.09
	104	52.8	480.0	16.77	453.6	15.21	429.9	13.26	420.7	12.87	400.9	12.09	382.4	11.31
		101.6	480.0	15.99	453.6	14.43	429.9	13.10	420.7	12.48	400.9	11.70	382.4	10.92
		126.8	480.0	15.60	453.6	14.43	429.9	12.87	420.7	12.48	400.9	11.70	382.4	10.92
	113	52.8	480.0	15.60	453.6	14.04	429.9	11.70	420.7	11.31	400.9	10.53	382.4	10.14
		101.6	480.0	14.82	453.6	13.26	429.9	11.54	420.7	10.92	400.9	10.14	382.4	9.75
		126.8	480.0	14.04	453.6	13.26	429.9	11.31	420.7	10.92	400.9	10.14	382.4	9.75

TC = Total Heating Capacity (MBh).
PI = Power input (KW).

Power input (KW) includes compressor(s) and controls.
Test condition based on 25 feet of equivalent refrigerant piping and no change in elevation between indoor unit and water source unit.

Due to our policy of continuous product innovation, some specifications may change without notification.
©LG Electronics U.S.A., Inc., Englewood Cliffs, NJ. All rights reserved. "LG" is a registered trademark of LG Corp.

Table 28c: Heating Capacity ARWB390DA2 / ARWN390DA2

Combination Ratio (%) (Capacity index)	Inlet Water Temperature (°F)	Water Flow Rate (gpm)	Indoor Unit Entering Air Wet Bulb Temperature °F											
			61		65		68		70		72		75	
			TC MBh	PI kW	TC MBh	PI kW	TC MBh	PI kW	TC MBh	PI kW	TC MBh	PI kW	TC MBh	PI kW
90	23	52.8	168.8	23.45	163.5	21.39	158.7	18.84	157.5	17.97	156.4	17.32	153.5	15.53
		101.6	191.1	25.01	185.0	22.97	179.6	20.45	178.2	19.50	177.0	18.79	173.7	16.86
		126.8	211.1	26.57	204.4	24.55	198.4	22.05	196.9	21.03	195.5	20.27	191.9	18.18
	32	52.8	293.4	31.47	279.8	29.53	267.3	27.10	263.0	25.84	258.9	24.91	249.3	22.34
		101.6	300.3	31.77	286.4	29.84	273.6	27.41	269.1	26.14	264.9	25.19	255.2	22.60
		126.8	304.9	31.77	290.7	29.84	277.7	27.41	273.3	26.14	269.0	25.19	259.1	22.60
	41	52.8	412.6	33.86	398.8	31.95	386.2	29.55	378.5	28.19	361.3	27.17	344.2	24.37
		101.6	414.3	34.44	397.5	32.55	386.4	30.16	378.5	28.76	361.3	27.72	344.2	24.86
		126.8	416.8	34.65	398.8	32.76	386.4	30.37	378.5	28.97	361.3	27.92	344.2	25.04
	50	52.8	414.4	29.76	400.0	28.34	386.3	26.67	378.5	25.60	361.3	24.50	344.2	22.13
		101.6	413.7	29.86	397.9	28.44	386.4	26.78	378.5	25.69	361.3	24.39	344.2	22.18
		126.8	416.3	29.77	399.2	28.35	386.4	26.69	378.5	25.60	361.3	24.49	344.2	22.27
	59	52.8	416.1	25.66	401.2	24.73	386.4	23.79	378.5	23.01	361.3	21.84	344.2	19.89
		101.6	413.1	25.27	398.3	24.34	386.4	23.40	378.5	22.62	361.3	21.06	344.2	19.50
		126.8	415.7	24.88	399.6	23.95	386.4	23.01	378.5	22.23	361.3	21.06	344.2	19.50
	68	52.8	418.7	21.76	402.5	21.06	386.4	20.28	378.5	19.50	361.3	18.72	344.2	17.55
		101.6	417.1	21.76	399.6	20.83	386.4	19.89	378.5	19.11	361.3	17.94	344.2	16.77
		126.8	418.4	21.37	400.9	20.67	386.4	19.89	378.5	19.11	361.3	17.94	344.2	16.77
	77	52.8	427.3	18.95	408.8	17.94	386.4	17.16	378.5	16.38	361.3	15.60	344.2	14.43
		101.6	431.2	18.80	408.8	17.78	386.4	16.77	378.5	16.38	361.3	15.21	344.2	14.04
		126.8	432.5	18.33	408.8	17.39	386.4	16.77	378.5	15.99	361.3	15.21	344.2	14.04
	86	52.8	432.5	17.16	408.8	15.99	386.4	14.82	378.5	14.43	361.3	13.65	344.2	12.48
		101.6	432.5	16.77	408.8	15.60	386.4	14.43	378.5	14.04	361.3	13.26	344.2	12.48
		126.8	432.5	16.38	408.8	15.21	386.4	14.43	378.5	14.04	361.3	13.26	344.2	12.09
	95	52.8	432.5	15.60	408.8	14.43	386.4	13.26	378.5	12.87	361.3	12.09	344.2	11.31
		101.6	432.5	15.21	408.8	14.04	386.4	12.87	378.5	12.48	361.3	11.70	344.2	10.92
		126.8	432.5	14.82	408.8	13.65	386.4	12.48	378.5	12.09	361.3	11.70	344.2	10.92
	104	52.8	432.5	14.43	408.8	13.26	386.4	11.70	378.5	11.31	361.3	10.92	344.2	10.14
		101.6	432.5	13.65	408.8	12.87	386.4	11.31	378.5	10.92	361.3	10.53	344.2	9.75
		126.8	432.5	13.65	408.8	12.87	386.4	11.31	378.5	10.92	361.3	10.53	344.2	9.75
	113	52.8	432.5	13.26	408.8	12.09	386.4	10.14	378.5	9.75	361.3	9.75	344.2	8.97
		101.6	432.5	12.09	408.8	11.70	386.4	9.75	378.5	9.36	361.3	9.36	344.2	8.58
		126.8	432.5	12.48	408.8	12.09	386.4	10.14	378.5	9.75	361.3	9.36	344.2	8.58
80	23	52.8	159.5	16.80	149.4	16.14	141.4	15.44	139.9	14.93	139.3	14.23	136.4	13.10
		101.6	180.5	18.23	169.0	17.52	160.0	16.76	158.4	16.20	157.6	15.44	154.4	14.21
		126.8	199.4	19.67	186.7	18.89	176.7	18.08	174.9	17.47	174.1	16.65	170.5	15.33
	32	52.8	277.3	24.16	255.6	23.22	238.1	22.21	233.7	21.46	230.5	20.46	221.6	18.84
		101.6	283.8	24.44	261.6	23.48	243.7	22.47	239.1	21.71	235.9	20.70	226.8	19.05
		126.8	288.1	24.44	265.6	23.48	247.4	22.47	242.8	21.71	239.5	20.70	230.3	19.05
	41	52.8	381.8	26.35	360.5	25.32	344.0	24.22	336.3	23.41	321.8	22.31	305.9	20.54
		101.6	385.1	26.89	363.2	25.84	344.2	24.72	336.3	23.89	321.8	22.77	305.9	20.96
		126.8	385.1	27.09	362.6	26.02	344.2	24.90	336.3	24.06	321.8	22.93	305.9	21.11
	50	52.8	383.4	24.10	361.6	23.00	344.1	21.86	336.3	21.26	321.8	20.13	305.9	18.66
		101.6	385.1	23.98	362.9	22.86	344.2	21.91	336.3	21.30	321.8	20.16	305.9	18.67
		126.8	385.1	23.88	362.6	22.96	344.2	22.00	336.3	21.20	321.8	20.05	305.9	18.55
	59	52.8	385.1	21.84	362.6	20.67	344.2	19.50	336.3	19.11	321.8	17.94	305.9	16.77
		101.6	385.1	21.06	362.6	19.89	344.2	19.11	336.3	18.72	321.8	17.55	305.9	16.38
		126.8	385.1	20.67	362.6	19.89	344.2	19.11	336.3	18.33	321.8	17.16	305.9	15.99
	68	52.8	385.1	18.33	362.6	17.55	344.2	16.77	336.3	16.38	321.8	15.60	305.9	14.43
		101.6	385.1	17.94	362.6	17.16	344.2	16.77	336.3	15.99	321.8	15.21	305.9	14.04
		126.8	385.1	17.55	362.6	16.77	344.2	16.38	336.3	15.99	321.8	14.82	305.9	14.04
	77	52.8	385.1	16.38	362.6	15.21	344.2	14.43	336.3	14.04	321.8	13.26	305.9	12.48
		101.6	385.1	15.99	362.6	14.82	344.2	14.43	336.3	13.65	321.8	12.87	305.9	12.09
		126.8	385.1	15.60	362.6	14.82	344.2	14.04	336.3	13.65	321.8	12.87	305.9	12.09
	86	52.8	385.1	14.43	362.6	13.65	344.2	12.87	336.3	12.48	321.8	11.70	305.9	10.92
		101.6	385.1	14.04	362.6	13.26	344.2	12.48	336.3	12.09	321.8	11.31	305.9	10.53
		126.8	385.1	14.04	362.6	13.26	344.2	12.48	336.3	12.09	321.8	11.31	305.9	10.53
	95	52.8	385.1	13.26	362.6	12.48	344.2	11.31	336.3	10.92	321.8	10.53	305.9	9.75
		101.6	385.1	12.87	362.6	12.09	344.2	10.92	336.3	10.92	321.8	10.14	305.9	9.75
		126.8	385.1	12.87	362.6	11.70	344.2	10.92	336.3	10.53	321.8	10.14	305.9	9.36
	104	52.8	385.1	12.48	362.6	11.31	344.2	10.14	336.3	10.14	321.8	9.36	305.9	8.97
		101.6	385.1	11.70	362.6	10.92	344.2	10.14	336.3	9.75	321.8	9.36	305.9	8.58
		126.8	385.1	11.70	362.6	10.92	344.2	9.75	336.3	9.75	321.8	9.36	305.9	8.58
	113	52.8	385.1	11.70	362.6	10.14	344.2	8.97	336.3	9.36	321.8	8.19	305.9	8.19
		101.6	385.1	10.53	362.6	9.75	344.2	9.36	336.3	8.58	321.8	8.58	305.9	7.41
		126.8	385.1	10.53	362.6	10.14	344.2	8.58	336.3	8.97	321.8	8.58	305.9	7.80

TC = Total Heating Capacity (MBh).
PI = Power input (KW).

Power input (KW) includes compressor(s) and controls.
Test condition based on 25 feet of equivalent refrigerant piping and no change in elevation between indoor unit and water source unit.

Due to our policy of continuous product innovation, some specifications may change without notification.
©LG Electronics U.S.A., Inc., Englewood Cliffs, NJ. All rights reserved. "LG" is a registered trademark of LG Corp.

PERFORMANCE DATA

Heating Capacity—ARWB390DA2 / ARWN390DA2 (460 Volt)

Table 28d: Heating Capacity ARWB390DA2 / ARWN390DA2

Combination Ratio (%) (Capacity index)	Inlet Water Temperature (°F)	Water Flow Rate (gpm)	Indoor Unit Entering Air Wet Bulb Temperature °F											
			61		65		68		70		72		75	
			TC MBh	PI kW	TC MBh	PI kW	TC MBh	PI kW	TC MBh	PI kW	TC MBh	PI kW	TC MBh	PI kW
70	23	52.8	139.3	14.40	130.9	13.71	123.5	13.28	122.4	12.49	121.6	12.06	119.4	10.97
		101.6	157.7	15.63	148.1	14.87	139.7	14.41	138.5	13.55	137.6	13.09	135.1	11.90
		126.8	174.2	16.86	163.6	16.04	154.4	15.54	153.0	14.62	152.0	14.12	149.2	12.83
	32	52.8	242.2	20.71	224.0	19.71	208.0	19.10	204.3	17.96	201.2	17.35	193.9	15.77
		101.6	247.8	20.95	229.3	19.94	212.9	19.32	209.1	18.17	206.0	17.55	198.5	15.95
		126.8	251.6	20.95	232.8	19.94	216.1	19.32	212.3	18.17	209.1	17.55	201.5	15.95
	41	52.8	333.4	22.59	315.9	21.50	300.5	20.83	294.1	19.59	280.9	18.92	267.7	17.20
		101.6	336.3	23.05	318.3	21.94	300.7	21.26	294.1	19.99	280.9	19.31	267.7	17.55
		126.8	336.3	23.22	317.8	22.10	300.7	21.41	294.1	20.13	280.9	19.44	267.7	17.68
	50	52.8	334.8	20.65	316.9	19.52	300.6	18.80	294.1	17.79	280.9	17.06	267.7	15.62
		101.6	336.3	20.50	318.1	19.35	300.7	18.62	294.1	17.79	280.9	17.06	267.7	15.60
		126.8	336.3	20.58	317.8	19.43	300.7	18.70	294.1	17.87	280.9	16.94	267.7	15.66
	59	52.8	336.3	18.72	317.8	17.55	300.7	16.77	294.1	15.99	280.9	15.21	267.7	14.04
		101.6	336.3	17.94	317.8	16.77	300.7	15.99	294.1	15.60	280.9	14.82	267.7	13.65
		126.8	336.3	17.94	317.8	16.77	300.7	15.99	294.1	15.60	280.9	14.43	267.7	13.65
	68	52.8	336.3	15.60	317.8	14.82	300.7	14.43	294.1	14.04	280.9	13.26	267.7	12.48
		101.6	336.3	15.21	317.8	14.43	300.7	14.04	294.1	13.65	280.9	12.87	267.7	12.09
		126.8	336.3	15.21	317.8	14.43	300.7	14.04	294.1	13.26	280.9	12.87	267.7	11.70
	77	52.8	336.3	14.04	317.8	13.26	300.7	12.48	294.1	12.09	280.9	11.31	267.7	10.53
		101.6	336.3	13.65	317.8	12.87	300.7	12.09	294.1	11.70	280.9	11.31	267.7	10.53
		126.8	336.3	13.26	317.8	12.48	300.7	12.09	294.1	11.70	280.9	10.92	267.7	10.53
	86	52.8	336.3	12.48	317.8	11.70	300.7	10.92	294.1	10.53	280.9	10.14	267.7	9.36
		101.6	336.3	12.09	317.8	11.31	300.7	10.53	294.1	10.53	280.9	9.75	267.7	9.36
		126.8	336.3	12.09	317.8	11.31	300.7	10.53	294.1	10.14	280.9	9.75	267.7	9.36
	95	52.8	336.3	11.31	317.8	10.53	300.7	9.75	294.1	9.75	280.9	8.97	267.7	8.58
		101.6	336.3	10.92	317.8	10.14	300.7	9.75	294.1	9.36	280.9	8.97	267.7	8.19
		126.8	336.3	10.92	317.8	10.14	300.7	9.36	294.1	9.36	280.9	8.97	267.7	8.19
	104	52.8	336.3	10.53	317.8	9.75	300.7	8.97	294.1	8.58	280.9	8.19	267.7	7.80
		101.6	336.3	10.14	317.8	9.36	300.7	8.58	294.1	8.58	280.9	8.19	267.7	7.41
		126.8	336.3	10.14	317.8	9.36	300.7	8.58	294.1	8.19	280.9	7.80	267.7	7.41
	113	52.8	336.3	9.75	317.8	8.97	300.7	8.19	294.1	7.41	280.9	7.41	267.7	7.02
		101.6	336.3	9.36	317.8	8.58	300.7	7.41	294.1	7.80	280.9	7.41	267.7	6.63
		126.8	336.3	9.36	317.8	8.58	300.7	7.80	294.1	7.02	280.9	6.63	267.7	6.63
60	23	52.8	119.7	11.70	111.9	11.27	106.2	10.81	104.8	10.05	104.5	9.90	102.3	8.83
		101.6	135.4	12.70	126.6	12.23	120.1	11.73	118.6	10.91	118.2	10.74	115.8	9.59
		126.8	149.6	13.70	139.9	13.19	132.7	12.65	131.0	11.76	130.6	11.58	127.9	10.34
	32	52.8	208.0	16.83	191.5	16.21	178.8	15.55	175.0	14.45	172.9	14.23	166.2	12.70
		101.6	212.8	17.02	196.0	16.39	183.0	15.73	179.1	14.62	176.9	14.40	170.1	12.85
		126.8	216.1	17.02	199.0	16.39	185.8	15.73	181.9	14.62	179.7	14.40	172.7	12.85
	41	52.8	286.4	18.35	270.0	17.68	258.3	16.96	251.9	15.77	241.3	15.52	229.5	13.85
		101.6	288.8	18.73	272.1	18.04	258.5	17.30	251.9	16.09	241.3	15.84	229.5	14.14
		126.8	288.8	18.86	271.7	18.17	258.5	17.43	251.9	16.20	241.3	15.95	229.5	14.24
	50	52.8	287.6	16.78	270.8	16.05	258.4	15.30	251.9	14.32	241.3	14.00	229.5	12.58
		101.6	288.8	16.77	271.9	16.04	258.5	15.28	251.9	14.48	241.3	13.97	229.5	12.72
		126.8	288.8	16.84	271.7	15.91	258.5	15.15	251.9	14.34	241.3	13.83	229.5	12.58
	59	52.8	288.8	15.21	271.7	14.43	258.5	13.65	251.9	12.87	241.3	12.48	229.5	11.31
		101.6	288.8	14.82	271.7	14.04	258.5	13.26	251.9	12.87	241.3	12.09	229.5	11.31
		126.8	288.8	14.82	271.7	13.65	258.5	12.87	251.9	12.48	241.3	11.70	229.5	10.92
	68	52.8	288.8	13.26	271.7	12.48	258.5	11.70	251.9	11.31	241.3	10.92	229.5	10.14
		101.6	288.8	12.87	271.7	12.09	258.5	11.31	251.9	10.92	241.3	10.53	229.5	9.75
		126.8	288.8	12.87	271.7	12.09	258.5	11.31	251.9	10.92	241.3	10.53	229.5	9.75
	77	52.8	288.8	11.70	271.7	10.92	258.5	10.14	251.9	10.14	241.3	9.36	229.5	8.97
		101.6	288.8	11.31	271.7	10.53	258.5	10.14	251.9	9.75	241.3	9.36	229.5	8.58
		126.8	288.8	11.31	271.7	10.53	258.5	9.75	251.9	9.75	241.3	9.36	229.5	8.58
	86	52.8	288.8	10.53	271.7	9.75	258.5	9.36	251.9	8.97	241.3	8.58	229.5	8.19
		101.6	288.8	10.14	271.7	9.36	258.5	8.97	251.9	8.58	241.3	8.19	229.5	7.80
		126.8	288.8	10.14	271.7	9.36	258.5	8.97	251.9	8.58	241.3	8.19	229.5	7.80
	95	52.8	288.8	9.36	271.7	8.97	258.5	8.19	251.9	8.19	241.3	7.80	229.5	7.41
		101.6	288.8	9.36	271.7	8.58	258.5	8.19	251.9	7.80	241.3	7.41	229.5	7.02
		126.8	288.8	9.36	271.7	8.58	258.5	7.80	251.9	7.80	241.3	7.41	229.5	7.02
	104	52.8	288.8	8.58	271.7	8.19	258.5	7.41	251.9	7.41	241.3	7.02	229.5	6.63
		101.6	288.8	8.58	271.7	7.80	258.5	7.41	251.9	7.02	241.3	6.63	229.5	6.63
		126.8	288.8	8.58	271.7	7.80	258.5	7.41	251.9	7.02	241.3	6.63	229.5	6.63
	113	52.8	288.8	7.80	271.7	7.41	258.5	6.63	251.9	6.63	241.3	6.24	229.5	5.85
		101.6	288.8	7.80	271.7	7.02	258.5	6.63	251.9	6.24	241.3	5.85	229.5	6.24
		126.8	288.8	7.80	271.7	7.02	258.5	7.02	251.9	6.24	241.3	5.85	229.5	6.24

TC = Total Heating Capacity (MBh).
PI = Power input (KW).

Power input (KW) includes compressor(s) and controls.
Test condition based on 25 feet of equivalent refrigerant piping and no change in elevation between indoor unit and water source unit.

Due to our policy of continuous product innovation, some specifications may change without notification.
©LG Electronics U.S.A., Inc., Englewood Cliffs, NJ. All rights reserved. "LG" is a registered trademark of LG Corp.

PERFORMANCE DATA

Heating Capacity—ARWB390DA2 / ARWN390DA2 (460 Volt)

Table 28e: Heating Capacity ARWB390DA2 / ARWN390DA2

Combination Ratio (%) (Capacity index)	Inlet Water Temperature (°F)	Water Flow Rate (gpm)	Indoor Unit Entering Air Wet Bulb Temperature °F											
			61		65		68		70		72		75	
			TC	PI	TC	PI	TC	PI	TC	PI	TC	PI	TC	PI
			MBh	kW	MBh	kW	MBh	kW	MBh	kW	MBh	kW	MBh	kW
50	23	52.8	99.4	9.30	93.4	8.83	88.3	8.34	87.3	7.92	86.8	7.42	85.3	7.01
		101.6	112.5	10.09	105.7	9.59	99.9	9.05	98.7	8.59	98.2	8.05	96.5	7.60
		126.8	124.3	10.89	116.8	10.34	110.4	9.76	109.1	9.27	108.5	8.69	106.6	8.20
	32	52.8	172.8	13.38	159.9	12.70	148.7	11.99	145.7	11.39	143.6	10.67	138.5	10.07
		101.6	176.9	13.53	163.6	12.85	152.2	12.13	149.1	11.52	147.0	10.80	141.8	10.19
		126.8	179.6	13.53	166.1	12.85	154.5	12.13	151.4	11.52	149.2	10.80	143.9	10.19
	41	52.8	238.0	14.59	225.5	13.85	214.8	13.08	209.7	12.42	200.4	11.64	191.2	10.99
		101.6	240.0	14.89	227.2	14.14	215.0	13.35	209.7	12.68	200.4	11.88	191.2	11.21
		126.8	240.0	14.99	226.8	14.24	215.0	13.44	209.7	12.77	200.4	11.97	191.2	11.29
	50	52.8	239.0	13.34	226.1	12.58	214.9	11.81	209.7	11.28	200.4	10.50	191.2	9.98
		101.6	240.0	13.29	227.0	12.53	215.0	11.74	209.7	11.21	200.4	10.62	191.2	9.90
		126.8	240.0	13.35	226.8	12.58	215.0	11.79	209.7	11.26	200.4	10.47	191.2	9.94
	59	52.8	240.0	12.09	226.8	11.31	215.0	10.53	209.7	10.14	200.4	9.36	191.2	8.97
		101.6	240.0	11.70	226.8	10.92	215.0	10.14	209.7	9.75	200.4	9.36	191.2	8.58
		126.8	240.0	11.70	226.8	10.92	215.0	10.14	209.7	9.75	200.4	8.97	191.2	8.58
	68	52.8	240.0	10.53	226.8	9.75	215.0	9.36	209.7	8.97	200.4	8.58	191.2	7.80
		101.6	240.0	10.14	226.8	9.36	215.0	8.97	209.7	8.58	200.4	8.19	191.2	7.80
		126.8	240.0	10.14	226.8	9.36	215.0	8.97	209.7	8.58	200.4	8.19	191.2	7.80
	77	52.8	240.0	9.36	226.8	8.58	215.0	8.19	209.7	7.80	200.4	7.41	191.2	7.02
		101.6	240.0	8.97	226.8	8.58	215.0	7.80	209.7	7.80	200.4	7.41	191.2	7.02
		126.8	240.0	8.97	226.8	8.58	215.0	7.80	209.7	7.80	200.4	7.41	191.2	7.02
	86	52.8	240.0	8.58	226.8	7.80	215.0	7.41	209.7	7.02	200.4	7.02	191.2	6.63
		101.6	240.0	8.19	226.8	7.41	215.0	7.02	209.7	7.02	200.4	6.63	191.2	6.24
		126.8	240.0	8.19	226.8	7.41	215.0	7.02	209.7	7.02	200.4	6.63	191.2	6.24
	95	52.8	240.0	7.80	226.8	7.02	215.0	6.63	209.7	6.63	200.4	6.24	191.2	5.85
		101.6	240.0	7.41	226.8	7.02	215.0	6.63	209.7	6.24	200.4	6.24	191.2	5.85
		126.8	240.0	7.41	226.8	7.02	215.0	6.63	209.7	6.24	200.4	6.24	191.2	5.85
	104	52.8	240.0	7.02	226.8	6.63	215.0	6.24	209.7	5.85	200.4	5.85	191.2	5.46
		101.6	240.0	6.63	226.8	6.24	215.0	5.85	209.7	5.85	200.4	5.46	191.2	5.46
		126.8	240.0	6.63	226.8	6.24	215.0	5.85	209.7	5.85	200.4	5.46	191.2	5.46
	113	52.8	240.0	6.24	226.8	6.24	215.0	5.85	209.7	5.07	200.4	5.46	191.2	5.07
		101.6	240.0	5.85	226.8	5.46	215.0	5.07	209.7	5.46	200.4	4.68	191.2	5.07
		126.8	240.0	5.85	226.8	5.46	215.0	5.07	209.7	5.46	200.4	4.68	191.2	5.07

TC = Total Heating Capacity (MBh).
PI = Power input (KW).
Power input (KW) includes compressor(s) and controls.
Test condition based on 25 feet of equivalent refrigerant piping and no change in elevation between indoor unit and water source unit.

Due to our policy of continuous product innovation, some specifications may change without notification.
©LG Electronics U.S.A., Inc., Englewood Cliffs, NJ. All rights reserved. "LG" is a registered trademark of LG Corp.

PERFORMANCE DATA

Heating Capacity—ARWB480DA2 / ARWN480DA2 (460 Volt)

Table 29a: Heating Capacity ARWB480DA2 / ARWN480DA2

Combination Ratio (%) (Capacity index)	Inlet Water Temperature (°F)	Water Flow Rate (gpm)	Indoor Unit Entering Air Wet Bulb Temperature °F											
			61		65		68		70		72		75	
			TC MBh	PI kW	TC MBh	PI kW	TC MBh	PI kW	TC MBh	PI kW	TC MBh	PI kW	TC MBh	PI kW
130	23	66.0	263.0	31.14	260.8	29.35	259.4	27.37	255.9	26.61	259.1	25.86	252.2	23.19
		127.0	297.6	33.24	295.1	31.55	293.5	29.70	289.6	28.87	293.2	28.06	285.4	25.16
		158.5	328.8	35.35	326.0	33.75	324.2	32.03	319.9	31.14	323.9	30.26	315.3	27.14
	32	66.0	457.1	41.96	446.3	40.67	436.8	39.36	427.3	38.26	428.8	37.19	409.7	33.34
		127.0	467.8	42.37	456.7	41.10	447.1	39.81	437.3	38.70	438.8	37.61	419.3	33.73
		158.5	475.0	42.37	463.7	41.10	453.9	39.81	444.0	38.70	445.5	37.61	425.7	33.73
	41	66.0	656.3	45.18	645.4	44.04	631.2	42.92	615.0	41.73	598.5	40.56	565.5	36.37
		127.0	665.5	45.97	650.2	44.87	631.5	43.80	615.0	42.58	598.5	41.39	565.5	37.11
		158.5	669.4	46.26	652.2	45.17	631.5	44.12	615.0	42.89	598.5	41.68	565.5	37.38
	50	66.0	659.0	40.84	647.3	39.59	631.3	38.88	615.0	37.90	598.5	36.58	565.5	33.03
		127.0	674.3	40.51	659.6	39.71	641.4	39.18	624.9	37.84	607.6	36.51	574.6	32.91
		158.5	677.9	41.09	663.9	40.25	645.5	39.33	628.2	37.99	611.7	37.10	577.9	34.50
	59	66.0	661.7	36.50	649.3	35.14	631.5	34.85	615.0	34.07	598.5	32.61	565.5	29.69
		127.0	683.1	35.04	669.0	34.55	651.3	34.55	634.8	33.09	616.6	31.63	583.7	28.71
		158.5	686.4	35.92	675.6	35.33	659.5	34.55	641.4	33.09	624.9	32.51	590.3	31.63
	68	66.0	686.4	33.58	674.0	32.22	656.2	31.54	638.1	30.66	619.9	30.08	583.7	28.71
		127.0	707.8	32.61	695.4	32.12	676.0	31.44	657.9	31.15	641.4	30.85	605.1	27.74
		158.5	711.1	32.61	700.4	32.12	684.2	31.63	664.5	31.15	646.3	30.85	610.0	29.49
	77	66.0	718.9	32.12	700.7	31.24	684.2	30.66	671.1	30.17	656.2	29.69	618.3	27.74
		127.0	718.9	31.63	700.7	31.05	684.2	30.17	671.1	29.69	656.2	29.20	618.3	27.25
		158.5	718.9	31.15	700.7	30.27	684.2	29.69	671.1	29.20	656.2	28.71	618.3	26.77
	86	66.0	718.9	31.15	700.7	29.78	684.2	29.39	671.1	28.71	656.2	28.23	618.3	26.28
		127.0	718.9	30.17	700.7	29.59	684.2	28.71	671.1	28.23	656.2	27.25	618.3	25.31
		158.5	718.9	29.69	700.7	28.81	684.2	28.23	671.1	27.74	656.2	27.25	618.3	25.31
	95	66.0	718.9	29.69	700.7	28.81	684.2	28.23	671.1	27.25	656.2	26.28	618.3	24.33
		127.0	718.9	28.71	700.7	28.13	684.2	27.74	671.1	26.77	656.2	25.79	618.3	23.36
		158.5	718.9	28.71	700.7	27.84	684.2	27.25	671.1	26.28	656.2	25.31	618.3	23.36
	104	66.0	718.9	28.71	700.7	27.84	684.2	27.25	671.1	26.28	656.2	25.31	618.3	22.87
		127.0	718.9	27.74	700.7	27.16	684.2	26.28	671.1	25.31	656.2	24.33	618.3	21.90
		158.5	718.9	27.25	700.7	26.67	684.2	26.28	671.1	25.31	656.2	24.33	618.3	21.90
	113	66.0	718.9	27.74	700.7	26.86	684.2	26.28	671.1	25.31	656.2	24.33	618.3	21.41
		127.0	718.9	26.77	700.7	26.18	684.2	24.82	671.1	23.85	656.2	22.87	618.3	20.44
		158.5	718.9	25.79	700.7	25.50	684.2	25.31	671.1	24.33	656.2	23.36	618.3	20.44
120	23	66.0	250.0	31.14	247.9	29.35	246.5	27.37	243.6	26.23	245.6	25.47	239.0	22.81
		127.0	282.9	33.24	280.5	31.55	278.9	29.70	275.6	28.46	277.9	27.64	270.4	24.75
		158.5	312.6	35.35	309.9	33.75	308.1	32.03	304.5	30.69	307.0	29.81	298.7	26.69
	32	66.0	434.6	41.96	424.2	40.67	415.2	39.36	406.7	37.72	406.4	36.63	388.2	32.80
		127.0	444.7	42.37	434.1	41.10	424.9	39.81	416.2	38.15	415.9	37.05	397.3	33.17
		158.5	451.5	42.37	440.8	41.10	431.4	39.81	422.6	38.15	422.2	37.05	403.3	33.17
	41	66.0	625.2	45.18	614.3	44.04	599.8	42.92	585.3	41.14	567.2	39.95	535.8	35.77
		127.0	634.0	45.97	618.8	44.87	600.2	43.80	585.3	41.98	567.2	40.77	535.8	36.50
		158.5	637.7	46.26	615.3	45.17	600.2	44.12	585.3	42.28	567.2	41.06	535.8	36.76
	50	66.0	627.8	40.55	616.1	39.44	600.0	38.59	585.3	37.36	567.2	36.04	535.8	32.49
		127.0	639.6	41.09	625.8	40.00	606.7	39.18	591.9	37.53	572.9	35.96	541.6	32.61
		158.5	643.1	40.94	623.8	40.01	609.2	39.33	594.4	37.69	575.4	36.10	544.1	33.71
	59	66.0	630.3	35.92	617.9	34.85	600.2	34.26	585.3	33.58	567.2	32.12	535.8	29.20
		127.0	645.2	36.21	632.8	35.14	613.3	34.55	598.5	33.09	578.7	31.15	547.4	28.71
		158.5	648.5	35.62	632.3	34.85	618.3	34.55	603.5	33.09	583.7	31.15	552.3	30.66
	68	66.0	648.5	32.22	636.1	30.95	616.6	30.17	600.2	29.69	580.4	29.20	549.0	27.64
		127.0	665.0	32.22	650.9	31.44	629.8	30.66	615.0	30.17	595.2	29.10	562.2	27.25
		158.5	668.2	31.93	650.5	31.15	634.8	30.66	618.3	30.17	598.5	29.20	565.5	28.23
	77	66.0	676.0	30.37	656.2	29.01	634.8	28.42	621.6	27.74	605.1	27.25	572.1	25.31
		127.0	677.6	29.88	656.2	28.81	634.8	28.23	621.6	27.25	605.1	26.77	572.1	24.82
		158.5	679.3	28.81	656.2	28.03	634.8	27.74	621.6	27.25	605.1	26.28	572.1	24.82
	86	66.0	679.3	28.91	656.2	27.55	634.8	26.77	621.6	25.79	605.1	25.31	572.1	23.36
		127.0	679.3	27.93	656.2	26.86	634.8	26.28	621.6	25.31	605.1	24.33	572.1	22.87
		158.5	679.3	27.06	656.2	26.28	634.8	25.79	621.6	25.31	605.1	24.33	572.1	22.39
	95	66.0	679.3	27.45	656.2	26.09	634.8	25.31	621.6	24.33	605.1	23.36	572.1	21.41
		127.0	679.3	25.89	656.2	25.11	634.8	24.33	621.6	23.36	605.1	22.39	572.1	20.93
		158.5	679.3	25.60	656.2	24.92	634.8	24.33	621.6	23.36	605.1	22.39	572.1	20.44
	104	66.0	679.3	26.47	656.2	24.82	634.8	23.85	621.6	22.87	605.1	21.90	572.1	19.95
		127.0	679.3	24.43	656.2	23.65	634.8	22.87	621.6	21.90	605.1	20.93	572.1	19.47
		158.5	679.3	24.14	656.2	23.36	634.8	22.87	621.6	21.90	605.1	20.93	572.1	18.98
	113	66.0	679.3	25.50	656.2	23.55	634.8	22.39	621.6	21.41	605.1	20.44	572.1	18.49
		127.0	679.3	22.97	656.2	22.19	634.8	21.41	621.6	20.44	605.1	19.47	572.1	18.01
		158.5	679.3	22.68	656.2	21.80	634.8	21.41	621.6	20.44	605.1	19.47	572.1	17.52

TC = Total Heating Capacity (MBh).
PI = Power input (KW).

Power input (KW) includes compressor(s) and controls.
Test condition based on 25 feet of equivalent refrigerant piping and no change in elevation between indoor unit and water source unit.

Due to our policy of continuous product innovation, some specifications may change without notification.
©LG Electronics U.S.A., Inc., Englewood Cliffs, NJ. All rights reserved. "LG" is a registered trademark of LG Corp.

Table 29b: Heating Capacity ARWB480DA2 / ARWN480DA2

Combination Ratio (%) (Capacity index)	Inlet Water Temperature (°F)	Water Flow Rate (gpm)	Indoor Unit Entering Air Wet Bulb Temperature °F											
			61		65		68		70		72		75	
			TC MBh	PI kW	TC MBh	PI kW	TC MBh	PI kW	TC MBh	PI kW	TC MBh	PI kW	TC MBh	PI kW
110	23	66.0	236.4	31.51	235.0	29.35	233.6	27.37	231.2	26.23	231.3	25.47	226.5	22.81
		127.0	267.5	33.65	265.9	31.55	264.4	29.70	261.7	28.46	261.7	27.64	256.3	24.75
		158.5	295.5	35.78	293.7	33.75	292.1	32.03	289.1	30.69	289.1	29.81	283.1	26.69
	32	66.0	410.8	42.50	402.1	40.67	393.5	39.36	386.1	37.72	382.7	36.63	367.9	32.80
		127.0	420.4	42.92	411.5	41.10	402.7	39.81	395.1	38.15	391.7	37.05	376.5	33.17
		158.5	426.9	42.92	417.8	41.10	408.9	39.81	401.2	38.15	397.7	37.05	382.2	33.17
	41	66.0	597.9	45.77	583.2	44.04	568.5	42.92	555.6	41.14	534.2	39.95	507.8	35.77
		127.0	606.2	46.57	587.5	44.87	568.8	43.80	555.6	41.98	534.2	40.77	507.8	36.50
		158.5	609.7	46.86	589.2	45.17	568.8	44.12	555.6	42.28	534.2	41.06	507.8	36.76
	50	66.0	600.3	40.94	584.9	39.59	568.7	38.74	555.6	37.36	534.2	36.04	507.8	32.49
		127.0	609.4	41.25	591.2	40.00	572.1	39.18	558.9	37.53	537.5	35.96	510.3	32.61
		158.5	612.8	41.24	593.7	40.01	573.8	39.09	559.8	37.44	538.3	36.10	511.9	32.98
	59	66.0	602.7	36.11	586.6	35.14	568.8	34.55	555.6	33.58	534.2	32.12	507.8	29.20
		127.0	612.6	35.92	594.8	35.14	575.4	34.55	562.2	33.09	540.8	31.15	512.8	28.71
		158.5	615.9	35.62	598.1	34.85	578.7	34.07	563.9	32.61	542.4	31.15	516.1	29.20
	68	66.0	614.3	31.24	596.5	30.47	577.1	29.69	562.2	29.20	540.8	28.23	512.8	26.47
		127.0	627.5	31.54	604.7	30.47	583.7	29.69	570.5	29.20	547.4	27.74	521.0	26.28
		158.5	630.8	31.54	609.7	30.47	587.0	29.69	572.1	28.71	550.7	27.74	522.7	26.28
	77	66.0	631.5	28.32	611.7	27.25	587.0	26.77	573.8	25.79	554.0	24.82	524.3	22.87
		127.0	636.4	28.13	611.7	26.77	587.0	26.28	573.8	25.31	554.0	24.33	524.3	22.87
		158.5	639.7	28.13	611.7	26.86	587.0	25.79	573.8	25.31	554.0	23.85	524.3	22.39
	86	66.0	639.7	25.79	611.7	24.82	587.0	23.85	573.8	23.36	554.0	21.90	524.3	20.44
		127.0	639.7	25.31	611.7	24.33	587.0	23.36	573.8	22.87	554.0	21.41	524.3	19.95
		158.5	639.7	25.11	611.7	23.85	587.0	22.87	573.8	22.39	554.0	21.41	524.3	19.95
	95	66.0	639.7	24.33	611.7	22.87	587.0	21.90	573.8	20.93	554.0	19.95	524.3	18.49
		127.0	639.7	23.36	611.7	22.39	587.0	21.41	573.8	20.44	554.0	19.47	524.3	18.01
		158.5	639.7	22.78	611.7	21.90	587.0	20.93	573.8	20.44	554.0	19.47	524.3	18.01
	104	66.0	639.7	22.87	611.7	21.90	587.0	20.44	573.8	19.47	554.0	18.49	524.3	17.03
		127.0	639.7	21.90	611.7	20.93	587.0	19.47	573.8	18.98	554.0	18.01	524.3	16.55
		158.5	639.7	21.61	611.7	20.44	587.0	19.47	573.8	18.49	554.0	17.52	524.3	16.06
	113	66.0	639.7	21.41	611.7	20.93	587.0	18.98	573.8	18.01	554.0	17.03	524.3	15.57
		127.0	639.7	20.44	611.7	19.47	587.0	17.52	573.8	17.52	554.0	16.55	524.3	15.09
		158.5	639.7	20.44	611.7	18.98	587.0	18.01	573.8	16.55	554.0	15.57	524.3	14.11
100	23	66.0	223.4	31.51	222.1	29.73	220.8	27.37	218.9	26.23	217.0	25.09	213.2	22.81
		127.0	252.8	33.65	251.3	31.96	249.8	29.70	247.7	28.46	245.6	27.22	241.3	24.75
		158.5	279.3	35.78	277.6	34.20	276.0	32.03	273.6	30.69	271.3	29.36	266.5	26.69
	32	66.0	388.3	42.50	380.0	41.22	371.8	39.36	365.5	37.72	359.1	36.08	346.4	32.80
		127.0	397.4	42.92	389.0	41.65	380.5	39.81	374.0	38.15	367.5	36.49	354.5	33.17
		158.5	403.4	42.92	394.9	41.65	386.4	39.81	379.7	38.15	373.1	36.49	359.9	33.17
	41	66.0	572.2	45.77	552.0	44.64	537.2	42.92	526.0	41.14	501.2	39.35	478.1	35.77
		127.0	580.1	46.57	556.1	45.48	537.5	43.80	526.0	41.98	501.2	40.15	478.1	36.50
		158.5	583.4	46.86	557.7	45.78	537.5	44.12	526.0	42.28	501.2	40.44	478.1	36.76
	50	66.0	574.5	40.94	553.7	39.99	537.4	38.74	526.0	37.36	501.2	35.49	478.1	32.49
		127.0	580.1	41.68	556.5	40.45	537.5	39.18	526.0	37.53	501.2	35.65	478.1	32.61
		158.5	584.2	41.54	559.0	40.46	537.5	39.09	526.0	37.44	501.2	35.55	478.1	32.50
	59	66.0	576.8	36.11	555.3	35.33	537.5	34.55	526.0	33.58	501.2	31.63	478.1	29.20
		127.0	580.1	36.79	556.9	35.43	537.5	34.55	526.0	33.09	501.2	31.15	478.1	28.71
		158.5	585.0	36.21	560.2	35.14	537.5	34.07	526.0	32.61	501.2	30.66	478.1	28.23
	68	66.0	581.7	30.85	558.6	29.98	537.5	29.20	526.0	28.71	501.2	26.77	478.1	25.31
		127.0	590.0	31.44	560.2	30.08	537.5	29.20	526.0	28.23	501.2	26.28	478.1	24.33
		158.5	593.3	30.85	565.2	29.78	537.5	28.71	526.0	27.74	501.2	25.79	478.1	23.85
	77	66.0	588.6	26.86	567.2	25.89	537.5	24.82	526.0	23.85	501.2	22.39	478.1	20.44
		127.0	596.9	26.96	567.2	25.31	537.5	24.33	526.0	23.36	501.2	21.90	478.1	20.44
		158.5	600.2	26.38	567.2	25.11	537.5	23.85	526.0	22.87	501.2	21.90	478.1	19.95
	86	66.0	600.2	24.33	567.2	22.39	537.5	20.93	526.0	20.44	501.2	18.98	478.1	18.01
		127.0	600.2	23.85	567.2	21.90	537.5	20.73	526.0	19.95	501.2	18.98	478.1	17.52
		158.5	600.2	23.36	567.2	21.90	537.5	20.44	526.0	19.95	501.2	18.49	478.1	17.52
	95	66.0	600.2	22.39	567.2	20.44	537.5	18.49	526.0	18.01	501.2	17.03	478.1	15.57
		127.0	600.2	21.41	567.2	19.47	537.5	18.30	526.0	17.52	501.2	16.55	478.1	15.09
		158.5	600.2	21.41	567.2	19.47	537.5	18.01	526.0	17.52	501.2	16.55	478.1	15.09
	104	66.0	600.2	20.93	567.2	18.98	537.5	16.55	526.0	16.06	501.2	15.09	478.1	14.11
		127.0	600.2	19.95	567.2	18.01	537.5	16.35	526.0	15.57	501.2	14.60	478.1	13.63
		158.5	600.2	19.47	567.2	18.01	537.5	16.06	526.0	15.57	501.2	14.60	478.1	13.63
	113	66.0	600.2	19.47	567.2	17.52	537.5	14.60	526.0	14.11	501.2	13.14	478.1	12.65
		127.0	600.2	18.49	567.2	16.55	537.5	14.41	526.0	13.63	501.2	12.65	478.1	12.17
		158.5	600.2	17.52	567.2	16.55	537.5	14.11	526.0	13.63	501.2	12.65	478.1	12.17

TC = Total Heating Capacity (MBh).
PI = Power input (KW).

Power input (KW) includes compressor(s) and controls.
Test condition based on 25 feet of equivalent refrigerant piping and no change in elevation between indoor unit and water source unit.

Due to our policy of continuous product innovation, some specifications may change without notification.
©LG Electronics U.S.A., Inc., Englewood Cliffs, NJ. All rights reserved. "LG" is a registered trademark of LG Corp.

PERFORMANCE DATA

Heating Capacity—ARWB480DA2 / ARWN480DA2 (460 Volt)

Table 29c: Heating Capacity ARWB480DA2 / ARWN480DA2

Combination Ratio (%) (Capacity index)	Inlet Water Temperature (°F)	Water Flow Rate (gpm)	Indoor Unit Entering Air Wet Bulb Temperature °F											
			61		65		68		70		72		75	
			TC MBh	PI kW	TC MBh	PI kW	TC MBh	PI kW	TC MBh	PI kW	TC MBh	PI kW	TC MBh	PI kW
90	23	66.0	211.1	29.26	204.4	26.69	198.4	23.51	196.9	22.43	195.6	21.61	191.9	19.39
		127.0	238.9	31.21	231.3	28.66	224.5	25.51	222.8	24.34	221.3	23.45	217.2	21.04
		158.5	263.9	33.15	255.5	30.64	248.0	27.52	246.2	26.25	244.5	25.29	239.9	22.69
	32	66.0	366.9	39.27	349.8	36.85	334.2	33.81	328.8	32.25	323.7	31.08	311.7	27.88
		127.0	375.5	39.65	358.0	37.23	342.0	34.20	336.5	32.62	331.2	31.44	319.0	28.20
		158.5	381.2	39.65	363.5	37.23	347.3	34.20	341.7	32.62	336.3	31.44	323.9	28.20
	41	66.0	515.9	42.25	498.7	39.87	482.8	36.88	473.2	35.17	451.8	33.90	430.3	30.40
		127.0	518.0	42.98	497.0	40.61	483.1	37.63	473.2	35.89	451.8	34.59	430.3	31.03
		158.5	521.1	43.24	498.6	40.88	483.1	37.90	473.2	36.15	451.8	34.84	430.3	31.25
	50	66.0	518.1	37.14	500.2	35.36	483.0	33.28	473.2	31.94	451.8	30.58	430.3	27.61
		127.0	517.2	37.26	497.5	35.49	483.1	33.42	473.2	32.06	451.8	30.44	430.3	27.68
		158.5	520.4	37.15	499.1	35.38	483.1	33.31	473.2	31.95	451.8	30.56	430.3	27.79
	59	66.0	520.2	32.02	501.7	30.85	483.1	29.69	473.2	28.71	451.8	27.25	430.3	24.82
		127.0	516.5	31.54	497.9	30.37	483.1	29.20	473.2	28.23	451.8	26.28	430.3	24.33
		158.5	519.8	31.05	499.6	29.88	483.1	28.71	473.2	27.74	451.8	26.28	430.3	24.33
	68	66.0	523.5	27.16	503.3	26.28	483.1	25.31	473.2	24.33	451.8	23.36	430.3	21.90
		127.0	521.4	27.16	499.6	25.99	483.1	24.82	473.2	23.85	451.8	22.39	430.3	20.93
		158.5	523.1	26.67	501.2	25.79	483.1	24.82	473.2	23.85	451.8	22.39	430.3	20.93
	77	66.0	534.2	23.65	511.1	22.39	483.1	21.41	473.2	20.44	451.8	19.47	430.3	18.01
		127.0	539.2	23.46	511.1	22.19	483.1	20.93	473.2	20.44	451.8	18.98	430.3	17.52
		158.5	540.8	22.87	511.1	21.71	483.1	20.93	473.2	19.95	451.8	18.98	430.3	17.52
	86	66.0	540.8	21.41	511.1	19.95	483.1	18.49	473.2	18.01	451.8	17.03	430.3	15.57
		127.0	540.8	20.93	511.1	19.47	483.1	18.01	473.2	17.52	451.8	16.55	430.3	15.57
		158.5	540.8	20.44	511.1	18.98	483.1	18.01	473.2	17.52	451.8	16.55	430.3	15.09
	95	66.0	540.8	19.47	511.1	18.01	483.1	16.55	473.2	16.06	451.8	15.09	430.3	14.11
		127.0	540.8	18.98	511.1	17.52	483.1	16.06	473.2	15.57	451.8	14.60	430.3	13.63
		158.5	540.8	18.49	511.1	17.03	483.1	15.57	473.2	15.09	451.8	14.60	430.3	13.63
	104	66.0	540.8	18.01	511.1	16.55	483.1	14.60	473.2	14.11	451.8	13.63	430.3	12.65
		127.0	540.8	17.03	511.1	16.06	483.1	14.11	473.2	13.63	451.8	13.14	430.3	12.17
		158.5	540.8	17.03	511.1	16.06	483.1	14.11	473.2	13.63	451.8	13.14	430.3	12.17
	113	66.0	540.8	16.55	511.1	15.09	483.1	12.65	473.2	12.17	451.8	12.17	430.3	11.19
		127.0	540.8	15.09	511.1	14.60	483.1	12.17	473.2	11.68	451.8	11.68	430.3	10.71
		158.5	540.8	15.57	511.1	15.09	483.1	12.65	473.2	12.17	451.8	11.68	430.3	10.71
80	23	66.0	199.5	20.97	186.8	20.15	176.8	19.27	175.0	18.62	174.2	17.75	170.6	16.34
		127.0	225.7	22.75	211.3	21.86	200.0	20.91	198.0	20.21	197.1	19.27	193.0	17.74
		158.5	249.4	24.54	233.5	23.58	221.0	22.56	218.7	21.80	217.7	20.78	213.2	19.13
	32	66.0	346.7	30.15	319.6	28.97	297.7	27.71	292.1	26.78	288.2	25.53	277.1	23.50
		127.0	354.8	30.50	327.1	29.30	304.7	28.03	299.0	27.09	295.0	25.83	283.6	23.77
		158.5	360.2	30.50	332.1	29.30	309.3	28.03	303.6	27.09	299.5	25.83	287.9	23.77
	41	66.0	477.4	32.89	450.7	31.60	430.1	30.23	420.4	29.21	402.3	27.85	382.5	25.64
		127.0	481.4	33.56	454.1	32.24	430.3	30.85	420.4	29.81	402.3	28.41	382.5	26.16
		158.5	481.4	33.80	453.4	32.47	430.3	31.07	420.4	30.02	402.3	28.62	382.5	26.35
	50	66.0	479.4	30.07	452.0	28.69	430.2	27.28	420.4	26.53	402.3	25.12	382.5	23.28
		127.0	481.4	29.92	453.8	28.53	430.3	27.35	420.4	26.58	402.3	25.16	382.5	23.30
		158.5	481.4	29.80	453.4	28.65	430.3	27.46	420.4	26.45	402.3	25.02	382.5	23.15
	59	66.0	481.4	27.25	453.4	25.79	430.3	24.33	420.4	23.85	402.3	22.39	382.5	20.93
		127.0	481.4	26.28	453.4	24.82	430.3	23.85	420.4	23.36	402.3	21.90	382.5	20.44
		158.5	481.4	25.79	453.4	24.82	430.3	23.85	420.4	22.87	402.3	21.41	382.5	19.95
	68	66.0	481.4	22.87	453.4	21.90	430.3	20.93	420.4	20.44	402.3	19.47	382.5	18.01
		127.0	481.4	22.39	453.4	21.41	430.3	20.93	420.4	19.95	402.3	18.98	382.5	17.52
		158.5	481.4	21.90	453.4	20.93	430.3	20.44	420.4	19.95	402.3	18.49	382.5	17.52
	77	66.0	481.4	20.44	453.4	18.98	430.3	18.01	420.4	17.52	402.3	16.55	382.5	15.57
		127.0	481.4	19.95	453.4	18.49	430.3	18.01	420.4	17.03	402.3	16.06	382.5	15.09
		158.5	481.4	19.47	453.4	18.49	430.3	17.52	420.4	17.03	402.3	16.06	382.5	15.09
	86	66.0	481.4	18.01	453.4	17.03	430.3	16.06	420.4	15.57	402.3	14.60	382.5	13.63
		127.0	481.4	17.52	453.4	16.55	430.3	15.57	420.4	15.09	402.3	14.11	382.5	13.14
		158.5	481.4	17.52	453.4	16.55	430.3	15.57	420.4	15.09	402.3	14.11	382.5	13.14
	95	66.0	481.4	16.55	453.4	15.57	430.3	14.11	420.4	13.63	402.3	13.14	382.5	12.17
		127.0	481.4	16.06	453.4	15.09	430.3	13.63	420.4	13.63	402.3	12.65	382.5	12.17
		158.5	481.4	16.06	453.4	14.60	430.3	13.63	420.4	13.14	402.3	12.65	382.5	11.68
	104	66.0	481.4	15.57	453.4	14.11	430.3	12.65	420.4	12.65	402.3	11.68	382.5	11.19
		127.0	481.4	14.60	453.4	13.63	430.3	12.65	420.4	12.17	402.3	11.68	382.5	10.71
		158.5	481.4	14.60	453.4	13.63	430.3	12.17	420.4	12.17	402.3	11.68	382.5	10.71
	113	66.0	481.4	14.60	453.4	12.65	430.3	11.19	420.4	11.68	402.3	10.22	382.5	10.22
		127.0	481.4	13.14	453.4	12.17	430.3	11.68	420.4	10.71	402.3	10.71	382.5	9.25
		158.5	481.4	13.14	453.4	12.65	430.3	10.71	420.4	11.19	402.3	10.71	382.5	9.73

TC = Total Heating Capacity (MBh).
PI = Power input (KW).

Power input (KW) includes compressor(s) and controls.
Test condition based on 25 feet of equivalent refrigerant piping and no change in elevation between indoor unit and water source unit.

Due to our policy of continuous product innovation, some specifications may change without notification.
©LG Electronics U.S.A., Inc., Englewood Cliffs, NJ. All rights reserved. "LG" is a registered trademark of LG Corp.

PERFORMANCE DATA

Heating Capacity—ARWB480DA2 / ARWN480DA2 (460 Volt)

Table 29d: Heating Capacity ARWB480DA2 / ARWN480DA2

Combination Ratio (%) (Capacity index)	Inlet Water Temperature (°F)	Water Flow Rate (gpm)	Indoor Unit Entering Air Wet Bulb Temperature °F											
			61		65		68		70		72		75	
			TC MBh	PI kW	TC MBh	PI kW	TC MBh	PI kW	TC MBh	PI kW	TC MBh	PI kW	TC MBh	PI kW
70	23	66.0	174.2	17.97	163.7	17.10	154.4	16.57	153.0	15.58	152.0	15.05	149.3	13.68
		127.0	197.1	19.50	185.2	18.56	174.7	17.99	173.2	16.91	172.0	16.33	168.9	14.85
		158.5	217.8	21.03	204.6	20.02	193.0	19.40	191.3	18.24	190.1	17.62	186.6	16.01
	32	66.0	302.8	25.85	280.1	24.60	260.1	23.83	255.5	22.41	251.6	21.65	242.5	19.68
		127.0	309.9	26.14	286.7	24.88	266.1	24.11	261.5	22.67	257.5	21.90	248.1	19.90
		158.5	314.6	26.14	291.0	24.88	270.2	24.11	265.5	22.67	261.4	21.90	251.9	19.90
	41	66.0	416.9	28.19	395.0	26.83	375.7	26.00	367.7	24.44	351.2	23.61	334.7	21.46
		127.0	420.4	28.76	398.0	27.38	375.9	26.53	367.7	24.94	351.2	24.09	334.7	21.90
		158.5	420.4	28.97	397.4	27.57	375.9	26.72	367.7	25.12	351.2	24.26	334.7	22.06
	50	66.0	418.7	25.77	396.2	24.36	375.8	23.46	367.7	22.20	351.2	21.29	334.7	19.49
		127.0	420.4	25.58	397.7	24.15	375.9	23.24	367.7	22.20	351.2	21.29	334.7	19.47
		158.5	420.4	25.68	397.4	24.25	375.9	23.34	367.7	22.29	351.2	21.14	334.7	19.55
	59	66.0	420.4	23.36	397.4	21.90	375.9	20.93	367.7	19.95	351.2	18.98	334.7	17.52
		127.0	420.4	22.39	397.4	20.93	375.9	19.95	367.7	19.47	351.2	18.49	334.7	17.03
		158.5	420.4	22.39	397.4	20.93	375.9	19.95	367.7	19.47	351.2	18.01	334.7	17.03
	68	66.0	420.4	19.47	397.4	18.49	375.9	18.01	367.7	17.52	351.2	16.55	334.7	15.57
		127.0	420.4	18.98	397.4	18.01	375.9	17.52	367.7	17.03	351.2	16.06	334.7	15.09
		158.5	420.4	18.98	397.4	18.01	375.9	17.52	367.7	16.55	351.2	16.06	334.7	14.60
	77	66.0	420.4	17.52	397.4	16.55	375.9	15.57	367.7	15.09	351.2	14.11	334.7	13.14
		127.0	420.4	17.03	397.4	16.06	375.9	15.09	367.7	14.60	351.2	14.11	334.7	13.14
		158.5	420.4	16.55	397.4	15.57	375.9	15.09	367.7	14.60	351.2	13.63	334.7	13.14
	86	66.0	420.4	15.57	397.4	14.60	375.9	13.63	367.7	13.14	351.2	12.65	334.7	11.68
		127.0	420.4	15.09	397.4	14.11	375.9	13.14	367.7	13.14	351.2	12.17	334.7	11.68
		158.5	420.4	15.09	397.4	14.11	375.9	13.14	367.7	12.65	351.2	12.17	334.7	11.68
	95	66.0	420.4	14.11	397.4	13.14	375.9	12.17	367.7	12.17	351.2	11.19	334.7	10.71
		127.0	420.4	13.63	397.4	12.65	375.9	12.17	367.7	11.68	351.2	11.19	334.7	10.22
		158.5	420.4	13.63	397.4	12.65	375.9	11.68	367.7	11.68	351.2	11.19	334.7	10.22
	104	66.0	420.4	13.14	397.4	12.17	375.9	11.19	367.7	10.71	351.2	10.22	334.7	9.73
		127.0	420.4	12.65	397.4	11.68	375.9	10.71	367.7	10.71	351.2	10.22	334.7	9.25
		158.5	420.4	12.65	397.4	11.68	375.9	10.71	367.7	10.22	351.2	9.73	334.7	9.25
	113	66.0	420.4	12.17	397.4	11.19	375.9	10.22	367.7	9.25	351.2	9.25	334.7	8.76
		127.0	420.4	11.68	397.4	10.71	375.9	9.25	367.7	9.73	351.2	9.25	334.7	8.27
		158.5	420.4	11.68	397.4	10.71	375.9	9.73	367.7	8.76	351.2	8.27	334.7	8.27
60	23	66.0	149.6	14.60	139.9	14.06	132.7	13.49	131.1	12.54	130.6	12.35	127.9	11.02
		127.0	169.3	15.85	158.3	15.26	150.2	14.64	148.3	13.61	147.8	13.40	144.8	11.96
		158.5	187.0	17.09	174.9	16.46	165.9	15.79	163.8	14.68	163.3	14.45	159.9	12.90
	32	66.0	260.0	21.00	239.4	20.22	223.6	19.40	218.8	18.04	216.2	17.76	207.8	15.85
		127.0	266.1	21.24	245.0	20.46	228.8	19.62	223.9	18.25	221.2	17.97	212.7	16.03
		158.5	270.2	21.24	248.8	20.46	232.3	19.62	227.4	18.25	224.6	17.97	215.9	16.03
	41	66.0	358.0	22.90	337.6	22.06	323.0	21.16	314.9	19.67	301.7	19.37	286.9	17.29
		127.0	361.1	23.37	340.2	22.51	323.2	21.59	314.9	20.08	301.7	19.77	286.9	17.64
		158.5	361.1	23.54	339.6	22.67	323.2	21.75	314.9	20.22	301.7	19.91	286.9	17.77
	50	66.0	359.6	20.94	338.6	20.03	323.1	19.10	314.9	17.87	301.7	17.47	286.9	15.70
		127.0	361.1	20.93	339.9	20.01	323.2	19.07	314.9	18.07	301.7	17.43	286.9	15.88
		158.5	361.1	21.02	339.6	19.85	323.2	18.90	314.9	17.90	301.7	17.25	286.9	15.70
	59	66.0	361.1	18.98	339.6	18.01	323.2	17.03	314.9	16.06	301.7	15.57	286.9	14.11
		127.0	361.1	18.49	339.6	17.52	323.2	16.55	314.9	16.06	301.7	15.09	286.9	14.11
		158.5	361.1	18.49	339.6	17.03	323.2	16.06	314.9	15.57	301.7	14.60	286.9	13.63
	68	66.0	361.1	16.55	339.6	15.57	323.2	14.60	314.9	14.11	301.7	13.63	286.9	12.65
		127.0	361.1	16.06	339.6	15.09	323.2	14.11	314.9	13.63	301.7	13.14	286.9	12.17
		158.5	361.1	16.06	339.6	15.09	323.2	14.11	314.9	13.63	301.7	13.14	286.9	12.17
	77	66.0	361.1	14.60	339.6	13.63	323.2	12.65	314.9	12.65	301.7	11.68	286.9	11.19
		127.0	361.1	14.11	339.6	13.14	323.2	12.65	314.9	12.17	301.7	11.68	286.9	10.71
		158.5	361.1	14.11	339.6	13.14	323.2	12.17	314.9	12.17	301.7	11.68	286.9	10.71
	86	66.0	361.1	13.14	339.6	12.17	323.2	11.68	314.9	11.19	301.7	10.71	286.9	10.22
		127.0	361.1	12.65	339.6	11.68	323.2	11.19	314.9	10.71	301.7	10.22	286.9	9.73
		158.5	361.1	12.65	339.6	11.68	323.2	11.19	314.9	10.71	301.7	10.22	286.9	9.73
	95	66.0	361.1	11.68	339.6	11.19	323.2	10.22	314.9	10.22	301.7	9.73	286.9	9.25
		127.0	361.1	11.68	339.6	10.71	323.2	10.22	314.9	9.73	301.7	9.25	286.9	8.76
		158.5	361.1	11.68	339.6	10.71	323.2	9.73	314.9	9.73	301.7	9.25	286.9	8.76
	104	66.0	361.1	10.71	339.6	10.22	323.2	9.25	314.9	9.25	301.7	8.76	286.9	8.27
		127.0	361.1	10.71	339.6	9.73	323.2	9.25	314.9	8.76	301.7	8.27	286.9	8.27
		158.5	361.1	10.71	339.6	9.73	323.2	9.25	314.9	8.76	301.7	8.27	286.9	8.27
	113	66.0	361.1	9.73	339.6	9.25	323.2	8.27	314.9	8.27	301.7	7.79	286.9	7.30
		127.0	361.1	9.73	339.6	8.76	323.2	8.27	314.9	7.79	301.7	7.30	286.9	7.79
		158.5	361.1	9.73	339.6	8.76	323.2	8.76	314.9	7.79	301.7	7.30	286.9	7.79

TC = Total Heating Capacity (MBh).
PI = Power input (KW).

Power input (KW) includes compressor(s) and controls.
Test condition based on 25 feet of equivalent refrigerant piping and no change in elevation between indoor unit and water source unit.

LG

Due to our policy of continuous product innovation, some specifications may change without notification.
©LG Electronics U.S.A., Inc., Englewood Cliffs, NJ. All rights reserved. "LG" is a registered trademark of LG Corp.

PERFORMANCE DATA

Heating Capacity—ARWB480DA2 / ARWN480DA2 (460 Volt)

Table 29e: Heating Capacity ARWB480DA2 / ARWN480DA2

Combination Ratio (%) (Capacity index)	Inlet Water Temperature (°F)	Water Flow Rate (gpm)	Indoor Unit Entering Air Wet Bulb Temperature °F											
			61		65		68		70		72		75	
			TC	PI	TC	PI	TC	PI	TC	PI	TC	PI	TC	PI
			MBh	kW	MBh	kW	MBh	kW	MBh	kW	MBh	kW	MBh	kW
50	23	66.0	124.3	11.61	116.8	11.02	110.4	10.41	109.1	9.88	108.5	9.26	106.6	8.74
		127.0	140.7	12.60	132.2	11.96	124.9	11.29	123.5	10.72	122.8	10.05	120.6	9.49
		158.5	155.4	13.58	146.0	12.90	138.0	12.18	136.4	11.57	135.6	10.84	133.3	10.23
	32	66.0	216.1	16.69	199.9	15.85	185.9	14.97	182.2	14.21	179.6	13.32	173.2	12.57
		127.0	221.2	16.88	204.6	16.03	190.3	15.14	186.4	14.38	183.8	13.47	177.2	12.72
		158.5	224.5	16.88	207.7	16.03	193.2	15.14	189.3	14.38	186.6	13.47	180.0	12.72
	41	66.0	297.5	18.21	281.9	17.29	268.6	16.32	262.2	15.50	250.6	14.53	239.1	13.71
		127.0	300.1	18.58	284.0	17.64	268.8	16.66	262.2	15.82	250.6	14.82	239.1	13.99
		158.5	300.1	18.71	283.6	17.77	268.8	16.78	262.2	15.93	250.6	14.93	239.1	14.09
	50	66.0	298.8	16.65	282.7	15.70	268.7	14.73	262.2	14.08	250.6	13.10	239.1	12.45
		127.0	300.1	16.59	283.8	15.63	268.8	14.65	262.2	13.99	250.6	13.25	239.1	12.35
		158.5	300.1	16.66	283.6	15.70	268.8	14.71	262.2	14.05	250.6	13.06	239.1	12.40
	59	66.0	300.1	15.09	283.6	14.11	268.8	13.14	262.2	12.65	250.6	11.68	239.1	11.19
		127.0	300.1	14.60	283.6	13.63	268.8	12.65	262.2	12.17	250.6	11.68	239.1	10.71
		158.5	300.1	14.60	283.6	13.63	268.8	12.65	262.2	12.17	250.6	11.19	239.1	10.71
	68	66.0	300.1	13.14	283.6	12.17	268.8	11.68	262.2	11.19	250.6	10.71	239.1	9.73
		127.0	300.1	12.65	283.6	11.68	268.8	11.19	262.2	10.71	250.6	10.22	239.1	9.73
		158.5	300.1	12.65	283.6	11.68	268.8	11.19	262.2	10.71	250.6	10.22	239.1	9.73
	77	66.0	300.1	11.68	283.6	10.71	268.8	10.22	262.2	9.73	250.6	9.25	239.1	8.76
		127.0	300.1	11.19	283.6	10.71	268.8	9.73	262.2	9.73	250.6	9.25	239.1	8.76
		158.5	300.1	11.19	283.6	10.71	268.8	9.73	262.2	9.73	250.6	9.25	239.1	8.76
	86	66.0	300.1	10.71	283.6	9.73	268.8	9.25	262.2	8.76	250.6	8.76	239.1	8.27
		127.0	300.1	10.22	283.6	9.25	268.8	8.76	262.2	8.76	250.6	8.27	239.1	7.79
		158.5	300.1	10.22	283.6	9.25	268.8	8.76	262.2	8.76	250.6	8.27	239.1	7.79
	95	66.0	300.1	9.73	283.6	8.76	268.8	8.27	262.2	8.27	250.6	7.79	239.1	7.30
		127.0	300.1	9.25	283.6	8.76	268.8	8.27	262.2	7.79	250.6	7.79	239.1	7.30
		158.5	300.1	9.25	283.6	8.76	268.8	8.27	262.2	7.79	250.6	7.79	239.1	7.30
	104	66.0	300.1	8.76	283.6	8.27	268.8	7.79	262.2	7.30	250.6	7.30	239.1	6.81
		127.0	300.1	8.27	283.6	7.79	268.8	7.30	262.2	7.30	250.6	6.81	239.1	6.81
		158.5	300.1	8.27	283.6	7.79	268.8	7.30	262.2	7.30	250.6	6.81	239.1	6.81
	113	66.0	300.1	7.79	283.6	7.79	268.8	7.30	262.2	6.33	250.6	6.81	239.1	6.33
		127.0	300.1	7.30	283.6	6.81	268.8	6.33	262.2	6.81	250.6	5.84	239.1	6.33
		158.5	300.1	7.30	283.6	6.81	268.8	6.33	262.2	6.81	250.6	5.84	239.1	6.33

TC = Total Heating Capacity (MBh).
PI = Power input (KW).
Power input (KW) includes compressor(s) and controls.
Test condition based on 25 feet of equivalent refrigerant piping and no change in elevation between indoor unit and water source unit.

Due to our policy of continuous product innovation, some specifications may change without notification.
©LG Electronics U.S.A., Inc., Englewood Cliffs, NJ. All rights reserved. "LG" is a registered trademark of LG Corp.

Table 30a: Heating Capacity ARWB580DA2 / ARWN580DA2

Combination Ratio (%) (Capacity index)	Inlet Water Temperature (°F)	Water Flow Rate (gpm)	Indoor Unit Entering Air Wet Bulb Temperature °F											
			61		65		68		70		72		75	
			TC MBh	PI kW	TC MBh	PI kW	TC MBh	PI kW	TC MBh	PI kW	TC MBh	PI kW	TC MBh	PI kW
130	23	79.2	315.6	37.32	313.0	35.18	311.3	32.80	307.1	31.89	310.9	30.99	302.6	27.79
		152.4	357.1	39.84	354.1	37.82	352.2	35.60	347.5	34.61	351.9	33.63	342.5	30.16
		190.2	394.5	42.37	391.2	40.46	389.1	38.39	383.9	37.32	388.7	36.27	378.3	32.53
	32	79.2	548.5	50.30	535.5	48.75	524.2	47.17	512.8	45.86	514.6	44.57	491.6	39.97
		152.4	561.4	50.79	548.1	49.27	536.5	47.72	524.8	46.39	526.6	45.09	503.1	40.43
		190.2	570.0	50.79	556.5	49.27	544.7	47.72	532.8	46.39	534.7	45.09	510.8	40.43
	41	79.2	787.5	54.16	774.5	52.79	757.4	51.45	738.0	50.02	718.2	48.61	678.6	43.59
		152.4	798.6	55.11	780.3	53.78	757.8	52.50	738.0	51.04	718.2	49.61	678.6	44.48
		190.2	803.3	55.45	782.6	54.14	757.8	52.88	738.0	51.41	718.2	49.96	678.6	44.80
	50	79.2	790.8	48.95	776.8	47.45	757.6	46.61	738.0	45.43	718.2	43.85	678.6	39.59
		152.4	809.2	48.55	791.6	47.60	769.6	46.96	749.9	45.35	729.1	43.76	689.5	39.45
		190.2	813.5	49.25	796.7	48.25	774.6	47.15	753.8	45.54	734.0	44.47	693.5	41.36
	59	79.2	794.0	43.75	779.1	42.12	757.8	41.77	738.0	40.83	718.2	39.08	678.6	35.58
		152.4	819.7	42.00	802.8	41.42	781.5	41.42	761.7	39.67	740.0	37.92	700.4	34.42
		190.2	823.7	43.05	810.8	42.35	791.4	41.42	769.6	39.67	749.9	38.97	708.3	37.92
	68	79.2	823.7	40.25	808.8	38.62	787.5	37.80	765.7	36.75	743.9	36.05	700.4	34.42
		152.4	849.4	39.08	834.5	38.50	811.2	37.68	789.4	37.33	769.6	36.98	726.1	33.25
		190.2	853.3	39.08	840.4	38.50	821.1	37.92	797.3	37.33	775.6	36.98	732.1	35.35
	77	79.2	862.6	38.50	840.9	37.45	821.1	36.75	805.3	36.17	787.5	35.58	741.9	33.25
		152.4	862.6	37.92	840.9	37.22	821.1	36.17	805.3	35.58	787.5	35.00	741.9	32.67
		190.2	862.6	37.33	840.9	36.28	821.1	35.58	805.3	35.00	787.5	34.42	741.9	32.08
	86	79.2	862.6	37.33	840.9	35.70	821.1	35.23	805.3	34.42	787.5	33.83	741.9	31.50
		152.4	862.6	36.17	840.9	35.47	821.1	34.42	805.3	33.83	787.5	32.67	741.9	30.33
		190.2	862.6	35.58	840.9	34.53	821.1	33.83	805.3	33.25	787.5	32.67	741.9	30.33
	95	79.2	862.6	35.58	840.9	34.53	821.1	33.83	805.3	32.67	787.5	31.50	741.9	29.17
		152.4	862.6	34.42	840.9	33.72	821.1	33.25	805.3	32.08	787.5	30.92	741.9	28.00
		190.2	862.6	34.42	840.9	33.37	821.1	32.67	805.3	31.50	787.5	30.33	741.9	28.00
	104	79.2	862.6	34.42	840.9	33.37	821.1	32.67	805.3	31.50	787.5	30.33	741.9	27.42
		152.4	862.6	33.25	840.9	32.55	821.1	31.50	805.3	30.33	787.5	29.17	741.9	26.25
		190.2	862.6	32.67	840.9	31.97	821.1	31.50	805.3	30.33	787.5	29.17	741.9	26.25
	113	79.2	862.6	33.25	840.9	32.20	821.1	31.50	805.3	30.33	787.5	29.17	741.9	25.67
		152.4	862.6	32.08	840.9	31.38	821.1	29.75	805.3	28.58	787.5	27.42	741.9	24.50
		190.2	862.6	30.92	840.9	30.57	821.1	30.33	805.3	29.17	787.5	28.00	741.9	24.50
120	23	79.2	300.0	37.32	297.5	35.18	295.8	32.80	292.3	31.44	294.7	30.53	286.8	27.34
		152.4	339.5	39.84	336.6	37.82	334.7	35.60	330.8	34.11	333.4	33.13	324.5	29.66
		190.2	375.1	42.37	371.8	40.46	369.8	38.39	365.4	36.79	368.3	35.73	358.5	31.99
	32	79.2	521.5	50.30	509.0	48.75	498.2	47.17	488.1	45.21	487.6	43.91	465.8	39.31
		152.4	533.7	50.79	521.0	49.27	509.9	47.72	499.5	45.73	499.0	44.41	476.7	39.76
		190.2	541.9	50.79	528.9	49.27	517.7	47.72	507.1	45.73	506.7	44.41	484.0	39.76
	41	79.2	750.3	54.16	737.2	52.79	719.8	51.45	702.4	49.31	680.6	47.89	643.0	42.88
		152.4	760.8	55.11	742.6	53.78	720.2	52.50	702.4	50.31	680.6	48.87	643.0	43.75
		190.2	765.2	55.45	738.4	54.14	720.2	52.88	702.4	50.68	680.6	49.22	643.0	44.07
	50	79.2	753.3	48.60	739.3	47.28	720.0	46.26	702.4	44.78	680.6	43.19	643.0	38.94
		152.4	767.5	49.25	751.0	47.95	728.1	46.96	710.3	44.99	687.5	43.10	649.9	39.08
		190.2	771.7	49.07	748.6	47.95	731.1	47.15	713.3	45.17	690.5	43.28	652.9	40.41
	59	79.2	756.4	43.05	741.5	41.77	720.2	41.07	702.4	40.25	680.6	38.50	643.0	35.00
		152.4	774.2	43.40	759.3	42.12	736.0	41.42	718.2	39.67	694.5	37.33	656.9	34.42
		190.2	778.2	42.70	758.8	41.77	741.9	41.42	724.1	39.67	700.4	37.33	662.8	36.75
	68	79.2	778.2	38.62	763.3	37.10	740.0	36.17	720.2	35.58	696.4	35.00	658.8	33.13
		152.4	797.9	38.62	781.1	37.68	755.8	36.75	738.0	36.17	714.2	34.88	674.7	32.67
		190.2	801.9	38.27	780.6	37.33	761.7	36.75	741.9	36.17	718.2	35.00	678.6	33.83
	77	79.2	811.2	36.40	787.5	34.77	761.7	34.07	745.9	33.25	726.1	32.67	686.6	30.33
		152.4	813.2	35.82	787.5	34.53	761.7	33.83	745.9	32.67	726.1	32.08	686.6	29.75
		190.2	815.2	34.53	787.5	33.60	761.7	33.25	745.9	32.67	726.1	31.50	686.6	29.75
	86	79.2	815.2	34.65	787.5	33.02	761.7	32.08	745.9	30.92	726.1	30.33	686.6	28.00
		152.4	815.2	33.48	787.5	32.20	761.7	31.50	745.9	30.33	726.1	29.17	686.6	27.42
		190.2	815.2	32.43	787.5	31.50	761.7	30.92	745.9	30.33	726.1	29.17	686.6	26.83
	95	79.2	815.2	32.90	787.5	31.27	761.7	30.33	745.9	29.17	726.1	28.00	686.6	25.67
		152.4	815.2	31.03	787.5	30.10	761.7	29.17	745.9	28.00	726.1	26.83	686.6	25.08
		190.2	815.2	30.68	787.5	29.87	761.7	29.17	745.9	28.00	726.1	26.83	686.6	24.50
	104	79.2	815.2	31.73	787.5	29.75	761.7	28.58	745.9	27.42	726.1	26.25	686.6	23.92
		152.4	815.2	29.28	787.5	28.35	761.7	27.42	745.9	26.25	726.1	25.08	686.6	23.33
		190.2	815.2	28.93	787.5	28.00	761.7	27.42	745.9	26.25	726.1	25.08	686.6	22.75
	113	79.2	815.2	30.57	787.5	28.23	761.7	26.83	745.9	25.67	726.1	24.50	686.6	22.17
		152.4	815.2	27.53	787.5	26.60	761.7	25.67	745.9	24.50	726.1	23.33	686.6	21.58
		190.2	815.2	27.18	787.5	26.13	761.7	25.67	745.9	24.50	726.1	23.33	686.6	21.00

TC = Total Heating Capacity (MBh).
PI = Power input (KW).

Power input (KW) includes compressor(s) and controls.
Test condition based on 25 feet of equivalent refrigerant piping and no change in elevation between indoor unit and water source unit.

LG

Due to our policy of continuous product innovation, some specifications may change without notification.
©LG Electronics U.S.A., Inc., Englewood Cliffs, NJ. All rights reserved. "LG" is a registered trademark of LG Corp.

PERFORMANCE DATA

Heating Capacity—ARWB580DA2 / ARWN580DA2 (460 Volt)

Table 30b: Heating Capacity ARWB580DA2 / ARWN580DA2

Combination Ratio (%) (Capacity index)	Inlet Water Temperature (°F)	Water Flow Rate (gpm)	Indoor Unit Entering Air Wet Bulb Temperature °F											
			61		65		68		70		72		75	
			TC MBh	PI kW	TC MBh	PI kW	TC MBh	PI kW	TC MBh	PI kW	TC MBh	PI kW	TC MBh	PI kW
110	23	79.2	283.7	37.77	282.0	35.18	280.4	32.80	277.5	31.44	277.5	30.53	271.8	27.34
		152.4	321.0	40.33	319.1	37.82	317.3	35.60	314.0	34.11	314.1	33.13	307.5	29.66
		190.2	354.6	42.89	352.5	40.46	350.5	38.39	346.9	36.79	346.9	35.73	339.7	31.99
	32	79.2	493.0	50.94	482.6	48.75	472.2	47.17	463.3	45.21	459.3	43.91	441.4	39.31
		152.4	504.5	51.44	493.9	49.27	483.3	47.72	474.2	45.73	470.0	44.41	451.8	39.76
		190.2	512.2	51.44	501.4	49.27	490.7	47.72	481.4	45.73	477.2	44.41	458.7	39.76
	41	79.2	717.5	54.86	699.8	52.79	682.2	51.45	666.8	49.31	641.0	47.89	609.4	42.88
		152.4	727.5	55.83	705.0	53.78	682.6	52.50	666.8	50.31	641.0	48.87	609.4	43.75
		190.2	731.6	56.17	707.1	54.14	682.6	52.88	666.8	50.68	641.0	49.22	609.4	44.07
	50	79.2	720.4	49.07	701.9	47.45	682.4	46.43	666.8	44.78	641.0	43.19	609.4	38.94
		152.4	731.3	49.44	709.4	47.95	686.5	46.96	670.7	44.99	645.0	43.10	612.4	39.08
		190.2	735.4	49.44	712.4	47.95	688.5	46.86	671.7	44.88	646.0	43.28	614.3	39.53
	59	79.2	723.3	43.28	703.9	42.12	682.6	41.42	666.8	40.25	641.0	38.50	609.4	35.00
		152.4	735.1	43.05	713.8	42.12	690.5	41.42	674.7	39.67	649.0	37.33	615.3	34.42
		190.2	739.1	42.70	717.8	41.77	694.5	40.83	676.7	39.08	650.9	37.33	619.3	35.00
	68	79.2	737.1	37.45	715.8	36.52	692.5	35.58	674.7	35.00	649.0	33.83	615.3	31.73
		152.4	752.9	37.80	725.7	36.52	700.4	35.58	684.6	35.00	656.9	33.25	625.2	31.50
		190.2	756.9	37.80	731.6	36.52	704.4	35.58	686.6	34.42	660.8	33.25	627.2	31.50
	77	79.2	757.8	33.95	734.0	32.67	704.4	32.08	688.5	30.92	664.8	29.75	629.2	27.42
		152.4	763.7	33.72	734.0	32.08	704.4	31.50	688.5	30.33	664.8	29.17	629.2	27.42
		190.2	767.7	33.72	734.0	32.20	704.4	30.92	688.5	30.33	664.8	28.58	629.2	26.83
	86	79.2	767.7	30.92	734.0	29.75	704.4	28.58	688.5	28.00	664.8	26.25	629.2	24.50
		152.4	767.7	30.33	734.0	29.17	704.4	28.00	688.5	27.42	664.8	25.67	629.2	23.92
		190.2	767.7	30.10	734.0	28.58	704.4	27.42	688.5	26.83	664.8	25.67	629.2	23.92
	95	79.2	767.7	29.17	734.0	27.42	704.4	26.25	688.5	25.08	664.8	23.92	629.2	22.17
		152.4	767.7	28.00	734.0	26.83	704.4	25.67	688.5	24.50	664.8	23.33	629.2	21.58
		190.2	767.7	27.30	734.0	26.25	704.4	25.08	688.5	24.50	664.8	23.33	629.2	21.58
	104	79.2	767.7	27.42	734.0	26.25	704.4	24.50	688.5	23.33	664.8	22.17	629.2	20.42
		152.4	767.7	26.25	734.0	25.08	704.4	23.33	688.5	22.75	664.8	21.58	629.2	19.83
		190.2	767.7	25.90	734.0	24.50	704.4	23.33	688.5	22.17	664.8	21.00	629.2	19.25
	113	79.2	767.7	25.67	734.0	25.08	704.4	22.75	688.5	21.58	664.8	20.42	629.2	18.67
		152.4	767.7	24.50	734.0	23.33	704.4	21.00	688.5	21.00	664.8	19.83	629.2	18.08
		190.2	767.7	24.50	734.0	22.75	704.4	21.58	688.5	19.83	664.8	18.67	629.2	16.92
100	23	79.2	268.1	37.77	266.5	35.64	264.9	32.80	262.7	31.44	260.4	30.07	255.9	27.34
		152.4	303.3	40.33	301.6	38.31	299.8	35.60	297.2	34.11	294.7	32.63	289.5	29.66
		190.2	335.1	42.89	333.1	40.99	331.2	38.39	328.3	36.79	325.5	35.19	319.9	31.99
	32	79.2	465.9	50.94	456.1	49.41	446.2	47.17	438.6	45.21	430.9	43.24	415.6	39.31
		152.4	476.8	51.44	466.7	49.93	456.7	47.72	448.8	45.73	441.0	43.74	425.4	39.76
		190.2	484.1	51.44	473.9	49.93	463.6	47.72	455.7	45.73	447.8	43.74	431.9	39.76
	41	79.2	686.7	54.86	662.4	53.51	644.7	51.45	631.2	49.31	601.5	47.16	573.8	42.88
		152.4	696.1	55.83	667.3	54.51	645.0	52.50	631.2	50.31	601.5	48.13	573.8	43.75
		190.2	700.0	56.17	669.3	54.88	645.0	52.88	631.2	50.68	601.5	48.47	573.8	44.07
	50	79.2	689.4	49.07	664.4	47.93	644.8	46.43	631.2	44.78	601.5	42.54	573.8	38.94
		152.4	696.1	49.96	667.8	48.49	645.0	46.96	631.2	44.99	601.5	42.73	573.8	39.08
		190.2	701.0	49.79	670.8	48.50	645.0	46.86	631.2	44.88	601.5	42.61	573.8	38.95
	59	79.2	692.1	43.28	666.3	42.35	645.0	41.42	631.2	40.25	601.5	37.92	573.8	35.00
		152.4	696.1	44.10	668.3	42.47	645.0	41.42	631.2	39.67	601.5	37.33	573.8	34.42
		190.2	702.0	43.40	672.3	42.12	645.0	40.83	631.2	39.08	601.5	36.75	573.8	33.83
	68	79.2	698.1	36.98	670.3	35.93	645.0	35.00	631.2	34.42	601.5	32.08	573.8	30.33
		152.4	708.0	37.68	672.3	36.05	645.0	35.00	631.2	33.83	601.5	31.50	573.8	29.17
		190.2	711.9	36.98	678.2	35.70	645.0	34.42	631.2	33.25	601.5	30.92	573.8	28.58
	77	79.2	706.3	32.20	680.6	31.03	645.0	29.75	631.2	28.58	601.5	26.83	573.8	24.50
		152.4	716.2	32.32	680.6	30.33	645.0	29.17	631.2	28.00	601.5	26.25	573.8	24.50
		190.2	720.2	31.62	680.6	30.10	645.0	28.58	631.2	27.42	601.5	26.25	573.8	23.92
	86	79.2	720.2	29.17	680.6	26.83	645.0	25.08	631.2	24.50	601.5	22.75	573.8	21.58
		152.4	720.2	28.58	680.6	26.25	645.0	24.85	631.2	23.92	601.5	22.75	573.8	21.00
		190.2	720.2	28.00	680.6	26.25	645.0	24.50	631.2	23.92	601.5	22.17	573.8	21.00
	95	79.2	720.2	26.83	680.6	24.50	645.0	22.17	631.2	21.58	601.5	20.42	573.8	18.67
		152.4	720.2	25.67	680.6	23.33	645.0	21.93	631.2	21.00	601.5	19.83	573.8	18.08
		190.2	720.2	25.67	680.6	23.33	645.0	21.58	631.2	21.00	601.5	19.83	573.8	18.08
	104	79.2	720.2	25.08	680.6	22.75	645.0	19.83	631.2	19.25	601.5	18.08	573.8	16.92
		152.4	720.2	23.92	680.6	21.58	645.0	19.60	631.2	18.67	601.5	17.50	573.8	16.33
		190.2	720.2	23.33	680.6	21.58	645.0	19.25	631.2	18.67	601.5	17.50	573.8	16.33
	113	79.2	720.2	23.33	680.6	21.00	645.0	17.50	631.2	16.92	601.5	15.75	573.8	15.17
		152.4	720.2	22.17	680.6	19.83	645.0	17.27	631.2	16.33	601.5	15.17	573.8	14.58
		190.2	720.2	21.00	680.6	19.83	645.0	16.92	631.2	16.33	601.5	15.17	573.8	14.58

TC = Total Heating Capacity (MBh).
PI = Power input (KW).

Power input (KW) includes compressor(s) and controls.
Test condition based on 25 feet of equivalent refrigerant piping and no change in elevation between indoor unit and water source unit.

Due to our policy of continuous product innovation, some specifications may change without notification.
©LG Electronics U.S.A., Inc., Englewood Cliffs, NJ. All rights reserved. "LG" is a registered trademark of LG Corp.

PERFORMANCE DATA

Heating Capacity—ARWB580DA2 / ARWN580DA2 (460 Volt)

Table 30c: Heating Capacity ARWB580DA2 / ARWN580DA2

Combination Ratio (%) (Capacity index)	Inlet Water Temperature (°F)	Water Flow Rate (gpm)	Indoor Unit Entering Air Wet Bulb Temperature °F											
			61		65		68		70		72		75	
			TC MBh	PI kW	TC MBh	PI kW	TC MBh	PI kW	TC MBh	PI kW	TC MBh	PI kW	TC MBh	PI kW
90	23	79.2	253.3	35.08	245.3	31.99	238.1	28.18	236.3	26.88	234.7	25.91	230.3	23.24
		152.4	286.6	37.41	277.6	34.36	269.4	30.58	267.4	29.17	265.6	28.11	260.6	25.21
		190.2	316.7	39.74	306.6	36.73	297.6	32.98	295.4	31.46	293.4	30.32	287.9	27.19
	32	79.2	440.3	47.07	419.8	44.17	401.0	40.53	394.6	38.66	388.4	37.25	374.1	33.41
		152.4	450.6	47.52	429.6	44.63	410.4	41.00	403.8	39.10	397.5	37.68	382.8	33.80
		190.2	457.5	47.52	436.2	44.63	416.7	41.00	410.0	39.10	403.6	37.68	388.7	33.80
	41	79.2	619.1	50.64	598.4	47.79	579.4	44.20	567.8	42.16	542.1	40.63	516.4	36.44
		152.4	621.6	51.52	596.4	48.68	579.7	45.11	567.8	43.02	542.1	41.46	516.4	37.19
		190.2	625.3	51.83	598.3	49.00	579.7	45.43	567.8	43.33	542.1	41.76	516.4	37.46
	50	79.2	621.7	44.51	600.2	42.39	579.6	39.89	567.8	38.29	542.1	36.65	516.4	33.10
		152.4	620.7	44.66	597.0	42.54	579.7	40.05	567.8	38.43	542.1	36.48	516.4	33.18
		190.2	624.5	44.52	598.9	42.41	579.7	39.92	567.8	38.29	542.1	36.63	516.4	33.31
	59	79.2	624.3	38.38	602.0	36.98	579.7	35.58	567.8	34.42	542.1	32.67	516.4	29.75
		152.4	619.8	37.80	597.5	36.40	579.7	35.00	567.8	33.83	542.1	31.50	516.4	29.17
		190.2	623.8	37.22	599.5	35.82	579.7	34.42	567.8	33.25	542.1	31.50	516.4	29.17
	68	79.2	628.2	32.55	604.0	31.50	579.7	30.33	567.8	29.17	542.1	28.00	516.4	26.25
		152.4	625.7	32.55	599.5	31.15	579.7	29.75	567.8	28.58	542.1	26.83	516.4	25.08
		190.2	627.7	31.97	601.5	30.92	579.7	29.75	567.8	28.58	542.1	26.83	516.4	25.08
	77	79.2	641.0	28.35	613.3	26.83	579.7	25.67	567.8	24.50	542.1	23.33	516.4	21.58
		152.4	647.0	28.12	613.3	26.60	579.7	25.08	567.8	24.50	542.1	22.75	516.4	21.00
		190.2	649.0	27.42	613.3	26.02	579.7	25.08	567.8	23.92	542.1	22.75	516.4	21.00
	86	79.2	649.0	25.67	613.3	23.92	579.7	22.17	567.8	21.58	542.1	20.42	516.4	18.67
		152.4	649.0	25.08	613.3	23.33	579.7	21.58	567.8	21.00	542.1	19.83	516.4	18.67
		190.2	649.0	24.50	613.3	22.75	579.7	21.58	567.8	21.00	542.1	19.83	516.4	18.08
	95	79.2	649.0	23.33	613.3	21.58	579.7	19.83	567.8	19.25	542.1	18.08	516.4	16.92
		152.4	649.0	22.75	613.3	21.00	579.7	19.25	567.8	18.67	542.1	17.50	516.4	16.33
		190.2	649.0	22.17	613.3	20.42	579.7	18.67	567.8	18.08	542.1	17.50	516.4	16.33
	104	79.2	649.0	21.58	613.3	19.83	579.7	17.50	567.8	16.92	542.1	16.33	516.4	15.17
		152.4	649.0	20.42	613.3	19.25	579.7	16.92	567.8	16.33	542.1	15.75	516.4	14.58
		190.2	649.0	20.42	613.3	19.25	579.7	16.92	567.8	16.33	542.1	15.75	516.4	14.58
	113	79.2	649.0	19.83	613.3	18.08	579.7	15.17	567.8	14.58	542.1	14.58	516.4	13.42
		152.4	649.0	18.08	613.3	17.50	579.7	14.58	567.8	14.00	542.1	14.00	516.4	12.83
		190.2	649.0	18.67	613.3	18.08	579.7	15.17	567.8	14.58	542.1	14.00	516.4	12.83
80	23	79.2	239.4	25.13	224.1	24.15	212.1	23.10	210.0	22.32	209.0	21.28	204.7	19.59
		152.4	270.9	27.27	253.6	26.20	240.0	25.07	237.6	24.23	236.5	23.09	231.6	21.26
		190.2	299.2	29.41	280.2	28.26	265.1	27.04	262.5	26.13	261.3	24.90	255.9	22.93
	32	79.2	416.0	36.14	383.5	34.72	357.2	33.22	350.6	32.10	345.9	30.60	332.5	28.17
		152.4	425.8	36.56	392.5	35.12	365.6	33.60	358.8	32.47	354.0	30.95	340.3	28.50
		190.2	432.3	36.56	398.5	35.12	371.2	33.60	364.3	32.47	359.4	30.95	345.5	28.50
	41	79.2	572.8	39.42	540.8	37.87	516.1	36.23	504.5	35.01	482.8	33.38	459.0	30.73
		152.4	577.7	40.22	544.9	38.65	516.4	36.97	504.5	35.73	482.8	34.06	459.0	31.35
		190.2	577.7	40.51	544.1	38.92	516.4	37.24	504.5	35.99	482.8	34.30	459.0	31.58
	50	79.2	575.3	36.04	542.5	34.39	516.3	32.70	504.5	31.80	482.8	30.11	459.0	27.91
		152.4	577.7	35.86	544.5	34.20	516.4	32.78	504.5	31.86	482.8	30.15	459.0	27.93
		190.2	577.7	35.72	544.1	34.34	516.4	32.91	504.5	31.70	482.8	29.99	459.0	27.75
	59	79.2	577.7	32.67	544.1	30.92	516.4	29.17	504.5	28.58	482.8	26.83	459.0	25.08
		152.4	577.7	31.50	544.1	29.75	516.4	28.58	504.5	28.00	482.8	26.25	459.0	24.50
		190.2	577.7	30.92	544.1	29.75	516.4	28.58	504.5	27.42	482.8	25.67	459.0	23.92
	68	79.2	577.7	27.42	544.1	26.25	516.4	25.08	504.5	24.50	482.8	23.33	459.0	21.58
		152.4	577.7	26.83	544.1	25.67	516.4	25.08	504.5	23.92	482.8	22.75	459.0	21.00
		190.2	577.7	26.25	544.1	25.08	516.4	24.50	504.5	23.92	482.8	22.17	459.0	21.00
	77	79.2	577.7	24.50	544.1	22.75	516.4	21.58	504.5	21.00	482.8	19.83	459.0	18.67
		152.4	577.7	23.92	544.1	22.17	516.4	21.58	504.5	20.42	482.8	19.25	459.0	18.08
		190.2	577.7	23.33	544.1	22.17	516.4	21.00	504.5	20.42	482.8	19.25	459.0	18.08
	86	79.2	577.7	21.58	544.1	20.42	516.4	19.25	504.5	18.67	482.8	17.50	459.0	16.33
		152.4	577.7	21.00	544.1	19.83	516.4	18.67	504.5	18.08	482.8	16.92	459.0	15.75
		190.2	577.7	21.00	544.1	19.83	516.4	18.67	504.5	18.08	482.8	16.92	459.0	15.75
	95	79.2	577.7	19.83	544.1	18.67	516.4	16.92	504.5	16.33	482.8	15.75	459.0	14.58
		152.4	577.7	19.25	544.1	18.08	516.4	16.33	504.5	16.33	482.8	15.17	459.0	14.58
		190.2	577.7	19.25	544.1	17.50	516.4	16.33	504.5	15.75	482.8	15.17	459.0	14.00
	104	79.2	577.7	18.67	544.1	16.92	516.4	15.17	504.5	15.17	482.8	14.00	459.0	13.42
		152.4	577.7	17.50	544.1	16.33	516.4	15.17	504.5	14.58	482.8	14.00	459.0	12.83
		190.2	577.7	17.50	544.1	16.33	516.4	14.58	504.5	14.58	482.8	14.00	459.0	12.83
	113	79.2	577.7	17.50	544.1	15.17	516.4	13.42	504.5	14.00	482.8	12.25	459.0	12.25
		152.4	577.7	15.75	544.1	14.58	516.4	14.00	504.5	12.83	482.8	12.83	459.0	11.08
		190.2	577.7	15.75	544.1	15.17	516.4	12.83	504.5	13.42	482.8	12.83	459.0	11.67

TC = Total Heating Capacity (MBh).
PI = Power input (KW).

Power input (KW) includes compressor(s) and controls.
Test condition based on 25 feet of equivalent refrigerant piping and no change in elevation between indoor unit and water source unit.

Due to our policy of continuous product innovation, some specifications may change without notification.
©LG Electronics U.S.A., Inc., Englewood Cliffs, NJ. All rights reserved. "LG" is a registered trademark of LG Corp.

PERFORMANCE DATA

Heating Capacity—ARWB580DA2 / ARWN580DA2 (460 Volt)

Table 30d: Heating Capacity ARWB580DA2 / ARWN580DA2

Combination Ratio (%) (Capacity index)	Inlet Water Temperature (°F)	Water Flow Rate (gpm)	Indoor Unit Entering Air Wet Bulb Temperature °F											
			61		65		68		70		72		75	
			TC	PI	TC	PI	TC	PI	TC	PI	TC	PI	TC	PI
			MBh	kW	MBh	kW	MBh	kW	MBh	kW	MBh	kW	MBh	kW
70	23	79.2	209.0	21.54	196.4	20.50	185.3	19.87	183.6	18.68	182.5	18.04	179.1	16.40
		152.4	236.6	23.38	222.3	22.25	209.7	21.56	207.8	20.27	206.5	19.58	202.7	17.80
		190.2	261.3	25.21	245.5	23.99	231.6	23.25	229.5	21.86	228.1	21.11	223.9	19.20
	32	79.2	363.3	30.98	336.1	29.48	312.1	28.57	306.6	26.86	301.9	25.94	291.0	23.59
		152.4	371.8	31.34	344.0	29.82	319.4	28.90	313.8	27.17	309.0	26.24	297.8	23.86
		190.2	377.5	31.34	349.2	29.82	324.3	28.90	318.6	27.17	313.7	26.24	302.3	23.86
	41	79.2	500.3	33.79	474.0	32.16	450.9	31.16	441.2	29.30	421.4	28.30	401.6	25.73
		152.4	504.5	34.48	477.6	32.81	451.1	31.80	441.2	29.90	421.4	28.88	401.6	26.25
		190.2	504.5	34.73	476.8	33.05	451.1	32.03	441.2	30.11	421.4	29.08	401.6	26.44
	50	79.2	502.4	30.89	475.4	29.20	451.0	28.12	441.2	26.61	421.4	25.52	401.6	23.36
		152.4	504.5	30.66	477.2	28.95	451.1	27.86	441.2	26.61	421.4	25.52	401.6	23.33
		190.2	504.5	30.78	476.8	29.07	451.1	27.97	441.2	26.72	421.4	25.33	401.6	23.43
	59	79.2	504.5	28.00	476.8	26.25	451.1	25.08	441.2	23.92	421.4	22.75	401.6	21.00
		152.4	504.5	26.83	476.8	25.08	451.1	23.92	441.2	23.33	421.4	22.17	401.6	20.42
		190.2	504.5	26.83	476.8	25.08	451.1	23.92	441.2	23.33	421.4	21.58	401.6	20.42
	68	79.2	504.5	23.33	476.8	22.17	451.1	21.58	441.2	21.00	421.4	19.83	401.6	18.67
		152.4	504.5	22.75	476.8	21.58	451.1	21.00	441.2	20.42	421.4	19.25	401.6	18.08
		190.2	504.5	22.75	476.8	21.58	451.1	21.00	441.2	19.83	421.4	19.25	401.6	17.50
	77	79.2	504.5	21.00	476.8	19.83	451.1	18.67	441.2	18.08	421.4	16.92	401.6	15.75
		152.4	504.5	20.42	476.8	19.25	451.1	18.08	441.2	17.50	421.4	16.92	401.6	15.75
		190.2	504.5	19.83	476.8	18.67	451.1	18.08	441.2	17.50	421.4	16.33	401.6	15.75
	86	79.2	504.5	18.67	476.8	17.50	451.1	16.33	441.2	15.75	421.4	15.17	401.6	14.00
		152.4	504.5	18.08	476.8	16.92	451.1	15.75	441.2	15.75	421.4	14.58	401.6	14.00
		190.2	504.5	18.08	476.8	16.92	451.1	15.75	441.2	15.17	421.4	14.58	401.6	14.00
	95	79.2	504.5	16.92	476.8	15.75	451.1	14.58	441.2	14.58	421.4	13.42	401.6	12.83
		152.4	504.5	16.33	476.8	15.17	451.1	14.58	441.2	14.00	421.4	13.42	401.6	12.25
		190.2	504.5	16.33	476.8	15.17	451.1	14.00	441.2	14.00	421.4	13.42	401.6	12.25
	104	79.2	504.5	15.75	476.8	14.58	451.1	13.42	441.2	12.83	421.4	12.25	401.6	11.67
		152.4	504.5	15.17	476.8	14.00	451.1	12.83	441.2	12.83	421.4	12.25	401.6	11.08
		190.2	504.5	15.17	476.8	14.00	451.1	12.83	441.2	12.25	421.4	11.67	401.6	11.08
	113	79.2	504.5	14.58	476.8	13.42	451.1	12.25	441.2	11.08	421.4	11.08	401.6	10.50
		152.4	504.5	14.00	476.8	12.83	451.1	11.08	441.2	11.67	421.4	11.08	401.6	9.92
		190.2	504.5	14.00	476.8	12.83	451.1	11.67	441.2	10.50	421.4	9.92	401.6	9.92
60	23	79.2	179.5	17.50	167.9	16.86	159.3	16.17	157.3	15.03	156.8	14.80	153.5	13.21
		152.4	203.2	18.99	190.0	18.29	180.2	17.55	178.0	16.31	177.4	16.06	173.7	14.34
		190.2	224.4	20.48	209.9	19.73	199.1	18.92	196.6	17.60	196.0	17.33	191.9	15.46
	32	79.2	312.0	25.17	287.3	24.24	268.3	23.25	262.6	21.62	259.4	21.29	249.4	19.00
		152.4	319.3	25.46	294.0	24.52	274.6	23.52	268.7	21.87	265.5	21.53	255.2	19.22
		190.2	324.2	25.46	298.5	24.52	278.7	23.52	272.8	21.87	269.5	21.53	259.1	19.22
	41	79.2	429.6	27.45	405.1	26.44	387.6	25.36	377.9	23.58	362.1	23.22	344.3	20.72
		152.4	433.3	28.01	408.2	26.98	387.8	25.88	377.9	24.06	362.1	23.69	344.3	21.15
		190.2	433.3	28.22	407.6	27.17	387.8	26.07	377.9	24.24	362.1	23.86	344.3	21.30
	50	79.2	431.5	25.10	406.4	24.01	387.7	22.89	377.9	21.42	362.1	20.94	344.3	18.82
		152.4	433.3	25.09	407.9	23.99	387.8	22.86	377.9	21.66	362.1	20.89	344.3	19.03
		190.2	433.3	25.19	407.6	23.80	387.8	22.66	377.9	21.45	362.1	20.68	344.3	18.82
	59	79.2	433.3	22.75	407.6	21.58	387.8	20.42	377.9	19.25	362.1	18.67	344.3	16.92
		152.4	433.3	22.17	407.6	21.00	387.8	19.83	377.9	19.25	362.1	18.08	344.3	16.92
		190.2	433.3	22.17	407.6	20.42	387.8	19.25	377.9	18.67	362.1	17.50	344.3	16.33
	68	79.2	433.3	19.83	407.6	18.67	387.8	17.50	377.9	16.92	362.1	16.33	344.3	15.17
		152.4	433.3	19.25	407.6	18.08	387.8	16.92	377.9	16.33	362.1	15.75	344.3	14.58
		190.2	433.3	19.25	407.6	18.08	387.8	16.92	377.9	16.33	362.1	15.75	344.3	14.58
	77	79.2	433.3	17.50	407.6	16.33	387.8	15.17	377.9	15.17	362.1	14.00	344.3	13.42
		152.4	433.3	16.92	407.6	15.75	387.8	15.17	377.9	14.58	362.1	14.00	344.3	12.83
		190.2	433.3	16.92	407.6	15.75	387.8	14.58	377.9	14.58	362.1	14.00	344.3	12.83
	86	79.2	433.3	15.75	407.6	14.58	387.8	14.00	377.9	13.42	362.1	12.83	344.3	12.25
		152.4	433.3	15.17	407.6	14.00	387.8	13.42	377.9	12.83	362.1	12.25	344.3	11.67
		190.2	433.3	15.17	407.6	14.00	387.8	13.42	377.9	12.83	362.1	12.25	344.3	11.67
	95	79.2	433.3	14.00	407.6	13.42	387.8	12.25	377.9	12.25	362.1	11.67	344.3	11.08
		152.4	433.3	14.00	407.6	12.83	387.8	12.25	377.9	11.67	362.1	11.08	344.3	10.50
		190.2	433.3	14.00	407.6	12.83	387.8	11.67	377.9	11.67	362.1	11.08	344.3	10.50
	104	79.2	433.3	12.83	407.6	12.25	387.8	11.08	377.9	11.08	362.1	10.50	344.3	9.92
		152.4	433.3	12.83	407.6	11.67	387.8	11.08	377.9	10.50	362.1	9.92	344.3	9.92
		190.2	433.3	12.83	407.6	11.67	387.8	11.08	377.9	10.50	362.1	9.92	344.3	9.92
	113	79.2	433.3	11.67	407.6	11.08	387.8	9.92	377.9	9.92	362.1	9.33	344.3	8.75
		152.4	433.3	11.67	407.6	10.50	387.8	9.92	377.9	9.33	362.1	8.75	344.3	9.33
		190.2	433.3	11.67	407.6	10.50	387.8	10.50	377.9	9.33	362.1	8.75	344.3	9.33

TC = Total Heating Capacity (MBh).
PI = Power input (KW).

Power input (KW) includes compressor(s) and controls.
Test condition based on 25 feet of equivalent refrigerant piping and no change in elevation between indoor unit and water source unit.

Due to our policy of continuous product innovation, some specifications may change without notification.
©LG Electronics U.S.A., Inc., Englewood Cliffs, NJ. All rights reserved. "LG" is a registered trademark of LG Corp.

PERFORMANCE DATA

Heating Capacity—ARWB580DA2 / ARWN580DA2 (460 Volt)

Table 30e: Heating Capacity ARWB580DA2 / ARWN580DA2

Combination Ratio (%) (Capacity index)	Inlet Water Temperature (°F)	Water Flow Rate (gpm)	Indoor Unit Entering Air Wet Bulb Temperature °F											
			61		65		68		70		72		75	
			TC	PI	TC	PI	TC	PI	TC	PI	TC	PI	TC	PI
			MBh	kW	MBh	kW	MBh	kW	MBh	kW	MBh	kW	MBh	kW
50	23	79.2	149.2	13.91	140.2	13.21	132.5	12.47	130.9	11.85	130.2	11.10	127.9	10.48
		152.4	168.8	15.10	158.6	14.34	149.9	13.54	148.1	12.85	147.3	12.05	144.8	11.37
		190.2	186.5	16.28	175.2	15.46	165.6	14.60	163.7	13.86	162.8	12.99	159.9	12.26
	32	79.2	259.3	20.01	239.9	19.00	223.1	17.94	218.6	17.03	215.5	15.97	207.8	15.07
		152.4	265.4	20.24	245.5	19.22	228.3	18.15	223.7	17.23	220.5	16.15	212.7	15.24
		190.2	269.4	20.24	249.3	19.22	231.8	18.15	227.1	17.23	223.9	16.15	215.9	15.24
	41	79.2	357.0	21.82	338.3	20.72	322.3	19.57	314.6	18.58	300.7	17.41	286.9	16.44
		152.4	360.1	22.27	340.8	21.15	322.5	19.96	314.6	18.96	300.7	17.77	286.9	16.77
		190.2	360.1	22.43	340.3	21.30	322.5	20.11	314.6	19.10	300.7	17.90	286.9	16.89
	50	79.2	358.6	19.95	339.3	18.82	322.4	17.66	314.6	16.87	300.7	15.71	286.9	14.93
		152.4	360.1	19.88	340.6	18.74	322.5	17.57	314.6	16.77	300.7	15.88	286.9	14.80
		190.2	360.1	19.96	340.3	18.82	322.5	17.64	314.6	16.84	300.7	15.66	286.9	14.86
	59	79.2	360.1	18.08	340.3	16.92	322.5	15.75	314.6	15.17	300.7	14.00	286.9	13.42
		152.4	360.1	17.50	340.3	16.33	322.5	15.17	314.6	14.58	300.7	14.00	286.9	12.83
		190.2	360.1	17.50	340.3	16.33	322.5	15.17	314.6	14.58	300.7	13.42	286.9	12.83
	68	79.2	360.1	15.75	340.3	14.58	322.5	14.00	314.6	13.42	300.7	12.83	286.9	11.67
		152.4	360.1	15.17	340.3	14.00	322.5	13.42	314.6	12.83	300.7	12.25	286.9	11.67
		190.2	360.1	15.17	340.3	14.00	322.5	13.42	314.6	12.83	300.7	12.25	286.9	11.67
	77	79.2	360.1	14.00	340.3	12.83	322.5	12.25	314.6	11.67	300.7	11.08	286.9	10.50
		152.4	360.1	13.42	340.3	12.83	322.5	11.67	314.6	11.67	300.7	11.08	286.9	10.50
		190.2	360.1	13.42	340.3	12.83	322.5	11.67	314.6	11.67	300.7	11.08	286.9	10.50
	86	79.2	360.1	12.83	340.3	11.67	322.5	11.08	314.6	10.50	300.7	10.50	286.9	9.92
		152.4	360.1	12.25	340.3	11.08	322.5	10.50	314.6	10.50	300.7	9.92	286.9	9.33
		190.2	360.1	12.25	340.3	11.08	322.5	10.50	314.6	10.50	300.7	9.92	286.9	9.33
	95	79.2	360.1	11.67	340.3	10.50	322.5	9.92	314.6	9.92	300.7	9.33	286.9	8.75
		152.4	360.1	11.08	340.3	10.50	322.5	9.92	314.6	9.33	300.7	9.33	286.9	8.75
		190.2	360.1	11.08	340.3	10.50	322.5	9.92	314.6	9.33	300.7	9.33	286.9	8.75
	104	79.2	360.1	10.50	340.3	9.92	322.5	9.33	314.6	8.75	300.7	8.75	286.9	8.17
		152.4	360.1	9.92	340.3	9.33	322.5	8.75	314.6	8.75	300.7	8.17	286.9	8.17
		190.2	360.1	9.92	340.3	9.33	322.5	8.75	314.6	8.75	300.7	8.17	286.9	8.17
	113	79.2	360.1	9.33	340.3	9.33	322.5	8.75	314.6	7.58	300.7	8.17	286.9	7.58
		152.4	360.1	8.75	340.3	8.17	322.5	7.58	314.6	8.17	300.7	7.00	286.9	7.58
		190.2	360.1	8.75	340.3	8.17	322.5	7.58	314.6	8.17	300.7	7.00	286.9	7.58

TC = Total Heating Capacity (MBh).
PI = Power input (KW).
Power input (KW) includes compressor(s) and controls.
Test condition based on 25 feet of equivalent refrigerant piping and no change in elevation between indoor unit and water source unit.

Due to our policy of continuous product innovation, some specifications may change without notification.
©LG Electronics U.S.A., Inc., Englewood Cliffs, NJ. All rights reserved. "LG" is a registered trademark of LG Corp.

PERFORMANCE DATA

Heating Capacity—ARWB072BA2 / ARWN072BA2 (208/230 Volt)

Table 31a: Heating Capacity ARWB072BA2 / ARWN072BA2

Combination Ratio (%) (Capacity index)	Inlet Water Temperature (°F)	Water Flow Rate (gpm)	Indoor Unit Entering Air Wet Bulb Temperature °F											
			61		65		68		70		72		75	
			TC MBh	PI kW	TC MBh	PI kW	TC MBh	PI kW	TC MBh	PI kW	TC MBh	PI kW	TC MBh	PI kW
130	23	10.6	39.6	4.85	39.3	4.57	39.1	4.26	38.6	4.15	39.0	4.03	38.0	3.61
		21.1	44.9	5.18	44.5	4.92	44.2	4.63	43.6	4.50	44.2	4.37	43.0	3.92
		26.4	49.5	5.51	49.1	5.26	48.9	4.99	48.2	4.85	48.8	4.72	47.5	4.23
	32	10.6	68.9	6.54	67.3	6.34	65.8	6.13	64.4	5.96	64.6	5.79	61.7	5.20
		21.1	70.5	6.60	68.8	6.40	67.4	6.20	65.9	6.03	66.1	5.86	63.2	5.26
		26.4	71.6	6.60	69.9	6.40	68.4	6.20	66.9	6.03	67.1	5.86	64.1	5.26
	41	10.6	98.9	7.04	97.3	6.86	95.1	6.69	92.7	6.50	90.2	6.32	85.2	5.67
		21.1	100.3	7.16	98.0	6.99	95.2	6.83	92.7	6.64	90.2	6.45	85.2	5.78
		26.4	100.9	7.21	98.3	7.04	95.2	6.87	92.7	6.68	90.2	6.50	85.2	5.82
	50	10.6	99.3	6.36	97.6	6.17	95.1	6.06	92.7	5.91	90.2	5.70	85.2	5.15
		21.1	101.6	6.31	99.4	6.19	96.7	6.10	94.2	5.90	91.6	5.69	86.6	5.13
		26.4	102.2	6.40	100.0	6.27	97.3	6.13	94.7	5.92	92.2	5.78	87.1	5.38
	59	10.6	99.7	5.69	97.8	5.48	95.2	5.43	92.7	5.31	90.2	5.08	85.2	4.63
		21.1	102.9	5.46	100.8	5.38	98.1	5.38	95.7	5.16	92.9	4.93	88.0	4.47
		26.4	103.4	5.60	101.8	5.51	99.4	5.38	96.7	5.16	94.2	5.07	89.0	4.93
	68	10.6	103.4	5.23	101.6	5.02	98.9	4.91	96.2	4.78	93.4	4.69	88.0	4.47
		21.1	106.7	5.08	104.8	5.01	101.9	4.90	99.1	4.85	96.7	4.81	91.2	4.32
		26.4	107.2	5.08	105.5	5.01	103.1	4.93	100.1	4.85	97.4	4.81	91.9	4.60
	77	10.6	108.3	5.01	105.6	4.87	103.1	4.78	101.1	4.70	98.9	4.63	93.2	4.32
		21.1	108.3	4.93	105.6	4.84	103.1	4.70	101.1	4.63	98.9	4.55	93.2	4.25
		26.4	108.3	4.85	105.6	4.72	103.1	4.63	101.1	4.55	98.9	4.47	93.2	4.17
	86	10.6	108.3	4.85	105.6	4.64	103.1	4.58	101.1	4.47	98.9	4.40	93.2	4.10
		21.1	108.3	4.70	105.6	4.61	103.1	4.47	101.1	4.40	98.9	4.25	93.2	3.94
		26.4	108.3	4.63	105.6	4.49	103.1	4.40	101.1	4.32	98.9	4.25	93.2	3.94
	95	10.6	108.3	4.63	105.6	4.49	103.1	4.40	101.1	4.25	98.9	4.10	93.2	3.79
		21.1	108.3	4.47	105.6	4.38	103.1	4.32	101.1	4.17	98.9	4.02	93.2	3.64
		26.4	108.3	4.47	105.6	4.34	103.1	4.25	101.1	4.10	98.9	3.94	93.2	3.64
	104	10.6	108.3	4.47	105.6	4.34	103.1	4.25	101.1	4.10	98.9	3.94	93.2	3.56
		21.1	108.3	4.32	105.6	4.23	103.1	4.10	101.1	3.94	98.9	3.79	93.2	3.41
		26.4	108.3	4.25	105.6	4.16	103.1	4.10	101.1	3.94	98.9	3.79	93.2	3.41
	113	10.6	108.3	4.32	105.6	4.19	103.1	4.09	101.1	3.94	98.9	3.79	93.2	3.34
		21.1	108.3	4.17	105.6	4.08	103.1	3.87	101.1	3.72	98.9	3.56	93.2	3.19
		26.4	108.3	4.02	105.6	3.97	103.1	3.94	101.1	3.79	98.9	3.64	93.2	3.19
120	23	10.6	37.7	4.85	37.4	4.57	37.1	4.26	36.7	4.09	37.0	3.97	36.0	3.55
		21.1	42.6	5.18	42.3	4.92	42.0	4.63	41.5	4.43	41.9	4.31	40.7	3.86
		26.4	47.1	5.51	46.7	5.26	46.4	4.99	45.9	4.78	46.3	4.65	45.0	4.16
	32	10.6	65.5	6.54	63.9	6.34	62.6	6.13	61.3	5.88	61.2	5.71	58.5	5.11
		21.1	67.0	6.60	65.4	6.40	64.0	6.20	62.7	5.94	62.7	5.77	59.9	5.17
		26.4	68.0	6.60	66.4	6.40	65.0	6.20	63.7	5.94	63.6	5.77	60.8	5.17
	41	10.6	94.2	7.04	92.6	6.86	90.4	6.69	88.2	6.41	85.5	6.23	80.8	5.57
		21.1	95.5	7.16	93.3	6.99	90.4	6.83	88.2	6.54	85.5	6.35	80.8	5.69
		26.4	96.1	7.21	92.7	7.04	90.4	6.87	88.2	6.59	85.5	6.40	80.8	5.73
	50	10.6	94.6	6.32	92.8	6.15	90.4	6.01	88.2	5.82	85.5	5.62	80.8	5.06
		21.1	96.4	6.40	94.3	6.23	91.4	6.10	89.2	5.85	86.3	5.60	81.6	5.08
		26.4	96.9	6.38	94.0	6.23	91.8	6.13	89.6	5.87	86.7	5.63	82.0	5.25
	59	10.6	95.0	5.60	93.1	5.43	90.4	5.34	88.2	5.23	85.5	5.01	80.8	4.55
		21.1	97.2	5.64	95.4	5.48	92.4	5.38	90.2	5.16	87.2	4.85	82.5	4.47
		26.4	97.7	5.55	95.3	5.43	93.2	5.38	90.9	5.16	88.0	4.85	83.2	4.78
	68	10.6	97.7	5.02	95.9	4.82	92.9	4.70	90.4	4.63	87.5	4.55	82.7	4.31
		21.1	100.2	5.02	98.1	4.90	94.9	4.78	92.7	4.70	89.7	4.53	84.7	4.25
		26.4	100.7	4.97	98.0	4.85	95.7	4.78	93.2	4.70	90.2	4.55	85.2	4.40
	77	10.6	101.9	4.73	98.9	4.52	95.7	4.43	93.7	4.32	91.2	4.25	86.2	3.94
		21.1	102.1	4.66	98.9	4.49	95.7	4.40	93.7	4.25	91.2	4.17	86.2	3.87
		26.4	102.4	4.49	98.9	4.37	95.7	4.32	93.7	4.25	91.2	4.10	86.2	3.87
	86	10.6	102.4	4.50	98.9	4.29	95.7	4.17	93.7	4.02	91.2	3.94	86.2	3.64
		21.1	102.4	4.35	98.9	4.19	95.7	4.10	93.7	3.94	91.2	3.79	86.2	3.56
		26.4	102.4	4.22	98.9	4.10	95.7	4.02	93.7	3.94	91.2	3.79	86.2	3.49
	95	10.6	102.4	4.28	98.9	4.06	95.7	3.94	93.7	3.79	91.2	3.64	86.2	3.34
		21.1	102.4	4.03	98.9	3.91	95.7	3.79	93.7	3.64	91.2	3.49	86.2	3.26
		26.4	102.4	3.99	98.9	3.88	95.7	3.79	93.7	3.64	91.2	3.49	86.2	3.19
	104	10.6	102.4	4.13	98.9	3.87	95.7	3.72	93.7	3.56	91.2	3.41	86.2	3.11
		21.1	102.4	3.81	98.9	3.69	95.7	3.56	93.7	3.41	91.2	3.26	86.2	3.03
		26.4	102.4	3.76	98.9	3.64	95.7	3.56	93.7	3.41	91.2	3.26	86.2	2.96
	113	10.6	102.4	3.97	98.9	3.67	95.7	3.49	93.7	3.34	91.2	3.19	86.2	2.88
		21.1	102.4	3.58	98.9	3.46	95.7	3.34	93.7	3.19	91.2	3.03	86.2	2.81
		26.4	102.4	3.53	98.9	3.40	95.7	3.34	93.7	3.19	91.2	3.03	86.2	2.73

TC = Total Heating Capacity (MBh).
PI = Power input (KW).

Power input (KW) includes compressor(s) and controls.
Test condition based on 25 feet of equivalent refrigerant piping and no change in elevation between indoor unit and water source unit.

Due to our policy of continuous product innovation, some specifications may change without notification.
©LG Electronics U.S.A., Inc., Englewood Cliffs, NJ. All rights reserved. "LG" is a registered trademark of LG Corp.

Table 31b: Heating Capacity ARWB072BA2 / ARWN072BA2

Combination Ratio (%) (Capacity index)	Inlet Water Temperature (°F)	Water Flow Rate (gpm)	Indoor Unit Entering Air Wet Bulb Temperature °F											
			61		65		68		70		72		75	
			TC MBh	PI kW	TC MBh	PI kW	TC MBh	PI kW	TC MBh	PI kW	TC MBh	PI kW	TC MBh	PI kW
110	23	10.6	35.6	4.91	35.4	4.57	35.2	4.26	34.8	4.09	34.9	3.97	34.1	3.55
		21.1	40.3	5.24	40.1	4.92	39.8	4.63	39.4	4.43	39.4	4.31	38.6	3.86
		26.4	44.5	5.58	44.3	5.26	44.0	4.99	43.6	4.78	43.6	4.65	42.7	4.16
	32	10.6	61.9	6.62	60.6	6.34	59.3	6.13	58.2	5.88	57.7	5.71	55.4	5.11
		21.1	63.4	6.69	62.0	6.40	60.7	6.20	59.5	5.94	59.0	5.77	56.7	5.17
		26.4	64.3	6.69	63.0	6.40	61.6	6.20	60.5	5.94	59.9	5.77	57.6	5.17
	41	10.6	90.1	7.13	87.9	6.86	85.7	6.69	83.7	6.41	80.5	6.23	76.5	5.57
		21.1	91.4	7.26	88.5	6.99	85.7	6.83	83.7	6.54	80.5	6.35	76.5	5.69
		26.4	91.9	7.30	88.8	7.04	85.7	6.87	83.7	6.59	80.5	6.40	76.5	5.73
	50	10.6	90.5	6.38	88.1	6.17	85.7	6.04	83.7	5.82	80.5	5.62	76.5	5.06
		21.1	91.8	6.43	89.1	6.23	86.2	6.10	84.2	5.85	81.0	5.60	76.9	5.08
		26.4	92.3	6.43	89.5	6.23	86.5	6.09	84.4	5.83	81.1	5.63	77.1	5.14
	59	10.6	90.8	5.63	88.4	5.48	85.7	5.38	83.7	5.23	80.5	5.01	76.5	4.55
		21.1	92.3	5.60	89.6	5.48	86.7	5.38	84.7	5.16	81.5	4.85	77.3	4.47
		26.4	92.8	5.55	90.1	5.43	87.2	5.31	85.0	5.08	81.7	4.85	77.8	4.55
	68	10.6	92.6	4.87	89.9	4.75	87.0	4.63	84.7	4.55	81.5	4.40	77.3	4.13
		21.1	94.6	4.91	91.1	4.75	88.0	4.63	86.0	4.55	82.5	4.32	78.5	4.10
		26.4	95.1	4.91	91.9	4.75	88.5	4.63	86.2	4.47	83.0	4.32	78.8	4.10
	77	10.6	95.2	4.41	92.2	4.25	88.5	4.17	86.5	4.02	83.5	3.87	79.0	3.56
		21.1	95.9	4.38	92.2	4.17	88.5	4.10	86.5	3.94	83.5	3.79	79.0	3.56
		26.4	96.4	4.38	92.2	4.19	88.5	4.02	86.5	3.94	83.5	3.72	79.0	3.49
	86	10.6	96.4	4.02	92.2	3.87	88.5	3.72	86.5	3.64	83.5	3.41	79.0	3.19
		21.1	96.4	3.94	92.2	3.79	88.5	3.64	86.5	3.56	83.5	3.34	79.0	3.11
		26.4	96.4	3.91	92.2	3.72	88.5	3.56	86.5	3.49	83.5	3.34	79.0	3.11
	95	10.6	96.4	3.79	92.2	3.56	88.5	3.41	86.5	3.26	83.5	3.11	79.0	2.88
		21.1	96.4	3.64	92.2	3.49	88.5	3.34	86.5	3.19	83.5	3.03	79.0	2.81
		26.4	96.4	3.55	92.2	3.41	88.5	3.26	86.5	3.19	83.5	3.03	79.0	2.81
	104	10.6	96.4	3.56	92.2	3.41	88.5	3.19	86.5	3.03	83.5	2.88	79.0	2.65
		21.1	96.4	3.41	92.2	3.26	88.5	3.03	86.5	2.96	83.5	2.81	79.0	2.58
		26.4	96.4	3.37	92.2	3.19	88.5	3.03	86.5	2.88	83.5	2.73	79.0	2.50
	113	10.6	96.4	3.34	92.2	3.26	88.5	2.96	86.5	2.81	83.5	2.65	79.0	2.43
		21.1	96.4	3.19	92.2	3.03	88.5	2.73	86.5	2.73	83.5	2.58	79.0	2.35
		26.4	96.4	3.19	92.2	2.96	88.5	2.81	86.5	2.58	83.5	2.43	79.0	2.20
100	23	10.6	33.7	4.91	33.5	4.63	33.3	4.26	33.0	4.09	32.7	3.91	32.1	3.55
		21.1	38.1	5.24	37.9	4.98	37.6	4.63	37.3	4.43	37.0	4.24	36.4	3.86
		26.4	42.1	5.58	41.8	5.33	41.6	4.99	41.2	4.78	40.9	4.57	40.2	4.16
	32	10.6	58.5	6.62	57.3	6.42	56.0	6.13	55.1	5.88	54.1	5.62	52.2	5.11
		21.1	59.9	6.69	58.6	6.49	57.3	6.20	56.4	5.94	55.4	5.69	53.4	5.17
		26.4	60.8	6.69	59.5	6.49	58.2	6.20	57.2	5.94	56.2	5.69	54.2	5.17
	41	10.6	86.2	7.13	83.2	6.96	81.0	6.69	79.3	6.41	75.5	6.13	72.1	5.57
		21.1	87.4	7.26	83.8	7.09	81.0	6.83	79.3	6.54	75.5	6.26	72.1	5.69
		26.4	87.9	7.30	84.1	7.13	81.0	6.87	79.3	6.59	75.5	6.30	72.1	5.73
	50	10.6	86.6	6.38	83.4	6.23	81.0	6.04	79.3	5.82	75.5	5.53	72.1	5.06
		21.1	87.4	6.50	83.9	6.30	81.0	6.10	79.3	5.85	75.5	5.55	72.1	5.08
		26.4	88.0	6.47	84.2	6.30	81.0	6.09	79.3	5.83	75.5	5.54	72.1	5.06
	59	10.6	86.9	5.63	83.7	5.51	81.0	5.38	79.3	5.23	75.5	4.93	72.1	4.55
		21.1	87.4	5.73	83.9	5.52	81.0	5.38	79.3	5.16	75.5	4.85	72.1	4.47
		26.4	88.2	5.64	84.4	5.48	81.0	5.31	79.3	5.08	75.5	4.78	72.1	4.40
	68	10.6	87.7	4.81	84.2	4.67	81.0	4.55	79.3	4.47	75.5	4.17	72.1	3.94
		21.1	88.9	4.90	84.4	4.69	81.0	4.55	79.3	4.40	75.5	4.10	72.1	3.79
		26.4	89.4	4.81	85.2	4.64	81.0	4.47	79.3	4.32	75.5	4.02	72.1	3.72
	77	10.6	88.7	4.19	85.5	4.03	81.0	3.87	79.3	3.72	75.5	3.49	72.1	3.19
		21.1	89.9	4.20	85.5	3.94	81.0	3.79	79.3	3.64	75.5	3.41	72.1	3.19
		26.4	90.4	4.11	85.5	3.91	81.0	3.72	79.3	3.56	75.5	3.41	72.1	3.11
	86	10.6	90.4	3.79	85.5	3.49	81.0	3.26	79.3	3.19	75.5	2.96	72.1	2.81
		21.1	90.4	3.72	85.5	3.41	81.0	3.23	79.3	3.11	75.5	2.96	72.1	2.73
		26.4	90.4	3.64	85.5	3.41	81.0	3.19	79.3	3.11	75.5	2.88	72.1	2.73
	95	10.6	90.4	3.49	85.5	3.19	81.0	2.88	79.3	2.81	75.5	2.65	72.1	2.43
		21.1	90.4	3.34	85.5	3.03	81.0	2.85	79.3	2.73	75.5	2.58	72.1	2.35
		26.4	90.4	3.34	85.5	3.03	81.0	2.81	79.3	2.73	75.5	2.58	72.1	2.35
	104	10.6	90.4	3.26	85.5	2.96	81.0	2.58	79.3	2.50	75.5	2.35	72.1	2.20
		21.1	90.4	3.11	85.5	2.81	81.0	2.55	79.3	2.43	75.5	2.28	72.1	2.12
		26.4	90.4	3.03	85.5	2.81	81.0	2.50	79.3	2.43	75.5	2.28	72.1	2.12
	113	10.6	90.4	3.03	85.5	2.73	81.0	2.28	79.3	2.20	75.5	2.05	72.1	1.97
		21.1	90.4	2.88	85.5	2.58	81.0	2.24	79.3	2.12	75.5	1.97	72.1	1.90
		26.4	90.4	2.73	85.5	2.58	81.0	2.20	79.3	2.12	75.5	1.97	72.1	1.90

TC = Total Heating Capacity (MBh).
PI = Power input (KW).

Power input (KW) includes compressor(s) and controls.
Test condition based on 25 feet of equivalent refrigerant piping and no change in elevation between indoor unit and water source unit.

LG

Due to our policy of continuous product innovation, some specifications may change without notification.
©LG Electronics U.S.A., Inc., Englewood Cliffs, NJ. All rights reserved. "LG" is a registered trademark of LG Corp.

PERFORMANCE DATA

Heating Capacity—ARWB072BA2 / ARWN072BA2 (208/230 Volt)

Table 31c: Heating Capacity ARWB072BA2 / ARWN072BA2

Combination Ratio (%) (Capacity index)	Inlet Water Temperature (°F)	Water Flow Rate (gpm)	Indoor Unit Entering Air Wet Bulb Temperature °F											
			61		65		68		70		72		75	
			TC MBh	PI kW	TC MBh	PI kW	TC MBh	PI kW	TC MBh	PI kW	TC MBh	PI kW	TC MBh	PI kW
90	23	10.6	31.8	4.56	30.8	4.16	29.9	3.66	29.7	3.49	29.5	3.37	28.9	3.02
		21.1	36.0	4.86	34.9	4.47	33.8	3.98	33.6	3.79	33.4	3.65	32.7	3.28
		26.4	39.8	5.17	38.5	4.77	37.4	4.29	37.1	4.09	36.8	3.94	36.2	3.54
	32	10.6	55.3	6.12	52.7	5.74	50.4	5.27	49.6	5.03	48.8	4.84	47.0	4.34
		21.1	56.6	6.18	54.0	5.80	51.5	5.33	50.7	5.08	49.9	4.90	48.1	4.39
		26.4	57.4	6.18	54.8	5.80	52.3	5.33	51.5	5.08	50.7	4.90	48.8	4.39
	41	10.6	77.7	6.58	75.1	6.21	72.8	5.75	71.3	5.48	68.1	5.28	64.8	4.74
		21.1	78.1	6.70	74.9	6.33	72.8	5.86	71.3	5.59	68.1	5.39	64.8	4.83
		26.4	78.5	6.74	75.1	6.37	72.8	5.91	71.3	5.63	68.1	5.43	64.8	4.87
	50	10.6	78.1	5.79	75.4	5.51	72.8	5.19	71.3	4.98	68.1	4.76	64.8	4.30
		21.1	77.9	5.81	75.0	5.53	72.8	5.21	71.3	5.00	68.1	4.74	64.8	4.31
		26.4	78.4	5.79	75.2	5.51	72.8	5.19	71.3	4.98	68.1	4.76	64.8	4.33
	59	10.6	78.4	4.99	75.6	4.81	72.8	4.63	71.3	4.47	68.1	4.25	64.8	3.87
		21.1	77.8	4.91	75.0	4.73	72.8	4.55	71.3	4.40	68.1	4.10	64.8	3.79
		26.4	78.3	4.84	75.3	4.66	72.8	4.47	71.3	4.32	68.1	4.10	64.8	3.79
	68	10.6	78.9	4.23	75.8	4.10	72.8	3.94	71.3	3.79	68.1	3.64	64.8	3.41
		21.1	78.6	4.23	75.3	4.05	72.8	3.87	71.3	3.72	68.1	3.49	64.8	3.26
		26.4	78.8	4.16	75.5	4.02	72.8	3.87	71.3	3.72	68.1	3.49	64.8	3.26
	77	10.6	80.5	3.69	77.0	3.49	72.8	3.34	71.3	3.19	68.1	3.03	64.8	2.81
		21.1	81.2	3.66	77.0	3.46	72.8	3.26	71.3	3.19	68.1	2.96	64.8	2.73
		26.4	81.5	3.56	77.0	3.38	72.8	3.26	71.3	3.11	68.1	2.96	64.8	2.73
	86	10.6	81.5	3.34	77.0	3.11	72.8	2.88	71.3	2.81	68.1	2.65	64.8	2.43
		21.1	81.5	3.26	77.0	3.03	72.8	2.81	71.3	2.73	68.1	2.58	64.8	2.43
		26.4	81.5	3.19	77.0	2.96	72.8	2.81	71.3	2.73	68.1	2.58	64.8	2.35
	95	10.6	81.5	3.03	77.0	2.81	72.8	2.58	71.3	2.50	68.1	2.35	64.8	2.20
		21.1	81.5	2.96	77.0	2.73	72.8	2.50	71.3	2.43	68.1	2.28	64.8	2.12
		26.4	81.5	2.88	77.0	2.65	72.8	2.43	71.3	2.35	68.1	2.28	64.8	2.12
	104	10.6	81.5	2.81	77.0	2.58	72.8	2.28	71.3	2.20	68.1	2.12	64.8	1.97
		21.1	81.5	2.65	77.0	2.50	72.8	2.20	71.3	2.12	68.1	2.05	64.8	1.90
		26.4	81.5	2.65	77.0	2.50	72.8	2.20	71.3	2.12	68.1	2.05	64.8	1.90
	113	10.6	81.5	2.58	77.0	2.35	72.8	1.97	71.3	1.90	68.1	1.90	64.8	1.74
		21.1	81.5	2.35	77.0	2.28	72.8	1.90	71.3	1.82	68.1	1.82	64.8	1.67
		26.4	81.5	2.43	77.0	2.35	72.8	1.97	71.3	1.90	68.1	1.82	64.8	1.67
80	23	10.6	30.1	3.27	28.1	3.14	26.6	3.00	26.4	2.90	26.2	2.77	25.7	2.55
		21.1	34.0	3.55	31.8	3.41	30.1	3.26	29.8	3.15	29.7	3.00	29.1	2.76
		26.4	37.6	3.82	35.2	3.67	33.3	3.51	33.0	3.40	32.8	3.24	32.1	2.98
	32	10.6	52.2	4.70	48.2	4.51	44.9	4.32	44.0	4.17	43.4	3.98	41.8	3.66
		21.1	53.5	4.75	49.3	4.57	45.9	4.37	45.1	4.22	44.5	4.02	42.7	3.70
		26.4	54.3	4.75	50.0	4.57	46.6	4.37	45.7	4.22	45.1	4.02	43.4	3.70
	41	10.6	71.9	5.12	67.9	4.92	64.8	4.71	63.4	4.55	60.6	4.34	57.6	3.99
		21.1	72.6	5.23	68.4	5.02	64.8	4.81	63.4	4.64	60.6	4.43	57.6	4.08
		26.4	72.6	5.27	68.3	5.06	64.8	4.84	63.4	4.68	60.6	4.46	57.6	4.11
	50	10.6	72.2	4.69	68.1	4.47	64.8	4.25	63.4	4.13	60.6	3.91	57.6	3.63
		21.1	72.6	4.66	68.4	4.45	64.8	4.26	63.4	4.14	60.6	3.92	57.6	3.63
		26.4	72.6	4.64	68.3	4.46	64.8	4.28	63.4	4.12	60.6	3.90	57.6	3.61
	59	10.6	72.6	4.25	68.3	4.02	64.8	3.79	63.4	3.72	60.6	3.49	57.6	3.26
		21.1	72.6	4.10	68.3	3.87	64.8	3.72	63.4	3.64	60.6	3.41	57.6	3.19
		26.4	72.6	4.02	68.3	3.87	64.8	3.72	63.4	3.56	60.6	3.34	57.6	3.11
	68	10.6	72.6	3.56	68.3	3.41	64.8	3.26	63.4	3.19	60.6	3.03	57.6	2.81
		21.1	72.6	3.49	68.3	3.34	64.8	3.26	63.4	3.11	60.6	2.96	57.6	2.73
		26.4	72.6	3.41	68.3	3.26	64.8	3.19	63.4	3.11	60.6	2.88	57.6	2.73
	77	10.6	72.6	3.19	68.3	2.96	64.8	2.81	63.4	2.73	60.6	2.58	57.6	2.43
		21.1	72.6	3.11	68.3	2.88	64.8	2.81	63.4	2.65	60.6	2.50	57.6	2.35
		26.4	72.6	3.03	68.3	2.88	64.8	2.73	63.4	2.65	60.6	2.50	57.6	2.35
	86	10.6	72.6	2.81	68.3	2.65	64.8	2.50	63.4	2.43	60.6	2.28	57.6	2.12
		21.1	72.6	2.73	68.3	2.58	64.8	2.43	63.4	2.35	60.6	2.20	57.6	2.05
		26.4	72.6	2.73	68.3	2.58	64.8	2.43	63.4	2.35	60.6	2.20	57.6	2.05
	95	10.6	72.6	2.58	68.3	2.43	64.8	2.20	63.4	2.12	60.6	2.05	57.6	1.90
		21.1	72.6	2.50	68.3	2.35	64.8	2.12	63.4	2.12	60.6	1.97	57.6	1.90
		26.4	72.6	2.50	68.3	2.28	64.8	2.12	63.4	2.05	60.6	1.97	57.6	1.82
	104	10.6	72.6	2.43	68.3	2.20	64.8	1.97	63.4	1.97	60.6	1.82	57.6	1.74
		21.1	72.6	2.28	68.3	2.12	64.8	1.97	63.4	1.90	60.6	1.82	57.6	1.67
		26.4	72.6	2.28	68.3	2.12	64.8	1.90	63.4	1.90	60.6	1.82	57.6	1.67
	113	10.6	72.6	2.27	68.3	1.97	64.8	1.74	63.4	1.82	60.6	1.59	57.6	1.59
		21.1	72.6	2.05	68.3	1.90	64.8	1.82	63.4	1.67	60.6	1.67	57.6	1.44
		26.4	72.6	2.05	68.3	1.97	64.8	1.67	63.4	1.74	60.6	1.67	57.6	1.52

TC = Total Heating Capacity (MBh).
PI = Power input (KW).

Power input (KW) includes compressor(s) and controls.
Test condition based on 25 feet of equivalent refrigerant piping and no change in elevation between indoor unit and water source unit.

Due to our policy of continuous product innovation, some specifications may change without notification.
©LG Electronics U.S.A., Inc., Englewood Cliffs, NJ. All rights reserved. "LG" is a registered trademark of LG Corp.

PERFORMANCE DATA

Heating Capacity—ARWB072BA2 / ARWN072BA2 (208/230 Volt)

Table 31d: Heating Capacity ARWB072BA2 / ARWN072BA2

Combination Ratio (%) (Capacity index)	Inlet Water Temperature (°F)	Water Flow Rate (gpm)	Indoor Unit Entering Air Wet Bulb Temperature °F											
			61		65		68		70		72		75	
			TC MBh	PI kW	TC MBh	PI kW	TC MBh	PI kW	TC MBh	PI kW	TC MBh	PI kW	TC MBh	PI kW
70	23	10.6	26.3	2.80	24.7	2.67	23.3	2.58	23.1	2.43	22.9	2.35	22.5	2.13
		21.1	29.7	3.04	27.9	2.89	26.3	2.80	26.1	2.64	25.9	2.55	25.5	2.31
		26.4	32.8	3.28	30.8	3.12	29.1	3.02	28.8	2.84	28.6	2.74	28.1	2.50
	32	10.6	45.6	4.03	42.2	3.83	39.2	3.71	38.5	3.49	37.9	3.37	36.5	3.07
		21.1	46.7	4.07	43.2	3.88	40.1	3.76	39.4	3.53	38.8	3.41	37.4	3.10
		26.4	47.4	4.07	43.9	3.88	40.7	3.76	40.0	3.53	39.4	3.41	38.0	3.10
	41	10.6	62.8	4.39	59.5	4.18	56.6	4.05	55.4	3.81	52.9	3.68	50.4	3.34
		21.1	63.4	4.48	60.0	4.27	56.7	4.13	55.4	3.89	52.9	3.75	50.4	3.41
		26.4	63.4	4.51	59.9	4.30	56.7	4.16	55.4	3.91	52.9	3.78	50.4	3.44
	50	10.6	63.1	4.02	59.7	3.80	56.6	3.66	55.4	3.46	52.9	3.32	50.4	3.04
		21.1	63.4	3.99	59.9	3.76	56.7	3.62	55.4	3.46	52.9	3.32	50.4	3.03
		26.4	63.4	4.00	59.9	3.78	56.7	3.64	55.4	3.47	52.9	3.29	50.4	3.05
	59	10.6	63.4	3.64	59.9	3.41	56.7	3.26	55.4	3.11	52.9	2.96	50.4	2.73
		21.1	63.4	3.49	59.9	3.26	56.7	3.11	55.4	3.03	52.9	2.88	50.4	2.65
		26.4	63.4	3.49	59.9	3.26	56.7	3.11	55.4	3.03	52.9	2.81	50.4	2.65
	68	10.6	63.4	3.03	59.9	2.88	56.7	2.81	55.4	2.73	52.9	2.58	50.4	2.43
		21.1	63.4	2.96	59.9	2.81	56.7	2.73	55.4	2.65	52.9	2.50	50.4	2.35
		26.4	63.4	2.96	59.9	2.81	56.7	2.73	55.4	2.58	52.9	2.50	50.4	2.28
	77	10.6	63.4	2.73	59.9	2.58	56.7	2.43	55.4	2.35	52.9	2.20	50.4	2.05
		21.1	63.4	2.65	59.9	2.50	56.7	2.35	55.4	2.28	52.9	2.20	50.4	2.05
		26.4	63.4	2.58	59.9	2.43	56.7	2.35	55.4	2.28	52.9	2.12	50.4	2.05
	86	10.6	63.4	2.43	59.9	2.28	56.7	2.12	55.4	2.05	52.9	1.97	50.4	1.82
		21.1	63.4	2.35	59.9	2.20	56.7	2.05	55.4	2.05	52.9	1.90	50.4	1.82
		26.4	63.4	2.35	59.9	2.20	56.7	2.05	55.4	1.97	52.9	1.90	50.4	1.82
	95	10.6	63.4	2.20	59.9	2.05	56.7	1.90	55.4	1.90	52.9	1.74	50.4	1.67
		21.1	63.4	2.12	59.9	1.97	56.7	1.90	55.4	1.82	52.9	1.74	50.4	1.59
		26.4	63.4	2.12	59.9	1.97	56.7	1.82	55.4	1.82	52.9	1.74	50.4	1.59
	104	10.6	63.4	2.05	59.9	1.90	56.7	1.74	55.4	1.67	52.9	1.59	50.4	1.52
		21.1	63.4	1.97	59.9	1.82	56.7	1.67	55.4	1.67	52.9	1.59	50.4	1.44
		26.4	63.4	1.97	59.9	1.82	56.7	1.67	55.4	1.59	52.9	1.52	50.4	1.44
	113	10.6	63.4	1.90	59.9	1.74	56.7	1.59	55.4	1.44	52.9	1.44	50.4	1.36
		21.1	63.4	1.82	59.9	1.67	56.7	1.44	55.4	1.52	52.9	1.44	50.4	1.29
		26.4	63.4	1.82	59.9	1.67	56.7	1.52	55.4	1.37	52.9	1.29	50.4	1.29
60	23	10.6	22.5	2.28	21.1	2.19	20.0	2.10	19.8	1.95	19.7	1.92	19.3	1.72
		21.1	25.5	2.47	23.9	2.38	22.6	2.28	22.3	2.12	22.3	2.09	21.8	1.86
		26.4	28.2	2.66	26.4	2.56	25.0	2.46	24.7	2.29	24.6	2.25	24.1	2.01
	32	10.6	39.2	3.27	36.1	3.15	33.7	3.02	33.0	2.81	32.6	2.77	31.3	2.47
		21.1	40.1	3.31	36.9	3.19	34.5	3.06	33.7	2.84	33.3	2.80	32.1	2.50
		26.4	40.7	3.31	37.5	3.19	35.0	3.06	34.3	2.84	33.8	2.80	32.5	2.50
	41	10.6	54.0	3.57	50.9	3.44	48.7	3.30	47.5	3.07	45.5	3.02	43.2	2.69
		21.1	54.4	3.64	51.3	3.51	48.7	3.36	47.5	3.13	45.5	3.08	43.2	2.75
		26.4	54.4	3.67	51.2	3.53	48.7	3.39	47.5	3.15	45.5	3.10	43.2	2.77
	50	10.6	54.2	3.26	51.0	3.12	48.7	2.98	47.5	2.78	45.5	2.72	43.2	2.45
		21.1	54.4	3.26	51.2	3.12	48.7	2.97	47.5	2.82	45.5	2.72	43.2	2.47
		26.4	54.4	3.27	51.2	3.09	48.7	2.95	47.5	2.79	45.5	2.69	43.2	2.45
	59	10.6	54.4	2.96	51.2	2.81	48.7	2.65	47.5	2.50	45.5	2.43	43.2	2.20
		21.1	54.4	2.88	51.2	2.73	48.7	2.58	47.5	2.50	45.5	2.35	43.2	2.20
		26.4	54.4	2.88	51.2	2.65	48.7	2.50	47.5	2.43	45.5	2.28	43.2	2.12
	68	10.6	54.4	2.58	51.2	2.43	48.7	2.28	47.5	2.20	45.5	2.12	43.2	1.97
		21.1	54.4	2.50	51.2	2.35	48.7	2.20	47.5	2.12	45.5	2.05	43.2	1.90
		26.4	54.4	2.50	51.2	2.35	48.7	2.20	47.5	2.12	45.5	2.05	43.2	1.90
	77	10.6	54.4	2.28	51.2	2.12	48.7	1.97	47.5	1.97	45.5	1.82	43.2	1.74
		21.1	54.4	2.20	51.2	2.05	48.7	1.97	47.5	1.90	45.5	1.82	43.2	1.67
		26.4	54.4	2.20	51.2	2.05	48.7	1.90	47.5	1.90	45.5	1.82	43.2	1.67
	86	10.6	54.4	2.05	51.2	1.90	48.7	1.82	47.5	1.74	45.5	1.67	43.2	1.59
		21.1	54.4	1.97	51.2	1.82	48.7	1.74	47.5	1.67	45.5	1.59	43.2	1.52
		26.4	54.4	1.97	51.2	1.82	48.7	1.74	47.5	1.67	45.5	1.59	43.2	1.52
	95	10.6	54.4	1.82	51.2	1.74	48.7	1.59	47.5	1.59	45.5	1.52	43.2	1.44
		21.1	54.4	1.82	51.2	1.67	48.7	1.59	47.5	1.52	45.5	1.44	43.2	1.37
		26.4	54.4	1.82	51.2	1.67	48.7	1.52	47.5	1.52	45.5	1.44	43.2	1.37
	104	10.6	54.4	1.67	51.2	1.59	48.7	1.44	47.5	1.44	45.5	1.37	43.2	1.29
		21.1	54.4	1.67	51.2	1.52	48.7	1.44	47.5	1.37	45.5	1.29	43.2	1.29
		26.4	54.4	1.67	51.2	1.52	48.7	1.44	47.5	1.37	45.5	1.29	43.2	1.29
	113	10.6	54.4	1.52	51.2	1.44	48.7	1.29	47.5	1.29	45.5	1.21	43.2	1.14
		21.1	54.4	1.52	51.2	1.36	48.7	1.29	47.5	1.21	45.5	1.14	43.2	1.21
		26.4	54.4	1.52	51.2	1.36	48.7	1.37	47.5	1.21	45.5	1.14	43.2	1.21

TC = Total Heating Capacity (MBh).
PI = Power input (KW).

Power input (KW) includes compressor(s) and controls.
Test condition based on 25 feet of equivalent refrigerant piping and no change in elevation between indoor unit and water source unit.

Due to our policy of continuous product innovation, some specifications may change without notification.
©LG Electronics U.S.A., Inc., Englewood Cliffs, NJ. All rights reserved. "LG" is a registered trademark of LG Corp.

PERFORMANCE DATA

Heating Capacity—ARWB072BA2 / ARWN072BA2 (208/230 Volt)

Table 31e: Heating Capacity ARWB072BA2 / ARWN072BA2

Combination Ratio (%) (Capacity index)	Inlet Water Temperature (°F)	Water Flow Rate (gpm)	Indoor Unit Entering Air Wet Bulb Temperature °F											
			61		65		68		70		72		75	
			TC	PI	TC	PI	TC	PI	TC	PI	TC	PI	TC	PI
			MBh	kW	MBh	kW	MBh	kW	MBh	kW	MBh	kW	MBh	kW
50	23	10.6	18.7	1.81	17.6	1.72	16.6	1.62	16.4	1.54	16.4	1.44	16.1	1.36
		21.1	21.2	1.96	19.9	1.86	18.8	1.76	18.6	1.67	18.5	1.57	18.2	1.48
		26.4	23.4	2.12	22.0	2.01	20.8	1.90	20.6	1.80	20.4	1.69	20.1	1.59
	32	10.6	32.6	2.60	30.1	2.47	28.0	2.33	27.5	2.21	27.1	2.08	26.1	1.96
		21.1	33.3	2.63	30.8	2.50	28.7	2.36	28.1	2.24	27.7	2.10	26.7	1.98
		26.4	33.8	2.63	31.3	2.50	29.1	2.36	28.5	2.24	28.1	2.10	27.1	1.98
	41	10.6	44.8	2.84	42.5	2.69	40.5	2.54	39.5	2.42	37.8	2.26	36.0	2.14
		21.1	45.2	2.89	42.8	2.75	40.5	2.60	39.5	2.46	37.8	2.31	36.0	2.18
		26.4	45.2	2.92	42.7	2.77	40.5	2.61	39.5	2.48	37.8	2.33	36.0	2.20
	50	10.6	45.0	2.59	42.6	2.45	40.5	2.30	39.5	2.19	37.8	2.04	36.0	1.94
		21.1	45.2	2.58	42.8	2.44	40.5	2.28	39.5	2.18	37.8	2.06	36.0	1.92
		26.4	45.2	2.60	42.7	2.45	40.5	2.29	39.5	2.19	37.8	2.04	36.0	1.93
	59	10.6	45.2	2.35	42.7	2.20	40.5	2.05	39.5	1.97	37.8	1.82	36.0	1.74
		21.1	45.2	2.28	42.7	2.12	40.5	1.97	39.5	1.90	37.8	1.82	36.0	1.67
		26.4	45.2	2.28	42.7	2.12	40.5	1.97	39.5	1.90	37.8	1.74	36.0	1.67
	68	10.6	45.2	2.05	42.7	1.90	40.5	1.82	39.5	1.74	37.8	1.67	36.0	1.52
		21.1	45.2	1.97	42.7	1.82	40.5	1.74	39.5	1.67	37.8	1.59	36.0	1.52
		26.4	45.2	1.97	42.7	1.82	40.5	1.74	39.5	1.67	37.8	1.59	36.0	1.52
	77	10.6	45.2	1.82	42.7	1.67	40.5	1.59	39.5	1.52	37.8	1.44	36.0	1.37
		21.1	45.2	1.74	42.7	1.67	40.5	1.52	39.5	1.52	37.8	1.44	36.0	1.37
		26.4	45.2	1.74	42.7	1.67	40.5	1.52	39.5	1.52	37.8	1.44	36.0	1.37
	86	10.6	45.2	1.67	42.7	1.52	40.5	1.44	39.5	1.37	37.8	1.37	36.0	1.29
		21.1	45.2	1.59	42.7	1.44	40.5	1.37	39.5	1.37	37.8	1.29	36.0	1.21
		26.4	45.2	1.59	42.7	1.44	40.5	1.37	39.5	1.37	37.8	1.29	36.0	1.21
	95	10.6	45.2	1.52	42.7	1.37	40.5	1.29	39.5	1.29	37.8	1.21	36.0	1.14
		21.1	45.2	1.44	42.7	1.37	40.5	1.29	39.5	1.21	37.8	1.21	36.0	1.14
		26.4	45.2	1.44	42.7	1.37	40.5	1.29	39.5	1.21	37.8	1.21	36.0	1.14
	104	10.6	45.2	1.37	42.7	1.29	40.5	1.21	39.5	1.14	37.8	1.14	36.0	1.06
		21.1	45.2	1.29	42.7	1.21	40.5	1.14	39.5	1.14	37.8	1.06	36.0	1.06
		26.4	45.2	1.29	42.7	1.21	40.5	1.14	39.5	1.14	37.8	1.06	36.0	1.06
	113	10.6	45.2	1.21	42.7	1.21	40.5	1.14	39.5	0.99	37.8	1.06	36.0	0.99
		21.1	45.2	1.14	42.7	1.06	40.5	0.99	39.5	1.06	37.8	0.91	36.0	0.99
		26.4	45.2	1.14	42.7	1.06	40.5	0.99	39.5	1.06	37.8	0.91	36.0	0.99

TC = Total Heating Capacity (MBh).
PI = Power input (KW).
Power input (KW) includes compressor(s) and controls.
Test condition based on 25 feet of equivalent refrigerant piping and no change in elevation between indoor unit and water source unit.

Due to our policy of continuous product innovation, some specifications may change without notification.
©LG Electronics U.S.A., Inc., Englewood Cliffs, NJ. All rights reserved. "LG" is a registered trademark of LG Corp.

Table 32a: Heating Capacity ARWB144BA2 / ARWN144BA2

Combination Ratio (%) (Capacity index)	Inlet Water Temperature (°F)	Water Flow Rate (gpm)	Indoor Unit Entering Air Wet Bulb Temperature °F											
			61		65		68		70		72		75	
			TC MBh	PI kW	TC MBh	PI kW	TC MBh	PI kW	TC MBh	PI kW	TC MBh	PI kW	TC MBh	PI kW
130	23	21.2	79.3	9.75	78.6	9.19	78.2	8.57	77.1	8.33	78.1	8.09	76.0	7.26
		42.2	89.7	10.40	88.9	9.88	88.5	9.30	87.3	9.04	88.4	8.78	86.0	7.88
		52.8	99.1	11.06	98.3	10.57	97.7	10.03	96.4	9.75	97.6	9.47	95.0	8.49
	32	21.2	137.8	13.13	134.5	12.73	131.7	12.32	128.8	11.98	129.2	11.64	123.5	10.44
		42.2	141.0	13.26	137.7	12.87	134.7	12.46	131.8	12.11	132.3	11.77	126.4	10.56
		52.8	143.2	13.26	139.8	12.87	136.8	12.46	133.8	12.11	134.3	11.77	128.3	10.56
	41	21.2	197.8	14.14	194.5	13.79	190.2	13.44	185.4	13.06	180.4	12.70	170.4	11.38
		42.2	200.6	14.39	196.0	14.05	190.3	13.71	185.4	13.33	180.4	12.95	170.4	11.62
		52.8	201.8	14.48	196.6	14.14	190.3	13.81	185.4	13.43	180.4	13.05	170.4	11.70
	50	21.2	198.6	12.78	195.1	12.39	190.3	12.17	185.4	11.86	180.4	11.45	170.4	10.34
		42.2	203.2	12.68	198.8	12.43	193.3	12.26	188.3	11.84	183.1	11.43	173.2	10.30
		52.8	204.3	12.86	200.1	12.60	194.5	12.31	189.3	11.89	184.4	11.61	174.2	10.80
	59	21.2	199.4	11.43	195.7	11.00	190.3	10.91	185.4	10.66	180.4	10.21	170.4	9.29
		42.2	205.9	10.97	201.6	10.82	196.3	10.82	191.3	10.36	185.9	9.90	175.9	8.99
		52.8	206.9	11.24	203.6	11.06	198.8	10.82	193.3	10.36	188.3	10.18	177.9	9.90
	68	21.2	206.9	10.51	203.1	10.08	197.8	9.87	192.3	9.60	186.8	9.41	175.9	8.99
		42.2	213.3	10.21	209.6	10.05	203.7	9.84	198.3	9.75	193.3	9.66	182.4	8.68
		52.8	214.3	10.21	211.1	10.05	206.2	9.90	200.3	9.75	194.8	9.66	183.9	9.23
	77	21.2	216.7	10.05	211.2	9.78	206.2	9.60	202.3	9.44	197.8	9.29	186.4	8.68
		42.2	216.7	9.90	211.2	9.72	206.2	9.44	202.3	9.29	197.8	9.14	186.4	8.53
		52.8	216.7	9.75	211.2	9.48	206.2	9.29	202.3	9.14	197.8	8.99	186.4	8.38
	86	21.2	216.7	9.75	211.2	9.32	206.2	9.20	202.3	8.99	197.8	8.84	186.4	8.23
		42.2	216.7	9.44	211.2	9.26	206.2	8.99	202.3	8.84	197.8	8.53	186.4	7.92
		52.8	216.7	9.29	211.2	9.02	206.2	8.84	202.3	8.68	197.8	8.53	186.4	7.92
	95	21.2	216.7	9.29	211.2	9.02	206.2	8.84	202.3	8.53	197.8	8.23	186.4	7.62
		42.2	216.7	8.99	211.2	8.80	206.2	8.68	202.3	8.38	197.8	8.07	186.4	7.31
		52.8	216.7	8.99	211.2	8.71	206.2	8.53	202.3	8.23	197.8	7.92	186.4	7.31
	104	21.2	216.7	8.99	211.2	8.71	206.2	8.53	202.3	8.23	197.8	7.92	186.4	7.16
		42.2	216.7	8.68	211.2	8.50	206.2	8.23	202.3	7.92	197.8	7.62	186.4	6.86
		52.8	216.7	8.53	211.2	8.35	206.2	8.23	202.3	7.92	197.8	7.62	186.4	6.86
	113	21.2	216.7	8.68	211.2	8.41	206.2	8.23	202.3	7.92	197.8	7.62	186.4	6.70
		42.2	216.7	8.38	211.2	8.20	206.2	7.77	202.3	7.46	197.8	7.16	186.4	6.40
		52.8	216.7	8.07	211.2	7.98	206.2	7.92	202.3	7.62	197.8	7.31	186.4	6.40
120	23	21.2	75.4	9.75	74.7	9.19	74.3	8.57	73.4	8.21	74.0	7.97	72.0	7.14
		42.2	85.3	10.40	84.5	9.88	84.1	9.30	83.1	8.91	83.7	8.65	81.5	7.75
		52.8	94.2	11.06	93.4	10.57	92.9	10.03	91.8	9.61	92.5	9.33	90.0	8.35
	32	21.2	131.0	13.13	127.9	12.73	125.1	12.32	122.6	11.81	122.5	11.47	117.0	10.27
		42.2	134.0	13.26	130.9	12.87	128.1	12.46	125.5	11.94	125.3	11.60	119.7	10.38
		52.8	136.1	13.26	132.9	12.87	130.0	12.46	127.4	11.94	127.3	11.60	121.6	10.38
	41	21.2	188.4	14.14	185.1	13.79	180.8	13.44	176.4	12.88	170.9	12.51	161.5	11.20
		42.2	191.1	14.39	186.5	14.05	180.9	13.71	176.4	13.14	170.9	12.76	161.5	11.43
		52.8	192.2	14.48	185.5	14.14	180.9	13.81	176.4	13.23	170.9	12.85	161.5	11.51
	50	21.2	189.2	12.69	185.7	12.35	180.8	12.08	176.4	11.69	170.9	11.28	161.5	10.17
		42.2	192.8	12.86	188.6	12.52	182.9	12.26	178.4	11.75	172.7	11.26	163.2	10.21
		52.8	193.8	12.82	188.0	12.52	183.6	12.31	179.1	11.80	173.4	11.30	164.0	10.55
	59	21.2	190.0	11.24	186.2	10.91	180.9	10.72	176.4	10.51	170.9	10.05	161.5	9.14
		42.2	194.5	11.33	190.7	11.00	184.9	10.82	180.4	10.36	174.4	9.75	165.0	8.99
		52.8	195.4	11.15	190.6	10.91	186.4	10.82	181.9	10.36	175.9	9.75	166.5	9.60
	68	21.2	195.4	10.08	191.7	9.69	185.9	9.44	180.9	9.29	174.9	9.14	165.5	8.65
		42.2	200.4	10.08	196.2	9.84	189.8	9.60	185.4	9.44	179.4	9.11	169.5	8.53
		52.8	201.4	9.99	196.0	9.75	191.3	9.60	186.4	9.44	180.4	9.14	170.4	8.84
	77	21.2	203.7	9.51	197.8	9.08	191.3	8.90	187.3	8.68	182.4	8.53	172.4	7.92
		42.2	204.2	9.35	197.8	9.02	191.3	8.84	187.3	8.53	182.4	8.38	172.4	7.77
		52.8	204.7	9.02	197.8	8.77	191.3	8.68	187.3	8.53	182.4	8.23	172.4	7.77
	86	21.2	204.7	9.05	197.8	8.62	191.3	8.38	187.3	8.07	182.4	7.92	172.4	7.31
		42.2	204.7	8.74	197.8	8.41	191.3	8.23	187.3	7.92	182.4	7.62	172.4	7.16
		52.8	204.7	8.47	197.8	8.23	191.3	8.07	187.3	7.92	182.4	7.62	172.4	7.01
	95	21.2	204.7	8.59	197.8	8.17	191.3	7.92	187.3	7.62	182.4	7.31	172.4	6.70
		42.2	204.7	8.10	197.8	7.86	191.3	7.62	187.3	7.31	182.4	7.01	172.4	6.55
		52.8	204.7	8.01	197.8	7.80	191.3	7.62	187.3	7.31	182.4	7.01	172.4	6.40
	104	21.2	204.7	8.29	197.8	7.77	191.3	7.46	187.3	7.16	182.4	6.86	172.4	6.25
		42.2	204.7	7.65	197.8	7.40	191.3	7.16	187.3	6.86	182.4	6.55	172.4	6.09
		52.8	204.7	7.56	197.8	7.31	191.3	7.16	187.3	6.86	182.4	6.55	172.4	5.94
	113	21.2	204.7	7.98	197.8	7.37	191.3	7.01	187.3	6.70	182.4	6.40	172.4	5.79
		42.2	204.7	7.19	197.8	6.95	191.3	6.70	187.3	6.40	182.4	6.09	172.4	5.64
		52.8	204.7	7.10	197.8	6.82	191.3	6.70	187.3	6.40	182.4	6.09	172.4	5.48

TC = Total Heating Capacity (MBh).
PI = Power input (KW).

Power input (KW) includes compressor(s) and controls.
Test condition based on 25 feet of equivalent refrigerant piping and no change in elevation between indoor unit and water source unit.

Due to our policy of continuous product innovation, some specifications may change without notification.
©LG Electronics U.S.A., Inc., Englewood Cliffs, NJ. All rights reserved. "LG" is a registered trademark of LG Corp.

PERFORMANCE DATA

Heating Capacity—ARWB144BA2 / ARWN144BA2 (208/230 Volt)

Table 32b: Heating Capacity ARWB144BA2 / ARWN144BA2

Combination Ratio (%) (Capacity index)	Inlet Water Temperature (°F)	Water Flow Rate (gpm)	Indoor Unit Entering Air Wet Bulb Temperature °F											
			61		65		68		70		72		75	
			TC	PI	TC	PI	TC	PI	TC	PI	TC	PI	TC	PI
			MBh	kW	MBh	kW	MBh	kW	MBh	kW	MBh	kW	MBh	kW
110	23	21.2	71.2	9.86	70.8	9.19	70.4	8.57	69.7	8.21	69.7	7.97	68.3	7.14
		42.2	80.6	10.53	80.1	9.88	79.7	9.30	78.9	8.91	78.9	8.65	77.2	7.75
		52.8	89.1	11.20	88.5	10.57	88.0	10.03	87.1	9.61	87.1	9.33	85.3	8.35
	32	21.2	123.8	13.30	121.2	12.73	118.6	12.32	116.4	11.81	115.4	11.47	110.9	10.27
		42.2	126.7	13.43	124.0	12.87	121.4	12.46	119.1	11.94	118.1	11.60	113.5	10.38
		52.8	128.7	13.43	125.9	12.87	123.2	12.46	120.9	11.94	119.9	11.60	115.2	10.38
	41	21.2	180.2	14.33	175.8	13.79	171.4	13.44	167.5	12.88	161.0	12.51	153.1	11.20
		42.2	182.7	14.58	177.1	14.05	171.4	13.71	167.5	13.14	161.0	12.76	153.1	11.43
		52.8	183.8	14.67	177.6	14.14	171.4	13.81	167.5	13.23	161.0	12.85	153.1	11.51
	50	21.2	180.9	12.82	176.3	12.39	171.4	12.13	167.5	11.69	161.0	11.28	153.1	10.17
		42.2	183.7	12.91	178.2	12.52	172.4	12.26	168.5	11.75	162.0	11.26	153.8	10.21
		52.8	184.7	12.91	178.9	12.52	172.9	12.24	168.7	11.72	162.2	11.30	154.3	10.32
	59	21.2	181.7	11.30	176.8	11.00	171.4	10.82	167.5	10.51	161.0	10.05	153.1	9.14
		42.2	184.6	11.24	179.3	11.00	173.4	10.82	169.5	10.36	163.0	9.75	154.5	8.99
		52.8	185.6	11.15	180.3	10.91	174.4	10.66	170.0	10.21	163.5	9.75	155.5	9.14
	68	21.2	185.1	9.78	179.8	9.54	173.9	9.29	169.5	9.14	163.0	8.84	154.5	8.29
		42.2	189.1	9.87	182.3	9.54	175.9	9.29	171.9	9.14	165.0	8.68	157.0	8.23
		52.8	190.1	9.87	183.8	9.54	176.9	9.29	172.4	8.99	166.0	8.68	157.5	8.23
	77	21.2	190.3	8.87	184.4	8.53	176.9	8.38	172.9	8.07	167.0	7.77	158.0	7.16
		42.2	191.8	8.80	184.4	8.38	176.9	8.23	172.9	7.92	167.0	7.62	158.0	7.16
		52.8	192.8	8.80	184.4	8.41	176.9	8.07	172.9	7.92	167.0	7.46	158.0	7.01
	86	21.2	192.8	8.07	184.4	7.77	176.9	7.46	172.9	7.31	167.0	6.86	158.0	6.40
		42.2	192.8	7.92	184.4	7.62	176.9	7.31	172.9	7.16	167.0	6.70	158.0	6.25
		52.8	192.8	7.86	184.4	7.46	176.9	7.16	172.9	7.01	167.0	6.70	158.0	6.25
	95	21.2	192.8	7.62	184.4	7.16	176.9	6.86	172.9	6.55	167.0	6.25	158.0	5.79
		42.2	192.8	7.31	184.4	7.01	176.9	6.70	172.9	6.40	167.0	6.09	158.0	5.64
		52.8	192.8	7.13	184.4	6.86	176.9	6.55	172.9	6.40	167.0	6.09	158.0	5.64
	104	21.2	192.8	7.16	184.4	6.86	176.9	6.40	172.9	6.09	167.0	5.79	158.0	5.33
		42.2	192.8	6.86	184.4	6.55	176.9	6.09	172.9	5.94	167.0	5.64	158.0	5.18
		52.8	192.8	6.76	184.4	6.40	176.9	6.09	172.9	5.79	167.0	5.48	158.0	5.03
	113	21.2	192.8	6.70	184.4	6.55	176.9	5.94	172.9	5.64	167.0	5.33	158.0	4.87
		42.2	192.8	6.40	184.4	6.09	176.9	5.48	172.9	5.48	167.0	5.18	158.0	4.72
		52.8	192.8	6.40	184.4	5.94	176.9	5.64	172.9	5.18	167.0	4.87	158.0	4.42
100	23	21.2	67.3	9.86	66.9	9.31	66.5	8.57	66.0	8.21	65.4	7.85	64.3	7.14
		42.2	76.2	10.53	75.7	10.01	75.3	9.30	74.7	8.91	74.0	8.52	72.7	7.75
		52.8	84.2	11.20	83.7	10.70	83.2	10.03	82.5	9.61	81.8	9.19	80.3	8.35
	32	21.2	117.0	13.30	114.5	12.90	112.1	12.32	110.2	11.81	108.2	11.29	104.4	10.27
		42.2	119.8	13.43	117.2	13.04	114.7	12.46	112.7	11.94	110.8	11.42	106.8	10.38
		52.8	121.6	13.43	119.0	13.04	116.4	12.46	114.5	11.94	112.5	11.42	108.5	10.38
	41	21.2	172.5	14.33	166.4	13.97	161.9	13.44	158.5	12.88	151.1	12.32	144.1	11.20
		42.2	174.8	14.58	167.6	14.24	162.0	13.71	158.5	13.14	151.1	12.57	144.1	11.43
		52.8	175.8	14.67	168.1	14.33	162.0	13.81	158.5	13.23	151.1	12.66	144.1	11.51
	50	21.2	173.1	12.82	166.9	12.52	162.0	12.13	158.5	11.69	151.1	11.11	144.1	10.17
		42.2	174.8	13.05	167.7	12.66	162.0	12.26	158.5	11.75	151.1	11.16	144.1	10.21
		52.8	176.1	13.00	168.5	12.66	162.0	12.24	158.5	11.72	151.1	11.13	144.1	10.17
	59	21.2	173.8	11.30	167.4	11.06	162.0	10.82	158.5	10.51	151.1	9.90	144.1	9.14
		42.2	174.8	11.52	167.9	11.09	162.0	10.82	158.5	10.36	151.1	9.75	144.1	8.99
		52.8	176.3	11.33	168.8	11.00	162.0	10.66	158.5	10.21	151.1	9.60	144.1	8.84
	68	21.2	175.3	9.66	168.4	9.38	162.0	9.14	158.5	8.99	151.1	8.38	144.1	7.92
		42.2	177.8	9.84	168.8	9.41	162.0	9.14	158.5	8.84	151.1	8.23	144.1	7.62
		52.8	178.8	9.66	170.3	9.32	162.0	8.99	158.5	8.68	151.1	8.07	144.1	7.46
	77	21.2	177.4	8.41	170.9	8.10	162.0	7.77	158.5	7.46	151.1	7.01	144.1	6.40
		42.2	179.9	8.44	170.9	7.92	162.0	7.62	158.5	7.31	151.1	6.86	144.1	6.40
		52.8	180.9	8.26	170.9	7.86	162.0	7.46	158.5	7.16	151.1	6.86	144.1	6.25
	86	21.2	180.9	7.62	170.9	7.01	162.0	6.55	158.5	6.40	151.1	5.94	144.1	5.64
		42.2	180.9	7.46	170.9	6.86	162.0	6.49	158.5	6.25	151.1	5.94	144.1	5.48
		52.8	180.9	7.31	170.9	6.86	162.0	6.40	158.5	6.25	151.1	5.79	144.1	5.48
	95	21.2	180.9	7.01	170.9	6.40	162.0	5.79	158.5	5.64	151.1	5.33	144.1	4.87
		42.2	180.9	6.70	170.9	6.09	162.0	5.73	158.5	5.48	151.1	5.18	144.1	4.72
		52.8	180.9	6.70	170.9	6.09	162.0	5.64	158.5	5.48	151.1	5.18	144.1	4.72
	104	21.2	180.9	6.55	170.9	5.94	162.0	5.18	158.5	5.03	151.1	4.72	144.1	4.42
		42.2	180.9	6.25	170.9	5.64	162.0	5.12	158.5	4.87	151.1	4.57	144.1	4.27
		52.8	180.9	6.09	170.9	5.64	162.0	5.03	158.5	4.87	151.1	4.57	144.1	4.27
	113	21.2	180.9	6.09	170.9	5.48	162.0	4.57	158.5	4.42	151.1	4.11	144.1	3.96
		42.2	180.9	5.79	170.9	5.18	162.0	4.51	158.5	4.27	151.1	3.96	144.1	3.81
		52.8	180.9	5.48	170.9	5.18	162.0	4.42	158.5	4.27	151.1	3.96	144.1	3.81

TC = Total Heating Capacity (MBh).
PI = Power input (KW).

Power input (KW) includes compressor(s) and controls.
Test condition based on 25 feet of equivalent refrigerant piping and no change in elevation between indoor unit and water source unit.

Due to our policy of continuous product innovation, some specifications may change without notification.
©LG Electronics U.S.A., Inc., Englewood Cliffs, NJ. All rights reserved. "LG" is a registered trademark of LG Corp.

PERFORMANCE DATA

Heating Capacity—ARWB144BA2 / ARWN144BA2 (208/230 Volt)

Table 32c: Heating Capacity ARWB144BA2 / ARWN144BA2

Combination Ratio (%) (Capacity index)	Inlet Water Temperature (°F)	Water Flow Rate (gpm)	Indoor Unit Entering Air Wet Bulb Temperature °F											
			61		65		68		70		72		75	
			TC MBh	PI kW	TC MBh	PI kW	TC MBh	PI kW	TC MBh	PI kW	TC MBh	PI kW	TC MBh	PI kW
90	23	21.2	63.6	9.16	61.6	8.35	59.8	7.36	59.4	7.02	58.9	6.77	57.8	6.07
		42.2	72.0	9.77	69.7	8.97	67.7	7.99	67.2	7.62	66.7	7.34	65.4	6.58
		52.8	79.5	10.38	77.0	9.59	74.8	8.61	74.2	8.22	73.7	7.92	72.3	7.10
	32	21.2	110.6	12.29	105.4	11.53	100.7	10.58	99.1	10.09	97.5	9.73	94.0	8.73
		42.2	113.2	12.41	107.9	11.65	103.1	10.71	101.4	10.21	99.8	9.84	96.2	8.83
		52.8	114.9	12.41	109.6	11.65	104.7	10.71	103.0	10.21	101.4	9.84	97.6	8.83
	41	21.2	155.5	13.22	150.3	12.48	145.5	11.54	142.6	11.01	136.2	10.61	129.7	9.52
		42.2	156.1	13.45	149.8	12.71	145.6	11.78	142.6	11.23	136.2	10.83	129.7	9.71
		52.8	157.1	13.54	150.3	12.80	145.6	11.86	142.6	11.32	136.2	10.91	129.7	9.78
	50	21.2	156.1	11.62	150.7	11.07	145.6	10.42	142.6	10.00	136.2	9.57	129.7	8.64
		42.2	155.9	11.66	149.9	11.11	145.6	10.46	142.6	10.03	136.2	9.53	129.7	8.66
		52.8	156.9	11.63	150.4	11.07	145.6	10.43	142.6	10.00	136.2	9.57	129.7	8.70
	59	21.2	156.8	10.02	151.2	9.66	145.6	9.29	142.6	8.99	136.2	8.53	129.7	7.77
		42.2	155.7	9.87	150.1	9.51	145.6	9.14	142.6	8.84	136.2	8.23	129.7	7.62
		52.8	156.7	9.72	150.6	9.35	145.6	8.99	142.6	8.68	136.2	8.23	129.7	7.62
	68	21.2	157.8	8.50	151.7	8.23	145.6	7.92	142.6	7.62	136.2	7.31	129.7	6.86
		42.2	157.2	8.50	150.6	8.13	145.6	7.77	142.6	7.46	136.2	7.01	129.7	6.55
		52.8	157.7	8.35	151.1	8.07	145.6	7.77	142.6	7.46	136.2	7.01	129.7	6.55
	77	21.2	161.0	7.40	154.0	7.01	145.6	6.70	142.6	6.40	136.2	6.09	129.7	5.64
		42.2	162.5	7.34	154.0	6.95	145.6	6.55	142.6	6.40	136.2	5.94	129.7	5.48
		52.8	163.0	7.16	154.0	6.79	145.6	6.55	142.6	6.25	136.2	5.94	129.7	5.48
	86	21.2	163.0	6.70	154.0	6.25	145.6	5.79	142.6	5.64	136.2	5.33	129.7	4.87
		42.2	163.0	6.55	154.0	6.09	145.6	5.64	142.6	5.48	136.2	5.18	129.7	4.87
		52.8	163.0	6.40	154.0	5.94	145.6	5.64	142.6	5.48	136.2	5.18	129.7	4.72
	95	21.2	163.0	6.09	154.0	5.64	145.6	5.18	142.6	5.03	136.2	4.72	129.7	4.42
		42.2	163.0	5.94	154.0	5.48	145.6	5.03	142.6	4.87	136.2	4.57	129.7	4.27
		52.8	163.0	5.79	154.0	5.33	145.6	4.87	142.6	4.72	136.2	4.57	129.7	4.27
	104	21.2	163.0	5.64	154.0	5.18	145.6	4.57	142.6	4.42	136.2	4.27	129.7	3.96
		42.2	163.0	5.33	154.0	5.03	145.6	4.42	142.6	4.27	136.2	4.11	129.7	3.81
		52.8	163.0	5.33	154.0	5.03	145.6	4.42	142.6	4.27	136.2	4.11	129.7	3.81
	113	21.2	163.0	5.18	154.0	4.72	145.6	3.96	142.6	3.81	136.2	3.81	129.7	3.50
		42.2	163.0	4.72	154.0	4.57	145.6	3.81	142.6	3.66	136.2	3.66	129.7	3.35
		52.8	163.0	4.87	154.0	4.72	145.6	3.96	142.6	3.81	136.2	3.66	129.7	3.35
80	23	21.2	60.1	6.56	56.3	6.31	53.3	6.03	52.7	5.83	52.5	5.56	51.4	5.12
		42.2	68.0	7.12	63.7	6.84	60.3	6.55	59.7	6.33	59.4	6.03	58.2	5.55
		52.8	75.2	7.68	70.4	7.38	66.6	7.06	65.9	6.82	65.6	6.50	64.3	5.99
	32	21.2	104.5	9.44	96.3	9.07	89.7	8.68	88.1	8.38	86.9	7.99	83.5	7.36
		42.2	106.9	9.55	98.6	9.17	91.8	8.78	90.1	8.48	88.9	8.08	85.5	7.44
		52.8	108.6	9.55	100.1	9.17	93.2	8.78	91.5	8.48	90.3	8.08	86.8	7.44
	41	21.2	143.9	10.29	135.8	9.89	129.6	9.46	126.7	9.14	121.3	8.72	115.3	8.02
		42.2	145.1	10.50	136.9	10.09	129.7	9.65	126.7	9.33	121.3	8.89	115.3	8.19
		52.8	145.1	10.58	136.7	10.16	129.7	9.72	126.7	9.40	121.3	8.96	115.3	8.25
	50	21.2	144.5	9.41	136.2	8.98	129.7	8.54	126.7	8.30	121.3	7.86	115.3	7.29
		42.2	145.1	9.37	136.8	8.93	129.7	8.56	126.7	8.32	121.3	7.87	115.3	7.29
		52.8	145.1	9.33	136.7	8.97	129.7	8.59	126.7	8.28	121.3	7.83	115.3	7.25
	59	21.2	145.1	8.53	136.7	8.07	129.7	7.62	126.7	7.46	121.3	7.01	115.3	6.55
		42.2	145.1	8.23	136.7	7.77	129.7	7.46	126.7	7.31	121.3	6.86	115.3	6.40
		52.8	145.1	8.07	136.7	7.77	129.7	7.46	126.7	7.16	121.3	6.70	115.3	6.25
	68	21.2	145.1	7.16	136.7	6.86	129.7	6.55	126.7	6.40	121.3	6.09	115.3	5.64
		42.2	145.1	7.01	136.7	6.70	129.7	6.55	126.7	6.25	121.3	5.94	115.3	5.48
		52.8	145.1	6.86	136.7	6.55	129.7	6.40	126.7	6.25	121.3	5.79	115.3	5.48
	77	21.2	145.1	6.40	136.7	5.94	129.7	5.64	126.7	5.48	121.3	5.18	115.3	4.87
		42.2	145.1	6.25	136.7	5.79	129.7	5.64	126.7	5.33	121.3	5.03	115.3	4.72
		52.8	145.1	6.09	136.7	5.79	129.7	5.48	126.7	5.33	121.3	5.03	115.3	4.72
	86	21.2	145.1	5.64	136.7	5.33	129.7	5.03	126.7	4.87	121.3	4.57	115.3	4.27
		42.2	145.1	5.48	136.7	5.18	129.7	4.87	126.7	4.72	121.3	4.42	115.3	4.11
		52.8	145.1	5.48	136.7	5.18	129.7	4.87	126.7	4.72	121.3	4.42	115.3	4.11
	95	21.2	145.1	5.18	136.7	4.87	129.7	4.42	126.7	4.27	121.3	4.11	115.3	3.81
		42.2	145.1	5.03	136.7	4.72	129.7	4.27	126.7	4.27	121.3	3.96	115.3	3.81
		52.8	145.1	5.03	136.7	4.57	129.7	4.27	126.7	4.11	121.3	3.96	115.3	3.66
	104	21.2	145.1	4.87	136.7	4.42	129.7	3.96	126.7	3.96	121.3	3.66	115.3	3.50
		42.2	145.1	4.57	136.7	4.27	129.7	3.96	126.7	3.81	121.3	3.66	115.3	3.35
		52.8	145.1	4.57	136.7	4.27	129.7	3.81	126.7	3.81	121.3	3.66	115.3	3.35
	113	21.2	145.1	4.57	136.7	3.96	129.7	3.50	126.7	3.66	121.3	3.20	115.3	3.20
		42.2	145.1	4.11	136.7	3.81	129.7	3.66	126.7	3.35	121.3	3.35	115.3	2.89
		52.8	145.1	4.11	136.7	3.96	129.7	3.35	126.7	3.50	121.3	3.35	115.3	3.05

TC = Total Heating Capacity (MBh).
PI = Power input (KW).

Power input (KW) includes compressor(s) and controls.
Test condition based on 25 feet of equivalent refrigerant piping and no change in elevation between indoor unit and water source unit.

LG

Due to our policy of continuous product innovation, some specifications may change without notification.
©LG Electronics U.S.A., Inc., Englewood Cliffs, NJ. All rights reserved. "LG" is a registered trademark of LG Corp.

PERFORMANCE DATA

Heating Capacity—ARWB144BA2 / ARWN144BA2 (208/230 Volt)

Table 32d: Heating Capacity ARWB144BA2 / ARWN144BA2

Combination Ratio (%) (Capacity index)	Inlet Water Temperature (°F)	Water Flow Rate (gpm)	Indoor Unit Entering Air Wet Bulb Temperature °F											
			61		65		68		70		72		75	
			TC MBh	PI kW	TC MBh	PI kW	TC MBh	PI kW	TC MBh	PI kW	TC MBh	PI kW	TC MBh	PI kW
70	23	21.2	52.5	5.63	49.3	5.35	46.5	5.19	46.1	4.88	45.8	4.71	45.0	4.28
		42.2	59.4	6.10	55.8	5.81	52.7	5.63	52.2	5.29	51.9	5.11	50.9	4.65
		52.8	65.6	6.58	61.7	6.27	58.2	6.07	57.6	5.71	57.3	5.51	56.2	5.01
	32	21.2	91.3	8.09	84.4	7.70	78.4	7.46	77.0	7.01	75.8	6.78	73.1	6.16
		42.2	93.4	8.18	86.4	7.79	80.2	7.55	78.8	7.10	77.6	6.85	74.8	6.23
		52.8	94.8	8.18	87.7	7.79	81.4	7.55	80.0	7.10	78.8	6.85	75.9	6.23
	41	21.2	125.6	8.82	119.0	8.40	113.2	8.14	110.8	7.65	105.8	7.39	100.9	6.72
		42.2	126.7	9.00	119.9	8.57	113.3	8.30	110.8	7.81	105.8	7.54	100.9	6.86
		52.8	126.7	9.07	119.8	8.63	113.3	8.36	110.8	7.86	105.8	7.59	100.9	6.90
	50	21.2	126.2	8.07	119.4	7.63	113.3	7.34	110.8	6.95	105.8	6.67	100.9	6.10
		42.2	126.7	8.01	119.9	7.56	113.3	7.27	110.8	6.95	105.8	6.66	100.9	6.09
		52.8	126.7	8.04	119.8	7.59	113.3	7.30	110.8	6.98	105.8	6.62	100.9	6.12
	59	21.2	126.7	7.31	119.8	6.86	113.3	6.55	110.8	6.25	105.8	5.94	100.9	5.48
		42.2	126.7	7.01	119.8	6.55	113.3	6.25	110.8	6.09	105.8	5.79	100.9	5.33
		52.8	126.7	7.01	119.8	6.55	113.3	6.25	110.8	6.09	105.8	5.64	100.9	5.33
	68	21.2	126.7	6.09	119.8	5.79	113.3	5.64	110.8	5.48	105.8	5.18	100.9	4.87
		42.2	126.7	5.94	119.8	5.64	113.3	5.48	110.8	5.33	105.8	5.03	100.9	4.72
		52.8	126.7	5.94	119.8	5.64	113.3	5.48	110.8	5.18	105.8	5.03	100.9	4.57
	77	21.2	126.7	5.48	119.8	5.18	113.3	4.87	110.8	4.72	105.8	4.42	100.9	4.11
		42.2	126.7	5.33	119.8	5.03	113.3	4.72	110.8	4.57	105.8	4.42	100.9	4.11
		52.8	126.7	5.18	119.8	4.87	113.3	4.72	110.8	4.57	105.8	4.27	100.9	4.11
	86	21.2	126.7	4.87	119.8	4.57	113.3	4.27	110.8	4.11	105.8	3.96	100.9	3.66
		42.2	126.7	4.72	119.8	4.42	113.3	4.11	110.8	4.11	105.8	3.81	100.9	3.66
		52.8	126.7	4.72	119.8	4.42	113.3	4.11	110.8	3.96	105.8	3.81	100.9	3.66
	95	21.2	126.7	4.42	119.8	4.11	113.3	3.81	110.8	3.81	105.8	3.50	100.9	3.35
		42.2	126.7	4.27	119.8	3.96	113.3	3.81	110.8	3.66	105.8	3.50	100.9	3.20
		52.8	126.7	4.27	119.8	3.96	113.3	3.66	110.8	3.66	105.8	3.50	100.9	3.20
	104	21.2	126.7	4.11	119.8	3.81	113.3	3.50	110.8	3.35	105.8	3.20	100.9	3.05
		42.2	126.7	3.96	119.8	3.66	113.3	3.35	110.8	3.35	105.8	3.20	100.9	2.89
		52.8	126.7	3.96	119.8	3.66	113.3	3.35	110.8	3.20	105.8	3.05	100.9	2.89
	113	21.2	126.7	3.81	119.8	3.50	113.3	3.20	110.8	2.89	105.8	2.89	100.9	2.74
		42.2	126.7	3.66	119.8	3.35	113.3	2.89	110.8	3.05	105.8	2.89	100.9	2.59
		52.8	126.7	3.66	119.8	3.35	113.3	3.05	110.8	2.74	105.8	2.59	100.9	2.59
60	23	21.2	45.1	4.57	42.2	4.40	40.0	4.22	39.5	3.93	39.4	3.87	38.6	3.45
		42.2	51.0	4.96	47.7	4.78	45.3	4.58	44.7	4.26	44.6	4.19	43.6	3.74
		52.8	56.4	5.35	52.7	5.15	50.0	4.94	49.4	4.59	49.2	4.52	48.2	4.04
	32	21.2	78.4	6.57	72.2	6.33	67.4	6.07	66.0	5.65	65.2	5.56	62.6	4.96
		42.2	80.2	6.65	73.8	6.40	69.0	6.14	67.5	5.71	66.7	5.62	64.1	5.02
		52.8	81.4	6.65	75.0	6.40	70.0	6.14	68.5	5.71	67.7	5.62	65.1	5.02
	41	21.2	107.9	7.17	101.8	6.90	97.3	6.62	94.9	6.16	90.9	6.06	86.5	5.41
		42.2	108.8	7.32	102.5	7.05	97.4	6.76	94.9	6.28	90.9	6.19	86.5	5.52
		52.8	108.8	7.37	102.4	7.10	97.4	6.81	94.9	6.33	90.9	6.23	86.5	5.56
	50	21.2	108.4	6.56	102.1	6.27	97.4	5.98	94.9	5.59	90.9	5.47	86.5	4.91
		42.2	108.8	6.55	102.4	6.26	97.4	5.97	94.9	5.66	90.9	5.45	86.5	4.97
		52.8	108.8	6.58	102.4	6.21	97.4	5.92	94.9	5.60	90.9	5.40	86.5	4.91
	59	21.2	108.8	5.94	102.4	5.64	97.4	5.33	94.9	5.03	90.9	4.87	86.5	4.42
		42.2	108.8	5.79	102.4	5.48	97.4	5.18	94.9	5.03	90.9	4.72	86.5	4.42
		52.8	108.8	5.79	102.4	5.33	97.4	5.03	94.9	4.87	90.9	4.57	86.5	4.27
	68	21.2	108.8	5.18	102.4	4.87	97.4	4.57	94.9	4.42	90.9	4.27	86.5	3.96
		42.2	108.8	5.03	102.4	4.72	97.4	4.42	94.9	4.27	90.9	4.11	86.5	3.81
		52.8	108.8	5.03	102.4	4.72	97.4	4.42	94.9	4.27	90.9	4.11	86.5	3.81
	77	21.2	108.8	4.57	102.4	4.27	97.4	3.96	94.9	3.96	90.9	3.66	86.5	3.50
		42.2	108.8	4.42	102.4	4.11	97.4	3.96	94.9	3.81	90.9	3.66	86.5	3.35
		52.8	108.8	4.42	102.4	4.11	97.4	3.81	94.9	3.81	90.9	3.66	86.5	3.35
	86	21.2	108.8	4.11	102.4	3.81	97.4	3.66	94.9	3.50	90.9	3.35	86.5	3.20
		42.2	108.8	3.96	102.4	3.66	97.4	3.50	94.9	3.35	90.9	3.20	86.5	3.05
		52.8	108.8	3.96	102.4	3.66	97.4	3.50	94.9	3.35	90.9	3.20	86.5	3.05
	95	21.2	108.8	3.66	102.4	3.50	97.4	3.20	94.9	3.20	90.9	3.05	86.5	2.89
		42.2	108.8	3.66	102.4	3.35	97.4	3.20	94.9	3.05	90.9	2.89	86.5	2.74
		52.8	108.8	3.66	102.4	3.35	97.4	3.05	94.9	3.05	90.9	2.89	86.5	2.74
	104	21.2	108.8	3.35	102.4	3.20	97.4	2.89	94.9	2.89	90.9	2.74	86.5	2.59
		42.2	108.8	3.35	102.4	3.05	97.4	2.89	94.9	2.74	90.9	2.59	86.5	2.59
		52.8	108.8	3.35	102.4	3.05	97.4	2.89	94.9	2.74	90.9	2.59	86.5	2.59
	113	21.2	108.8	3.05	102.4	2.89	97.4	2.59	94.9	2.59	90.9	2.44	86.5	2.28
		42.2	108.8	3.05	102.4	2.74	97.4	2.59	94.9	2.44	90.9	2.28	86.5	2.44
		52.8	108.8	3.05	102.4	2.74	97.4	2.74	94.9	2.44	90.9	2.28	86.5	2.44

TC = Total Heating Capacity (MBh).
PI = Power input (KW).

Power input (KW) includes compressor(s) and controls.
Test condition based on 25 feet of equivalent refrigerant piping and no change in elevation between indoor unit and water source unit.

Due to our policy of continuous product innovation, some specifications may change without notification.
©LG Electronics U.S.A., Inc., Englewood Cliffs, NJ. All rights reserved. "LG" is a registered trademark of LG Corp.

PERFORMANCE DATA

Heating Capacity—ARWB144BA2 / ARWN144BA2 (208/230 Volt)

Table 32e: Heating Capacity ARWB144BA2 / ARWN144BA2

Combination Ratio (%) (Capacity index)	Inlet Water Temperature (°F)	Water Flow Rate (gpm)	Indoor Unit Entering Air Wet Bulb Temperature °F											
			61		65		68		70		72		75	
			TC	PI	TC	PI	TC	PI	TC	PI	TC	PI	TC	PI
			MBh	kW	MBh	kW	MBh	kW	MBh	kW	MBh	kW	MBh	kW
50	23	21.2	37.5	3.63	35.2	3.45	33.3	3.26	32.9	3.09	32.7	2.90	32.1	2.74
		42.2	42.4	3.94	39.8	3.74	37.6	3.53	37.2	3.36	37.0	3.15	36.4	2.97
		52.8	46.8	4.25	44.0	4.04	41.6	3.81	41.1	3.62	40.9	3.39	40.2	3.20
	32	21.2	65.1	5.22	60.2	4.96	56.0	4.68	54.9	4.45	54.1	4.17	52.2	3.94
		42.2	66.7	5.29	61.7	5.02	57.3	4.74	56.2	4.50	55.4	4.22	53.4	3.98
		52.8	67.7	5.29	62.6	5.02	58.2	4.74	57.0	4.50	56.2	4.22	54.2	3.98
	41	21.2	89.7	5.70	85.0	5.41	81.0	5.11	79.0	4.85	75.5	4.55	72.1	4.29
		42.2	90.4	5.81	85.6	5.52	81.0	5.21	79.0	4.95	75.5	4.64	72.1	4.38
		52.8	90.4	5.86	85.5	5.56	81.0	5.25	79.0	4.99	75.5	4.67	72.1	4.41
	50	21.2	90.1	5.21	85.2	4.91	81.0	4.61	79.0	4.41	75.5	4.10	72.1	3.90
		42.2	90.4	5.19	85.5	4.89	81.0	4.59	79.0	4.38	75.5	4.15	72.1	3.87
		52.8	90.4	5.21	85.5	4.91	81.0	4.61	79.0	4.40	75.5	4.09	72.1	3.88
	59	21.2	90.4	4.72	85.5	4.42	81.0	4.11	79.0	3.96	75.5	3.66	72.1	3.50
		42.2	90.4	4.57	85.5	4.27	81.0	3.96	79.0	3.81	75.5	3.66	72.1	3.35
		52.8	90.4	4.57	85.5	4.27	81.0	3.96	79.0	3.81	75.5	3.50	72.1	3.35
	68	21.2	90.4	4.11	85.5	3.81	81.0	3.66	79.0	3.50	75.5	3.35	72.1	3.05
		42.2	90.4	3.96	85.5	3.66	81.0	3.50	79.0	3.35	75.5	3.20	72.1	3.05
		52.8	90.4	3.96	85.5	3.66	81.0	3.50	79.0	3.35	75.5	3.20	72.1	3.05
	77	21.2	90.4	3.66	85.5	3.35	81.0	3.20	79.0	3.05	75.5	2.89	72.1	2.74
		42.2	90.4	3.50	85.5	3.35	81.0	3.05	79.0	3.05	75.5	2.89	72.1	2.74
		52.8	90.4	3.50	85.5	3.35	81.0	3.05	79.0	3.05	75.5	2.89	72.1	2.74
	86	21.2	90.4	3.35	85.5	3.05	81.0	2.89	79.0	2.74	75.5	2.74	72.1	2.59
		42.2	90.4	3.20	85.5	2.89	81.0	2.74	79.0	2.74	75.5	2.59	72.1	2.44
		52.8	90.4	3.20	85.5	2.89	81.0	2.74	79.0	2.74	75.5	2.59	72.1	2.44
	95	21.2	90.4	3.05	85.5	2.74	81.0	2.59	79.0	2.59	75.5	2.44	72.1	2.29
		42.2	90.4	2.89	85.5	2.74	81.0	2.59	79.0	2.44	75.5	2.44	72.1	2.29
		52.8	90.4	2.89	85.5	2.74	81.0	2.59	79.0	2.44	75.5	2.44	72.1	2.29
	104	21.2	90.4	2.74	85.5	2.59	81.0	2.44	79.0	2.29	75.5	2.29	72.1	2.13
		42.2	90.4	2.59	85.5	2.44	81.0	2.29	79.0	2.29	75.5	2.13	72.1	2.13
		52.8	90.4	2.59	85.5	2.44	81.0	2.29	79.0	2.29	75.5	2.13	72.1	2.13
	113	21.2	90.4	2.44	85.5	2.44	81.0	2.29	79.0	1.98	75.5	2.13	72.1	1.98
		42.2	90.4	2.28	85.5	2.13	81.0	1.98	79.0	2.13	75.5	1.83	72.1	1.98
		52.8	90.4	2.28	85.5	2.13	81.0	1.98	79.0	2.13	75.5	1.83	72.1	1.98

TC = Total Heating Capacity (MBh).
PI = Power input (KW).
Power input (KW) includes compressor(s) and controls.
Test condition based on 25 feet of equivalent refrigerant piping and no change in elevation between indoor unit and water source unit.

Due to our policy of continuous product innovation, some specifications may change without notification.
©LG Electronics U.S.A., Inc., Englewood Cliffs, NJ. All rights reserved. "LG" is a registered trademark of LG Corp.

PERFORMANCE DATA

Heating Capacity—ARWB216BA2 / ARWN216BA2 (208/230 Volt)

Table 33a: Heating Capacity ARWB216BA2 / ARWN216BA2

Combination Ratio (%) (Capacity index)	Inlet Water Temperature (°F)	Water Flow Rate (gpm)	Indoor Unit Entering Air Wet Bulb Temperature °F											
			61		65		68		70		72		75	
			TC MBh	PI kW	TC MBh	PI kW	TC MBh	PI kW	TC MBh	PI kW	TC MBh	PI kW	TC MBh	PI kW
130	23	31.8	118.9	14.60	117.9	13.76	117.3	12.83	115.7	12.47	117.1	12.12	114.0	10.87
		63.3	134.6	15.58	133.4	14.79	132.7	13.92	130.9	13.54	132.6	13.16	129.0	11.80
		79.2	148.6	16.57	147.4	15.82	146.6	15.02	144.6	14.60	146.4	14.19	142.5	12.72
	32	31.8	206.7	19.67	201.8	19.07	197.5	18.45	193.2	17.94	193.9	17.43	185.2	15.63
		63.3	211.5	19.87	206.5	19.27	202.1	18.66	197.7	18.15	198.4	17.64	189.5	15.81
		79.2	214.7	19.87	209.7	19.27	205.2	18.66	200.7	18.15	201.4	17.64	192.4	15.81
	41	31.8	296.7	21.18	291.8	20.65	285.3	20.12	278.0	19.57	270.6	19.01	255.7	17.05
		63.3	300.9	21.55	294.0	21.04	285.5	20.54	278.0	19.96	270.6	19.40	255.7	17.40
		79.2	302.6	21.69	294.8	21.18	285.5	20.68	278.0	20.11	270.6	19.54	255.7	17.52
	50	31.8	297.9	19.15	292.7	18.56	285.4	18.23	278.0	17.77	270.6	17.15	255.7	15.48
		63.3	304.9	18.99	298.2	18.62	290.0	18.37	282.5	17.74	274.7	17.12	259.8	15.43
		79.2	306.5	19.26	300.1	18.87	291.8	18.44	284.0	17.81	276.5	17.39	261.3	16.18
	59	31.8	299.1	17.11	293.5	16.47	285.5	16.34	278.0	15.97	270.6	15.29	255.7	13.92
		63.3	308.8	16.43	302.5	16.20	294.4	16.20	287.0	15.52	278.8	14.83	263.9	13.46
		79.2	310.3	16.84	305.4	16.56	298.2	16.20	290.0	15.52	282.5	15.24	266.9	14.83
	68	31.8	310.3	15.74	304.7	15.10	296.7	14.79	288.5	14.37	280.3	14.10	263.9	13.46
		63.3	320.0	15.29	314.4	15.06	305.6	14.74	297.4	14.60	290.0	14.47	273.6	13.01
		79.2	321.5	15.29	316.6	15.06	309.3	14.83	300.4	14.60	292.2	14.47	275.8	13.83
	77	31.8	325.0	15.06	316.8	14.65	309.3	14.37	303.4	14.15	296.7	13.92	279.5	13.01
		63.3	325.0	14.83	316.8	14.56	309.3	14.15	303.4	13.92	296.7	13.69	279.5	12.78
		79.2	325.0	14.60	316.8	14.19	309.3	13.92	303.4	13.69	296.7	13.46	279.5	12.55
	86	31.8	325.0	14.60	316.8	13.96	309.3	13.78	303.4	13.46	296.7	13.23	279.5	12.32
		63.3	325.0	14.15	316.8	13.87	309.3	13.46	303.4	13.23	296.7	12.78	279.5	11.86
		79.2	325.0	13.92	316.8	13.51	309.3	13.23	303.4	13.01	296.7	12.78	279.5	11.86
	95	31.8	325.0	13.92	316.8	13.51	309.3	13.23	303.4	12.78	296.7	12.32	279.5	11.41
		63.3	325.0	13.46	316.8	13.19	309.3	13.01	303.4	12.55	296.7	12.09	279.5	10.95
		79.2	325.0	13.46	316.8	13.05	309.3	12.78	303.4	12.32	296.7	11.86	279.5	10.95
	104	31.8	325.0	13.46	316.8	13.05	309.3	12.78	303.4	12.32	296.7	11.86	279.5	10.72
		63.3	325.0	13.01	316.8	12.73	309.3	12.32	303.4	11.86	296.7	11.41	279.5	10.27
		79.2	325.0	12.78	316.8	12.50	309.3	12.32	303.4	11.86	296.7	11.41	279.5	10.27
	113	31.8	325.0	13.01	316.8	12.59	309.3	12.32	303.4	11.86	296.7	11.41	279.5	10.04
		63.3	325.0	12.55	316.8	12.28	309.3	11.64	303.4	11.18	296.7	10.72	279.5	9.58
		79.2	325.0	12.09	316.8	11.96	309.3	11.86	303.4	11.41	296.7	10.95	279.5	9.58
120	23	31.8	113.0	14.60	112.1	13.76	111.4	12.83	110.1	12.30	111.0	11.94	108.0	10.69
		63.3	127.9	15.58	126.8	14.79	126.1	13.92	124.6	13.34	125.6	12.96	122.2	11.60
		79.2	141.3	16.57	140.1	15.82	139.3	15.02	137.7	14.39	138.8	13.98	135.0	12.51
	32	31.8	196.5	19.67	191.8	19.07	187.7	18.45	183.9	17.68	183.7	17.17	175.5	15.38
		63.3	201.1	19.87	196.3	19.27	192.1	18.66	188.2	17.89	188.0	17.37	179.6	15.55
		79.2	204.1	19.87	199.3	19.27	195.0	18.66	191.1	17.89	190.9	17.37	182.3	15.55
	41	31.8	282.7	21.18	277.7	20.65	271.2	20.12	264.6	19.29	256.4	18.73	242.3	16.77
		63.3	286.6	21.55	279.8	21.04	271.3	20.54	264.6	19.68	256.4	19.11	242.3	17.11
		79.2	288.3	21.69	278.2	21.18	271.3	20.68	264.6	19.82	256.4	19.25	242.3	17.24
	50	31.8	283.8	19.01	278.5	18.49	271.3	18.09	264.6	17.51	256.4	16.90	242.3	15.23
		63.3	289.2	19.27	282.9	18.76	274.3	18.37	267.6	17.60	259.0	16.86	244.9	15.29
		79.2	290.7	19.20	282.0	18.76	275.4	18.44	268.7	17.67	260.1	16.93	246.0	15.81
	59	31.8	285.0	16.84	279.4	16.34	271.3	16.06	264.6	15.74	256.4	15.06	242.3	13.69
		63.3	291.7	16.98	286.1	16.47	277.3	16.20	270.6	15.52	261.6	14.60	247.5	13.46
		79.2	293.2	16.70	285.9	16.34	279.5	16.20	272.8	15.52	263.9	14.60	249.7	14.37
	68	31.8	293.2	15.10	287.6	14.51	278.8	14.15	271.3	13.92	262.4	13.69	248.2	12.96
		63.3	300.6	15.10	294.3	14.74	284.7	14.37	278.0	14.15	269.1	13.64	254.2	12.78
		79.2	302.1	14.97	294.1	14.60	287.0	14.37	279.5	14.15	270.6	13.69	255.7	13.23
	77	31.8	305.6	14.24	296.7	13.60	287.0	13.32	281.0	13.01	273.6	12.78	258.7	11.86
		63.3	306.4	14.01	296.7	13.51	287.0	13.23	281.0	12.78	273.6	12.55	258.7	11.64
		79.2	307.1	13.51	296.7	13.14	287.0	13.01	281.0	12.78	273.6	12.32	258.7	11.64
	86	31.8	307.1	13.55	296.7	12.91	287.0	12.55	281.0	12.09	273.6	11.86	258.7	10.95
		63.3	307.1	13.10	296.7	12.59	287.0	12.32	281.0	11.86	273.6	11.41	258.7	10.72
		79.2	307.1	12.69	296.7	12.32	287.0	12.09	281.0	11.86	273.6	11.41	258.7	10.50
	95	31.8	307.1	12.87	296.7	12.23	287.0	11.86	281.0	11.41	273.6	10.95	258.7	10.04
		63.3	307.1	12.14	296.7	11.77	287.0	11.41	281.0	10.95	273.6	10.50	258.7	9.81
		79.2	307.1	12.00	296.7	11.68	287.0	11.41	281.0	10.95	273.6	10.50	258.7	9.58
	104	31.8	307.1	12.41	296.7	11.64	287.0	11.18	281.0	10.72	273.6	10.27	258.7	9.35
		63.3	307.1	11.45	296.7	11.09	287.0	10.72	281.0	10.27	273.6	9.81	258.7	9.13
		79.2	307.1	11.32	296.7	10.95	287.0	10.72	281.0	10.27	273.6	9.81	258.7	8.90
	113	31.8	307.1	11.96	296.7	11.04	287.0	10.50	281.0	10.04	273.6	9.58	258.7	8.67
		63.3	307.1	10.77	296.7	10.40	287.0	10.04	281.0	9.58	273.6	9.13	258.7	8.44
		79.2	307.1	10.63	296.7	10.22	287.0	10.04	281.0	9.58	273.6	9.13	258.7	8.21

TC = Total Heating Capacity (MBh).
PI = Power input (KW).

Power input (KW) includes compressor(s) and controls.
Test condition based on 25 feet of equivalent refrigerant piping and no change in elevation between indoor unit and water source unit.

Due to our policy of continuous product innovation, some specifications may change without notification.
©LG Electronics U.S.A., Inc., Englewood Cliffs, NJ. All rights reserved. "LG" is a registered trademark of LG Corp.

Table 33b: Heating Capacity ARWB216BA2 / ARWN216BA2

Combination Ratio (%) (Capacity index)	Inlet Water Temperature (°F)	Water Flow Rate (gpm)	Indoor Unit Entering Air Wet Bulb Temperature °F											
			61		65		68		70		72		75	
			TC MBh	PI kW	TC MBh	PI kW	TC MBh	PI kW	TC MBh	PI kW	TC MBh	PI kW	TC MBh	PI kW
110	23	31.8	106.9	14.77	106.2	13.76	105.6	12.83	104.5	12.30	104.6	11.94	102.4	10.69
		63.3	120.9	15.77	120.2	14.79	119.5	13.92	118.3	13.34	118.3	12.96	115.9	11.60
		79.2	133.6	16.78	132.8	15.82	132.0	15.02	130.7	14.39	130.7	13.98	128.0	12.51
	32	31.8	185.7	19.93	181.8	19.07	177.9	18.45	174.5	17.68	173.0	17.17	166.3	15.38
		63.3	190.1	20.12	186.1	19.27	182.1	18.66	178.6	17.89	177.1	17.37	170.2	15.55
		79.2	193.0	20.12	188.9	19.27	184.9	18.66	181.4	17.89	179.8	17.37	172.8	15.55
	41	31.8	270.3	21.46	263.6	20.65	257.0	20.12	251.2	19.29	241.5	18.73	229.6	16.77
		63.3	274.1	21.84	265.6	21.04	257.2	20.54	251.2	19.68	241.5	19.11	229.6	17.11
		79.2	275.6	21.97	266.4	21.18	257.2	20.68	251.2	19.82	241.5	19.25	229.6	17.24
	50	31.8	271.4	19.19	264.4	18.56	257.1	18.16	251.2	17.51	241.5	16.90	229.6	15.23
		63.3	275.5	19.34	267.3	18.76	258.7	18.37	252.7	17.60	243.0	16.86	230.7	15.29
		79.2	277.0	19.34	268.4	18.76	259.4	18.33	253.1	17.55	243.4	16.93	231.4	15.46
	59	31.8	272.5	16.93	265.2	16.47	257.2	16.20	251.2	15.74	241.5	15.06	229.6	13.69
		63.3	277.0	16.84	268.9	16.47	260.1	16.20	254.2	15.52	244.5	14.60	231.8	13.46
		79.2	278.5	16.70	270.4	16.34	261.6	15.97	254.9	15.29	245.2	14.60	233.3	13.69
	68	31.8	277.7	14.65	269.7	14.28	260.9	13.92	254.2	13.69	244.5	13.23	231.8	12.41
		63.3	283.7	14.79	273.4	14.28	263.9	13.92	257.9	13.69	247.5	13.01	235.5	12.32
		79.2	285.2	14.79	275.6	14.28	265.4	13.92	258.7	13.46	249.0	13.01	236.3	12.32
	77	31.8	285.5	13.28	276.5	12.78	265.4	12.55	259.4	12.09	250.5	11.64	237.0	10.72
		63.3	287.7	13.19	276.5	12.55	265.4	12.32	259.4	11.86	250.5	11.41	237.0	10.72
		79.2	289.2	13.19	276.5	12.59	265.4	12.09	259.4	11.86	250.5	11.18	237.0	10.50
	86	31.8	289.2	12.09	276.5	11.64	265.4	11.18	259.4	10.95	250.5	10.27	237.0	9.58
		63.3	289.2	11.86	276.5	11.41	265.4	10.95	259.4	10.72	250.5	10.04	237.0	9.35
		79.2	289.2	11.77	276.5	11.18	265.4	10.72	259.4	10.50	250.5	10.04	237.0	9.35
	95	31.8	289.2	11.41	276.5	10.72	265.4	10.27	259.4	9.81	250.5	9.35	237.0	8.67
		63.3	289.2	10.95	276.5	10.50	265.4	10.04	259.4	9.58	250.5	9.13	237.0	8.44
		79.2	289.2	10.68	276.5	10.27	265.4	9.81	259.4	9.58	250.5	9.13	237.0	8.44
	104	31.8	289.2	10.72	276.5	10.27	265.4	9.58	259.4	9.13	250.5	8.67	237.0	7.99
		63.3	289.2	10.27	276.5	9.81	265.4	9.13	259.4	8.90	250.5	8.44	237.0	7.76
		79.2	289.2	10.13	276.5	9.58	265.4	9.13	259.4	8.67	250.5	8.21	237.0	7.53
	113	31.8	289.2	10.04	276.5	9.81	265.4	8.90	259.4	8.44	250.5	7.99	237.0	7.30
		63.3	289.2	9.58	276.5	9.13	265.4	8.21	259.4	8.21	250.5	7.76	237.0	7.07
		79.2	289.2	9.58	276.5	8.90	265.4	8.44	259.4	7.76	250.5	7.30	237.0	6.62
100	23	31.8	101.0	14.77	100.4	13.94	99.8	12.83	99.0	12.30	98.1	11.76	96.4	10.69
		63.3	114.3	15.77	113.6	14.99	112.9	13.92	112.0	13.34	111.0	12.76	109.1	11.60
		79.2	126.2	16.78	125.5	16.03	124.8	15.02	123.7	14.39	122.6	13.76	120.5	12.51
	32	31.8	175.5	19.93	171.8	19.33	168.1	18.45	165.2	17.68	162.3	16.91	156.6	15.38
		63.3	179.6	20.12	175.8	19.53	172.0	18.66	169.1	17.89	166.2	17.11	160.3	15.55
		79.2	182.4	20.12	178.5	19.53	174.7	18.66	171.7	17.89	168.7	17.11	162.7	15.55
	41	31.8	258.7	21.46	249.6	20.93	242.9	20.12	237.8	19.29	226.6	18.45	216.2	16.77
		63.3	262.2	21.84	251.4	21.32	243.0	20.54	237.8	19.68	226.6	18.82	216.2	17.11
		79.2	263.7	21.97	252.2	21.46	243.0	20.68	237.8	19.82	226.6	18.96	216.2	17.24
	50	31.8	259.7	19.19	250.3	18.75	242.9	18.16	237.8	17.51	226.6	16.64	216.2	15.23
		63.3	262.2	19.54	251.6	18.97	243.0	18.37	237.8	17.60	226.6	16.71	216.2	15.29
		79.2	264.1	19.47	252.7	18.97	243.0	18.33	237.8	17.55	226.6	16.67	216.2	15.23
	59	31.8	260.8	16.93	251.0	16.56	243.0	16.20	237.8	15.74	226.6	14.83	216.2	13.69
		63.3	262.2	17.25	251.8	16.61	243.0	16.20	237.8	15.52	226.6	14.60	216.2	13.46
		79.2	264.5	16.98	253.3	16.47	243.0	15.97	237.8	15.29	226.6	14.37	216.2	13.23
	68	31.8	263.0	14.47	252.5	14.06	243.0	13.69	237.8	13.46	226.6	12.55	216.2	11.86
		63.3	266.7	14.74	253.3	14.10	243.0	13.69	237.8	13.23	226.6	12.32	216.2	11.41
		79.2	268.2	14.47	255.5	13.96	243.0	13.46	237.8	13.01	226.6	12.09	216.2	11.18
	77	31.8	266.1	12.59	256.4	12.14	243.0	11.64	237.8	11.18	226.6	10.50	216.2	9.58
		63.3	269.8	12.64	256.4	11.86	243.0	11.41	237.8	10.95	226.6	10.27	216.2	9.58
		79.2	271.3	12.37	256.4	11.77	243.0	11.18	237.8	10.72	226.6	10.27	216.2	9.35
	86	31.8	271.3	11.41	256.4	10.50	243.0	9.81	237.8	9.58	226.6	8.90	216.2	8.44
		63.3	271.3	11.18	256.4	10.27	243.0	9.72	237.8	9.35	226.6	8.90	216.2	8.21
		79.2	271.3	10.95	256.4	10.27	243.0	9.58	237.8	9.35	226.6	8.67	216.2	8.21
	95	31.8	271.3	10.50	256.4	9.58	243.0	8.67	237.8	8.44	226.6	7.99	216.2	7.30
		63.3	271.3	10.04	256.4	9.13	243.0	8.58	237.8	8.21	226.6	7.76	216.2	7.07
		79.2	271.3	10.04	256.4	9.13	243.0	8.44	237.8	8.21	226.6	7.76	216.2	7.07
	104	31.8	271.3	9.81	256.4	8.90	243.0	7.76	237.8	7.53	226.6	7.07	216.2	6.62
		63.3	271.3	9.35	256.4	8.44	243.0	7.67	237.8	7.30	226.6	6.85	216.2	6.39
		79.2	271.3	9.13	256.4	8.44	243.0	7.53	237.8	7.30	226.6	6.85	216.2	6.39
	113	31.8	271.3	9.13	256.4	8.21	243.0	6.85	237.8	6.62	226.6	6.16	216.2	5.93
		63.3	271.3	8.67	256.4	7.76	243.0	6.75	237.8	6.39	226.6	5.93	216.2	5.70
		79.2	271.3	8.21	256.4	7.76	243.0	6.62	237.8	6.39	226.6	5.93	216.2	5.70

TC = Total Heating Capacity (MBh).
PI = Power input (KW).

Power input (KW) includes compressor(s) and controls.
Test condition based on 25 feet of equivalent refrigerant piping and no change in elevation between indoor unit and water source unit.

Due to our policy of continuous product innovation, some specifications may change without notification.
©LG Electronics U.S.A., Inc., Englewood Cliffs, NJ. All rights reserved. "LG" is a registered trademark of LG Corp.

PERFORMANCE DATA

Heating Capacity—ARWB216BA2 / ARWN216BA2 (208/230 Volt)

Table 33c: Heating Capacity ARWB216BA2 / ARWN216BA2

Combination Ratio (%) (Capacity index)	Inlet Water Temperature (°F)	Water Flow Rate (gpm)	Indoor Unit Entering Air Wet Bulb Temperature °F											
			61		65		68		70		72		75	
			TC MBh	PI kW	TC MBh	PI kW	TC MBh	PI kW	TC MBh	PI kW	TC MBh	PI kW	TC MBh	PI kW
90	23	31.8	95.4	13.72	92.4	12.51	89.7	11.02	89.0	10.51	88.4	10.13	86.8	9.09
		63.3	108.0	14.63	104.6	13.44	101.5	11.96	100.7	11.41	100.1	11.00	98.2	9.86
		79.2	119.3	15.54	115.5	14.36	112.1	12.90	111.3	12.30	110.5	11.86	108.5	10.64
	32	31.8	165.9	18.41	158.2	17.28	151.1	15.85	148.7	15.12	146.3	14.57	140.9	13.07
		63.3	169.8	18.59	161.9	17.46	154.6	16.04	152.1	15.29	149.8	14.74	144.2	13.22
		79.2	172.3	18.59	164.3	17.46	157.0	16.04	154.5	15.29	152.0	14.74	146.4	13.22
	41	31.8	233.2	19.81	225.4	18.69	218.3	17.29	213.9	16.49	204.2	15.89	194.5	14.25
		63.3	234.2	20.15	224.7	19.04	218.4	17.64	213.9	16.83	204.2	16.22	194.5	14.55
		79.2	235.6	20.27	225.4	19.17	218.4	17.77	213.9	16.95	204.2	16.33	194.5	14.65
	50	31.8	234.2	17.41	226.1	16.58	218.3	15.60	213.9	14.98	204.2	14.34	194.5	12.95
		63.3	233.8	17.47	224.9	16.64	218.4	15.67	213.9	15.03	204.2	14.27	194.5	12.98
		79.2	235.3	17.42	225.6	16.59	218.4	15.62	213.9	14.98	204.2	14.33	194.5	13.03
	59	31.8	235.2	15.01	226.8	14.47	218.4	13.92	213.9	13.46	204.2	12.78	194.5	11.64
		63.3	233.5	14.79	225.1	14.24	218.4	13.69	213.9	13.23	204.2	12.32	194.5	11.41
		79.2	235.0	14.56	225.9	14.01	218.4	13.46	213.9	13.01	204.2	12.32	194.5	11.41
	68	31.8	236.7	12.73	227.5	12.32	218.4	11.86	213.9	11.41	204.2	10.95	194.5	10.27
		63.3	235.7	12.73	225.9	12.18	218.4	11.64	213.9	11.18	204.2	10.50	194.5	9.81
		79.2	236.5	12.50	226.6	12.09	218.4	11.64	213.9	11.18	204.2	10.50	194.5	9.81
	77	31.8	241.5	11.09	231.1	10.50	218.4	10.04	213.9	9.58	204.2	9.13	194.5	8.44
		63.3	243.7	11.00	231.1	10.40	218.4	9.81	213.9	9.58	204.2	8.90	194.5	8.21
		79.2	244.5	10.72	231.1	10.18	218.4	9.81	213.9	9.35	204.2	8.90	194.5	8.21
	86	31.8	244.5	10.04	231.1	9.35	218.4	8.67	213.9	8.44	204.2	7.99	194.5	7.30
		63.3	244.5	9.81	231.1	9.13	218.4	8.44	213.9	8.21	204.2	7.76	194.5	7.30
		79.2	244.5	9.58	231.1	8.90	218.4	8.44	213.9	8.21	204.2	7.76	194.5	7.07
	95	31.8	244.5	9.13	231.1	8.44	218.4	7.76	213.9	7.53	204.2	7.07	194.5	6.62
		63.3	244.5	8.90	231.1	8.21	218.4	7.53	213.9	7.30	204.2	6.85	194.5	6.39
		79.2	244.5	8.67	231.1	7.99	218.4	7.30	213.9	7.07	204.2	6.85	194.5	6.39
	104	31.8	244.5	8.44	231.1	7.76	218.4	6.85	213.9	6.62	204.2	6.39	194.5	5.93
		63.3	244.5	7.99	231.1	7.53	218.4	6.62	213.9	6.39	204.2	6.16	194.5	5.70
		79.2	244.5	7.99	231.1	7.53	218.4	6.62	213.9	6.39	204.2	6.16	194.5	5.70
	113	31.8	244.5	7.76	231.1	7.07	218.4	5.93	213.9	5.70	204.2	5.70	194.5	5.25
		63.3	244.5	7.07	231.1	6.85	218.4	5.70	213.9	5.48	204.2	5.48	194.5	5.02
		79.2	244.5	7.30	231.1	7.07	218.4	5.93	213.9	5.70	204.2	5.48	194.5	5.02
80	23	31.8	90.2	9.83	84.4	9.44	79.9	9.04	79.1	8.73	78.7	8.32	77.1	7.66
		63.3	102.1	10.67	95.5	10.25	90.4	9.81	89.5	9.48	89.1	9.03	87.3	8.32
		79.2	112.7	11.50	105.5	11.05	99.9	10.57	98.9	10.22	98.4	9.74	96.4	8.97
	32	31.8	156.7	14.14	144.5	13.58	134.6	12.99	132.1	12.56	130.3	11.97	125.3	11.02
		63.3	160.4	14.30	147.9	13.74	137.7	13.14	135.2	12.70	133.4	12.11	128.2	11.15
		79.2	162.9	14.30	150.1	13.74	139.8	13.14	137.2	12.70	135.4	12.11	130.2	11.15
	41	31.8	215.8	15.42	203.8	14.81	194.4	14.17	190.1	13.70	181.9	13.06	172.9	12.02
		63.3	217.7	15.73	205.3	15.12	194.5	14.46	190.1	13.98	181.9	13.32	172.9	12.26
		79.2	217.7	15.85	205.0	15.23	194.5	14.57	190.1	14.08	181.9	13.42	172.9	12.35
	50	31.8	216.7	14.10	204.4	13.45	194.5	12.79	190.1	12.44	181.9	11.78	172.9	10.91
		63.3	217.7	14.03	205.1	13.38	194.5	12.82	190.1	12.46	181.9	11.79	172.9	10.92
		79.2	217.7	13.97	205.0	13.43	194.5	12.87	190.1	12.40	181.9	11.73	172.9	10.85
	59	31.8	217.7	12.78	205.0	12.09	194.5	11.41	190.1	11.18	181.9	10.50	172.9	9.81
		63.3	217.7	12.32	205.0	11.64	194.5	11.18	190.1	10.95	181.9	10.27	172.9	9.58
		79.2	217.7	12.09	205.0	11.64	194.5	11.18	190.1	10.72	181.9	10.04	172.9	9.35
	68	31.8	217.7	10.72	205.0	10.27	194.5	9.81	190.1	9.58	181.9	9.13	172.9	8.44
		63.3	217.7	10.50	205.0	10.04	194.5	9.81	190.1	9.35	181.9	8.90	172.9	8.21
		79.2	217.7	10.27	205.0	9.81	194.5	9.58	190.1	9.35	181.9	8.67	172.9	8.21
	77	31.8	217.7	9.58	205.0	8.90	194.5	8.44	190.1	8.21	181.9	7.76	172.9	7.30
		63.3	217.7	9.35	205.0	8.67	194.5	8.44	190.1	7.99	181.9	7.53	172.9	7.07
		79.2	217.7	9.13	205.0	8.67	194.5	8.21	190.1	7.99	181.9	7.53	172.9	7.07
	86	31.8	217.7	8.44	205.0	7.99	194.5	7.53	190.1	7.30	181.9	6.85	172.9	6.39
		63.3	217.7	8.21	205.0	7.76	194.5	7.30	190.1	7.07	181.9	6.62	172.9	6.16
		79.2	217.7	8.21	205.0	7.76	194.5	7.30	190.1	7.07	181.9	6.62	172.9	6.16
	95	31.8	217.7	7.76	205.0	7.30	194.5	6.62	190.1	6.39	181.9	6.16	172.9	5.70
		63.3	217.7	7.53	205.0	7.07	194.5	6.39	190.1	6.39	181.9	5.93	172.9	5.70
		79.2	217.7	7.53	205.0	6.85	194.5	6.39	190.1	6.16	181.9	5.93	172.9	5.48
	104	31.8	217.7	7.30	205.0	6.62	194.5	5.93	190.1	5.93	181.9	5.48	172.9	5.25
		63.3	217.7	6.85	205.0	6.39	194.5	5.93	190.1	5.70	181.9	5.48	172.9	5.02
		79.2	217.7	6.85	205.0	6.39	194.5	5.70	190.1	5.70	181.9	5.48	172.9	5.02
	113	31.8	217.7	6.84	205.0	5.93	194.5	5.25	190.1	5.48	181.9	4.79	172.9	4.79
		63.3	217.7	6.16	205.0	5.70	194.5	5.48	190.1	5.02	181.9	5.02	172.9	4.34
		79.2	217.7	6.16	205.0	5.93	194.5	5.02	190.1	5.25	181.9	5.02	172.9	4.56

TC = Total Heating Capacity (MBh).
PI = Power input (KW).

Power input (KW) includes compressor(s) and controls.
Test condition based on 25 feet of equivalent refrigerant piping and no change in elevation between indoor unit and water source unit.

Due to our policy of continuous product innovation, some specifications may change without notification.
©LG Electronics U.S.A., Inc., Englewood Cliffs, NJ. All rights reserved. "LG" is a registered trademark of LG Corp.

Table 33d: Heating Capacity ARWB216BA2 / ARWN216BA2

Combination Ratio (%) (Capacity index)	Inlet Water Temperature (°F)	Water Flow Rate (gpm)	Indoor Unit Entering Air Wet Bulb Temperature °F											
			61		65		68		70		72		75	
			TC MBh	PI kW	TC MBh	PI kW	TC MBh	PI kW	TC MBh	PI kW	TC MBh	PI kW	TC MBh	PI kW
70	23	31.8	78.8	8.43	74.0	8.02	69.8	7.77	69.2	7.31	68.7	7.06	67.5	6.42
		63.3	89.1	9.14	83.7	8.70	79.0	8.43	78.3	7.93	77.8	7.66	76.4	6.96
		79.2	98.4	9.86	92.5	9.39	87.3	9.09	86.5	8.55	85.9	8.26	84.4	7.51
	32	31.8	136.9	12.12	126.6	11.53	117.6	11.17	115.5	10.51	113.8	10.15	109.6	9.23
		63.3	140.1	12.26	129.6	11.66	120.3	11.30	118.2	10.63	116.4	10.27	112.2	9.33
		79.2	142.2	12.26	131.6	11.66	122.2	11.30	120.0	10.63	118.2	10.27	113.9	9.33
	41	31.8	188.5	13.22	178.6	12.58	169.9	12.19	166.2	11.46	158.8	11.07	151.3	10.06
		63.3	190.1	13.49	179.9	12.83	170.0	12.44	166.2	11.69	158.8	11.29	151.3	10.27
		79.2	190.1	13.58	179.6	12.93	170.0	12.53	166.2	11.78	158.8	11.38	151.3	10.34
	50	31.8	189.3	12.08	179.1	11.42	169.9	11.00	166.2	10.41	158.8	9.98	151.3	9.14
		63.3	190.1	11.99	179.8	11.32	170.0	10.90	166.2	10.41	158.8	9.98	151.3	9.13
		79.2	190.1	12.04	179.6	11.37	170.0	10.94	166.2	10.45	158.8	9.91	151.3	9.16
	59	31.8	190.1	10.95	179.6	10.27	170.0	9.81	166.2	9.35	158.8	8.90	151.3	8.21
		63.3	190.1	10.50	179.6	9.81	170.0	9.35	166.2	9.13	158.8	8.67	151.3	7.99
		79.2	190.1	10.50	179.6	9.81	170.0	9.35	166.2	9.13	158.8	8.44	151.3	7.99
	68	31.8	190.1	9.13	179.6	8.67	170.0	8.44	166.2	8.21	158.8	7.76	151.3	7.30
		63.3	190.1	8.90	179.6	8.44	170.0	8.21	166.2	7.99	158.8	7.53	151.3	7.07
		79.2	190.1	8.90	179.6	8.44	170.0	8.21	166.2	7.76	158.8	7.53	151.3	6.85
	77	31.8	190.1	8.21	179.6	7.76	170.0	7.30	166.2	7.07	158.8	6.62	151.3	6.16
		63.3	190.1	7.99	179.6	7.53	170.0	7.07	166.2	6.85	158.8	6.62	151.3	6.16
		79.2	190.1	7.76	179.6	7.30	170.0	7.07	166.2	6.85	158.8	6.39	151.3	6.16
	86	31.8	190.1	7.30	179.6	6.85	170.0	6.39	166.2	6.16	158.8	5.93	151.3	5.48
		63.3	190.1	7.07	179.6	6.62	170.0	6.16	166.2	6.16	158.8	5.70	151.3	5.48
		79.2	190.1	7.07	179.6	6.62	170.0	6.16	166.2	5.93	158.8	5.70	151.3	5.48
	95	31.8	190.1	6.62	179.6	6.16	170.0	5.70	166.2	5.70	158.8	5.25	151.3	5.02
		63.3	190.1	6.39	179.6	5.93	170.0	5.70	166.2	5.48	158.8	5.25	151.3	4.79
		79.2	190.1	6.39	179.6	5.93	170.0	5.48	166.2	5.48	158.8	5.25	151.3	4.79
	104	31.8	190.1	6.16	179.6	5.70	170.0	5.25	166.2	5.02	158.8	4.79	151.3	4.56
		63.3	190.1	5.93	179.6	5.48	170.0	5.02	166.2	5.02	158.8	4.79	151.3	4.34
		79.2	190.1	5.93	179.6	5.48	170.0	5.02	166.2	4.79	158.8	4.56	151.3	4.34
	113	31.8	190.1	5.70	179.6	5.25	170.0	4.79	166.2	4.34	158.8	4.34	151.3	4.11
		63.3	190.1	5.48	179.6	5.02	170.0	4.34	166.2	4.56	158.8	4.34	151.3	3.88
		79.2	190.1	5.48	179.6	5.02	170.0	4.56	166.2	4.11	158.8	3.88	151.3	3.88
60	23	31.8	67.6	6.85	63.3	6.59	60.0	6.32	59.3	5.88	59.1	5.79	57.8	5.17
		63.3	76.5	7.43	71.6	7.15	67.9	6.86	67.0	6.38	66.8	6.28	65.4	5.61
		79.2	84.6	8.01	79.1	7.72	75.0	7.40	74.1	6.88	73.8	6.78	72.3	6.05
	32	31.8	117.6	9.85	108.2	9.48	101.1	9.10	98.9	8.46	97.7	8.33	94.0	7.43
		63.3	120.3	9.96	110.8	9.59	103.4	9.20	101.2	8.55	100.0	8.42	96.2	7.52
		79.2	122.1	9.96	112.5	9.59	105.0	9.20	102.8	8.55	101.5	8.42	97.6	7.52
	41	31.8	161.9	10.74	152.6	10.34	146.0	9.92	142.4	9.22	136.4	9.08	129.7	8.11
		63.3	163.2	10.96	153.8	10.55	146.1	10.12	142.4	9.41	136.4	9.27	129.7	8.27
		79.2	163.2	11.04	153.6	10.63	146.1	10.20	142.4	9.48	136.4	9.33	129.7	8.33
	50	31.8	162.6	9.82	153.1	9.39	146.1	8.95	142.4	8.38	136.4	8.19	129.7	7.36
		63.3	163.2	9.81	153.7	9.38	146.1	8.94	142.4	8.47	136.4	8.17	129.7	7.44
		79.2	163.2	9.85	153.6	9.31	146.1	8.86	142.4	8.39	136.4	8.09	129.7	7.36
	59	31.8	163.2	8.90	153.6	8.44	146.1	7.99	142.4	7.53	136.4	7.30	129.7	6.62
		63.3	163.2	8.67	153.6	8.21	146.1	7.76	142.4	7.53	136.4	7.07	129.7	6.62
		79.2	163.2	8.67	153.6	7.99	146.1	7.53	142.4	7.30	136.4	6.85	129.7	6.39
	68	31.8	163.2	7.76	153.6	7.30	146.1	6.85	142.4	6.62	136.4	6.39	129.7	5.93
		63.3	163.2	7.53	153.6	7.07	146.1	6.62	142.4	6.39	136.4	6.16	129.7	5.70
		79.2	163.2	7.53	153.6	7.07	146.1	6.62	142.4	6.39	136.4	6.16	129.7	5.70
	77	31.8	163.2	6.85	153.6	6.39	146.1	5.93	142.4	5.93	136.4	5.48	129.7	5.25
		63.3	163.2	6.62	153.6	6.16	146.1	5.93	142.4	5.70	136.4	5.48	129.7	5.02
		79.2	163.2	6.62	153.6	6.16	146.1	5.70	142.4	5.70	136.4	5.48	129.7	5.02
	86	31.8	163.2	6.16	153.6	5.70	146.1	5.48	142.4	5.25	136.4	5.02	129.7	4.79
		63.3	163.2	5.93	153.6	5.48	146.1	5.25	142.4	5.02	136.4	4.79	129.7	4.56
		79.2	163.2	5.93	153.6	5.48	146.1	5.25	142.4	5.02	136.4	4.79	129.7	4.56
	95	31.8	163.2	5.48	153.6	5.25	146.1	4.79	142.4	4.79	136.4	4.56	129.7	4.34
		63.3	163.2	5.48	153.6	5.02	146.1	4.79	142.4	4.56	136.4	4.34	129.7	4.11
		79.2	163.2	5.48	153.6	5.02	146.1	4.56	142.4	4.56	136.4	4.34	129.7	4.11
	104	31.8	163.2	5.02	153.6	4.79	146.1	4.34	142.4	4.34	136.4	4.11	129.7	3.88
		63.3	163.2	5.02	153.6	4.56	146.1	4.34	142.4	4.11	136.4	3.88	129.7	3.88
		79.2	163.2	5.02	153.6	4.56	146.1	4.34	142.4	4.11	136.4	3.88	129.7	3.88
	113	31.8	163.2	4.56	153.6	4.34	146.1	3.88	142.4	3.88	136.4	3.65	129.7	3.42
		63.3	163.2	4.56	153.6	4.11	146.1	3.88	142.4	3.65	136.4	3.42	129.7	3.65
		79.2	163.2	4.56	153.6	4.11	146.1	4.11	142.4	3.65	136.4	3.42	129.7	3.65

TC = Total Heating Capacity (MBh).
PI = Power input (KW).

Power input (KW) includes compressor(s) and controls.
Test condition based on 25 feet of equivalent refrigerant piping and no change in elevation between indoor unit and water source unit.

LG

Due to our policy of continuous product innovation, some specifications may change without notification.
©LG Electronics U.S.A., Inc., Englewood Cliffs, NJ. All rights reserved. "LG" is a registered trademark of LG Corp.

PERFORMANCE DATA

Heating Capacity—ARWB216BA2 / ARWN216BA2 (208/230 Volt)

Table 33e: Heating Capacity ARWB216BA2 / ARWN216BA2

Combination Ratio (%) (Capacity index)	Inlet Water Temperature (°F)	Water Flow Rate (gpm)	Indoor Unit Entering Air Wet Bulb Temperature °F											
			61		65		68		70		72		75	
			TC	PI	TC	PI	TC	PI	TC	PI	TC	PI	TC	PI
			MBh	kW	MBh	kW	MBh	kW	MBh	kW	MBh	kW	MBh	kW
50	23	31.8	56.2	5.44	52.8	5.17	49.9	4.88	49.3	4.63	49.1	4.34	48.2	4.10
		63.3	63.6	5.91	59.8	5.61	56.5	5.29	55.8	5.03	55.5	4.71	54.5	4.45
		79.2	70.3	6.37	66.0	6.05	62.4	5.71	61.7	5.42	61.3	5.08	60.3	4.80
	32	31.8	97.7	7.83	90.4	7.43	84.1	7.02	82.4	6.66	81.2	6.24	78.3	5.89
		63.3	100.0	7.92	92.5	7.52	86.0	7.10	84.3	6.74	83.1	6.32	80.1	5.96
		79.2	101.5	7.92	93.9	7.52	87.3	7.10	85.6	6.74	84.3	6.32	81.4	5.96
	41	31.8	134.5	8.54	127.4	8.11	121.4	7.65	118.5	7.27	113.3	6.81	108.1	6.43
		63.3	135.7	8.71	128.4	8.27	121.5	7.81	118.5	7.42	113.3	6.95	108.1	6.56
		79.2	135.7	8.77	128.2	8.33	121.5	7.87	118.5	7.47	113.3	7.00	108.1	6.61
	50	31.8	135.1	7.80	127.8	7.36	121.5	6.91	118.5	6.60	113.3	6.14	108.1	5.84
		63.3	135.7	7.78	128.3	7.33	121.5	6.87	118.5	6.56	113.3	6.21	108.1	5.79
		79.2	135.7	7.81	128.2	7.36	121.5	6.90	118.5	6.59	113.3	6.12	108.1	5.81
	59	31.8	135.7	7.07	128.2	6.62	121.5	6.16	118.5	5.93	113.3	5.48	108.1	5.25
		63.3	135.7	6.85	128.2	6.39	121.5	5.93	118.5	5.70	113.3	5.48	108.1	5.02
		79.2	135.7	6.85	128.2	6.39	121.5	5.93	118.5	5.70	113.3	5.25	108.1	5.02
	68	31.8	135.7	6.16	128.2	5.70	121.5	5.48	118.5	5.25	113.3	5.02	108.1	4.56
		63.3	135.7	5.93	128.2	5.48	121.5	5.25	118.5	5.02	113.3	4.79	108.1	4.56
		79.2	135.7	5.93	128.2	5.48	121.5	5.25	118.5	5.02	113.3	4.79	108.1	4.56
	77	31.8	135.7	5.48	128.2	5.02	121.5	4.79	118.5	4.56	113.3	4.34	108.1	4.11
		63.3	135.7	5.25	128.2	5.02	121.5	4.56	118.5	4.56	113.3	4.34	108.1	4.11
		79.2	135.7	5.25	128.2	5.02	121.5	4.56	118.5	4.56	113.3	4.34	108.1	4.11
	86	31.8	135.7	5.02	128.2	4.56	121.5	4.34	118.5	4.11	113.3	4.11	108.1	3.88
		63.3	135.7	4.79	128.2	4.34	121.5	4.11	118.5	4.11	113.3	3.88	108.1	3.65
		79.2	135.7	4.79	128.2	4.34	121.5	4.11	118.5	4.11	113.3	3.88	108.1	3.65
	95	31.8	135.7	4.56	128.2	4.11	121.5	3.88	118.5	3.88	113.3	3.65	108.1	3.42
		63.3	135.7	4.34	128.2	4.11	121.5	3.88	118.5	3.65	113.3	3.65	108.1	3.42
		79.2	135.7	4.34	128.2	4.11	121.5	3.88	118.5	3.65	113.3	3.65	108.1	3.42
	104	31.8	135.7	4.11	128.2	3.88	121.5	3.65	118.5	3.42	113.3	3.42	108.1	3.19
		63.3	135.7	3.88	128.2	3.65	121.5	3.42	118.5	3.42	113.3	3.19	108.1	3.19
		79.2	135.7	3.88	128.2	3.65	121.5	3.42	118.5	3.42	113.3	3.19	108.1	3.19
	113	31.8	135.7	3.65	128.2	3.65	121.5	3.42	118.5	2.97	113.3	3.19	108.1	2.97
		63.3	135.7	3.42	128.2	3.19	121.5	2.97	118.5	3.19	113.3	2.74	108.1	2.97
		79.2	135.7	3.42	128.2	3.19	121.5	2.97	118.5	3.19	113.3	2.74	108.1	2.97

TC = Total Heating Capacity (MBh).
PI = Power input (KW).
Power input (KW) includes compressor(s) and controls.
Test condition based on 25 feet of equivalent refrigerant piping and no change in elevation between indoor unit and water source unit.

Due to our policy of continuous product innovation, some specifications may change without notification.
©LG Electronics U.S.A., Inc., Englewood Cliffs, NJ. All rights reserved. "LG" is a registered trademark of LG Corp.

Table 34a: Heating Capacity ARWB288BA2 / ARWN288BA2

Combination Ratio (%) (Capacity index)	Inlet Water Temperature (°F)	Water Flow Rate (gpm)	Indoor Unit Entering Air Wet Bulb Temperature °F											
			61		65		68		70		72		75	
			TC MBh	PI kW	TC MBh	PI kW	TC MBh	PI kW	TC MBh	PI kW	TC MBh	PI kW	TC MBh	PI kW
130	23	42.4	158.5	19.49	157.2	18.37	156.3	17.13	154.3	16.66	156.2	16.19	152.0	14.52
		84.4	179.4	20.81	177.9	19.75	176.9	18.59	174.6	18.08	176.7	17.57	172.0	15.75
		105.6	198.2	22.13	196.5	21.13	195.4	20.05	192.9	19.49	195.2	18.95	190.0	16.99
	32	42.4	275.5	26.27	269.0	25.46	263.3	24.64	257.6	23.95	258.5	23.28	246.9	20.87
		84.4	282.0	26.53	275.3	25.73	269.5	24.92	263.6	24.23	264.5	23.55	252.7	21.11
		105.6	286.3	26.53	279.5	25.73	273.6	24.92	267.7	24.23	268.6	23.55	256.6	21.11
	41	42.4	395.6	28.29	389.1	27.57	380.5	26.87	370.7	26.13	360.8	25.39	340.9	22.77
		84.4	401.2	28.78	391.9	28.09	380.7	27.42	370.7	26.66	360.8	25.91	340.9	23.23
		105.6	403.5	28.96	393.1	28.28	380.7	27.62	370.7	26.85	360.8	26.10	340.9	23.40
	50	42.4	397.2	25.57	390.2	24.78	380.6	24.34	370.7	23.73	360.8	22.90	340.9	20.68
		84.4	406.5	25.36	397.6	24.86	386.6	24.53	376.7	23.69	366.2	22.86	346.4	20.60
		105.6	408.6	25.72	400.2	25.20	389.1	24.62	378.7	23.78	368.7	23.22	348.4	21.60
	59	42.4	398.8	22.85	391.4	22.00	380.7	21.81	370.7	21.33	360.8	20.41	340.9	18.58
		84.4	411.8	21.94	403.3	21.63	392.6	21.63	382.6	20.72	371.7	19.80	351.8	17.98
		105.6	413.7	22.48	407.3	22.12	397.5	21.63	386.6	20.72	376.7	20.35	355.8	19.80
	68	42.4	413.7	21.02	406.3	20.17	395.6	19.74	384.6	19.19	373.7	18.83	351.8	17.98
		84.4	426.7	20.41	419.2	20.11	407.5	19.68	396.6	19.50	386.6	19.32	364.7	17.37
		105.6	428.7	20.41	422.2	20.11	412.5	19.80	400.5	19.50	389.6	19.32	367.7	18.46
	77	42.4	433.3	20.11	422.4	19.56	412.5	19.19	404.5	18.89	395.6	18.58	372.7	17.37
		84.4	433.3	19.80	422.4	19.44	412.5	18.89	404.5	18.58	395.6	18.28	372.7	17.06
		105.6	433.3	19.50	422.4	18.95	412.5	18.58	404.5	18.28	395.6	17.98	372.7	16.76
	86	42.4	433.3	19.50	422.4	18.65	412.5	18.40	404.5	17.98	395.6	17.67	372.7	16.45
		84.4	433.3	18.89	422.4	18.52	412.5	17.98	404.5	17.67	395.6	17.06	372.7	15.84
		105.6	433.3	18.58	422.4	18.04	412.5	17.67	404.5	17.37	395.6	17.06	372.7	15.84
	95	42.4	433.3	18.58	422.4	18.04	412.5	17.67	404.5	17.06	395.6	16.45	372.7	15.23
		84.4	433.3	17.98	422.4	17.61	412.5	17.37	404.5	16.76	395.6	16.15	372.7	14.62
		105.6	433.3	17.98	422.4	17.43	412.5	17.06	404.5	16.45	395.6	15.84	372.7	14.62
	104	42.4	433.3	17.98	422.4	17.43	412.5	17.06	404.5	16.45	395.6	15.84	372.7	14.32
		84.4	433.3	17.37	422.4	17.00	412.5	16.45	404.5	15.84	395.6	15.23	372.7	13.71
		105.6	433.3	17.06	422.4	16.70	412.5	16.45	404.5	15.84	395.6	15.23	372.7	13.71
	113	42.4	433.3	17.37	422.4	16.82	412.5	16.45	404.5	15.84	395.6	15.23	372.7	13.41
		84.4	433.3	16.76	422.4	16.39	412.5	15.54	404.5	14.93	395.6	14.32	372.7	12.80
		105.6	433.3	16.15	422.4	15.96	412.5	15.84	404.5	15.23	395.6	14.62	372.7	12.80
120	23	42.4	150.7	19.49	149.4	18.37	148.6	17.13	146.8	16.42	148.0	15.95	144.0	14.28
		84.4	170.6	20.81	169.1	19.75	168.1	18.59	166.2	17.82	167.5	17.30	163.0	15.49
		105.6	188.4	22.13	186.8	21.13	185.7	20.05	183.5	19.22	185.0	18.66	180.1	16.71
	32	42.4	262.0	26.27	255.7	25.46	250.3	24.64	245.2	23.61	244.9	22.93	234.0	20.53
		84.4	268.1	26.53	261.7	25.73	256.1	24.92	250.9	23.88	250.7	23.20	239.5	20.77
		105.6	272.2	26.53	265.7	25.73	260.0	24.92	254.7	23.88	254.5	23.20	243.1	20.77
	41	42.4	376.9	28.29	370.3	27.57	361.6	26.87	352.8	25.75	341.9	25.01	323.0	22.39
		84.4	382.2	28.78	373.0	28.09	361.8	27.42	352.8	26.28	341.9	25.52	323.0	22.85
		105.6	384.4	28.96	370.9	28.28	361.8	27.62	352.8	26.47	341.9	25.71	323.0	23.02
	50	42.4	378.4	25.39	371.4	24.69	361.7	24.16	352.8	23.39	341.9	22.56	323.0	20.34
		84.4	385.5	25.72	377.2	25.04	365.7	24.53	356.8	23.50	345.4	22.51	326.5	20.41
		105.6	387.6	25.63	376.0	25.05	367.2	24.62	358.3	23.59	346.9	22.60	328.0	21.10
	59	42.4	380.0	22.48	372.5	21.81	361.8	21.45	352.8	21.02	341.9	20.11	323.0	18.28
		84.4	388.9	22.67	381.4	22.00	369.7	21.63	360.8	20.72	348.8	19.50	330.0	17.98
		105.6	390.9	22.30	381.2	21.81	372.7	21.63	363.8	20.72	351.8	19.50	332.9	19.19
	68	42.4	390.9	20.17	383.4	19.38	371.7	18.89	361.8	18.58	349.8	18.28	331.0	17.31
		84.4	400.8	20.17	392.4	19.68	379.7	19.19	370.7	18.89	358.8	18.22	338.9	17.06
		105.6	402.8	19.99	392.1	19.50	382.6	19.19	372.7	18.89	360.8	18.28	340.9	17.67
	77	42.4	407.5	19.01	395.6	18.16	382.6	17.79	374.7	17.37	364.7	17.06	344.9	15.84
		84.4	408.5	18.71	395.6	18.04	382.6	17.67	374.7	17.06	364.7	16.76	344.9	15.54
		105.6	409.5	18.04	395.6	17.55	382.6	17.37	374.7	17.06	364.7	16.45	344.9	15.54
	86	42.4	409.5	18.10	395.6	17.24	382.6	16.76	374.7	16.15	364.7	15.84	344.9	14.62
		84.4	409.5	17.49	395.6	16.82	382.6	16.45	374.7	15.84	364.7	15.23	344.9	14.32
		105.6	409.5	16.94	395.6	16.45	382.6	16.15	374.7	15.84	364.7	15.23	344.9	14.01
	95	42.4	409.5	17.18	395.6	16.33	382.6	15.84	374.7	15.23	364.7	14.62	344.9	13.41
		84.4	409.5	16.21	395.6	15.72	382.6	15.23	374.7	14.62	364.7	14.01	344.9	13.10
		105.6	409.5	16.03	395.6	15.60	382.6	15.23	374.7	14.62	364.7	14.01	344.9	12.80
	104	42.4	409.5	16.57	395.6	15.54	382.6	14.93	374.7	14.32	364.7	13.71	344.9	12.49
		84.4	409.5	15.29	395.6	14.81	382.6	14.32	374.7	13.71	364.7	13.10	344.9	12.19
		105.6	409.5	15.11	395.6	14.62	382.6	14.32	374.7	13.71	364.7	13.10	344.9	11.88
	113	42.4	409.5	15.96	395.6	14.75	382.6	14.01	374.7	13.41	364.7	12.80	344.9	11.58
		84.4	409.5	14.38	395.6	13.89	382.6	13.41	374.7	12.80	364.7	12.19	344.9	11.27
		105.6	409.5	14.20	395.6	13.65	382.6	13.41	374.7	12.80	364.7	12.19	344.9	10.97

TC = Total Heating Capacity (MBh).
PI = Power input (KW).

Power input (KW) includes compressor(s) and controls.
Test condition based on 25 feet of equivalent refrigerant piping and no change in elevation between indoor unit and water source unit.

LG

Due to our policy of continuous product innovation, some specifications may change without notification.
©LG Electronics U.S.A., Inc., Englewood Cliffs, NJ. All rights reserved. "LG" is a registered trademark of LG Corp.

PERFORMANCE DATA

Heating Capacity—ARWB288BA2 / ARWN288BA2 (208/230 Volt)

Table 34b: Heating Capacity ARWB288BA2 / ARWN288BA2

Combination Ratio (%) (Capacity index)	Inlet Water Temperature (°F)	Water Flow Rate (gpm)	Indoor Unit Entering Air Wet Bulb Temperature °F											
			61		65		68		70		72		75	
			TC	PI	TC	PI	TC	PI	TC	PI	TC	PI	TC	PI
			MBh	kW	MBh	kW	MBh	kW	MBh	kW	MBh	kW	MBh	kW
110	23	42.4	142.5	19.73	141.6	18.37	140.8	17.13	139.4	16.42	139.4	15.95	136.5	14.28
		84.4	161.2	21.06	160.3	19.75	159.4	18.59	157.7	17.82	157.8	17.30	154.5	15.49
		105.6	178.1	22.40	177.1	21.13	176.1	20.05	174.2	19.22	174.3	18.66	170.6	16.71
	32	42.4	247.6	26.61	242.4	25.46	237.2	24.64	232.7	23.61	230.7	22.93	221.7	20.53
		84.4	253.4	26.87	248.1	25.73	242.8	24.92	238.2	23.88	236.1	23.20	226.9	20.77
		105.6	257.3	26.87	251.9	25.73	246.5	24.92	241.8	23.88	239.7	23.20	230.4	20.77
	41	42.4	360.4	28.65	351.5	27.57	342.7	26.87	334.9	25.75	322.0	25.01	306.1	22.39
		84.4	365.4	29.16	354.1	28.09	342.9	27.42	334.9	26.28	322.0	25.52	306.1	22.85
		105.6	367.5	29.34	355.2	28.28	342.9	27.62	334.9	26.47	322.0	25.71	306.1	23.02
	50	42.4	361.9	25.63	352.6	24.78	342.8	24.25	334.9	23.39	322.0	22.56	306.1	20.34
		84.4	367.3	25.82	356.3	25.04	344.9	24.53	336.9	23.50	324.0	22.51	307.6	20.41
		105.6	369.4	25.82	357.9	25.05	345.9	24.47	337.4	23.44	324.5	22.60	308.6	20.65
	59	42.4	363.3	22.61	353.6	22.00	342.9	21.63	334.9	21.02	322.0	20.11	306.1	18.28
		84.4	369.3	22.48	358.6	22.00	346.9	21.63	338.9	20.72	326.0	19.50	309.1	17.98
		105.6	371.3	22.30	360.6	21.81	348.8	21.33	339.9	20.41	327.0	19.50	311.1	18.28
	68	42.4	370.3	19.56	359.6	19.07	347.9	18.58	338.9	18.28	326.0	17.67	309.1	16.57
		84.4	378.2	19.74	364.5	19.07	351.8	18.58	343.9	18.28	330.0	17.37	314.1	16.45
		105.6	380.2	19.74	367.5	19.07	353.8	18.58	344.9	17.98	332.0	17.37	315.1	16.45
	77	42.4	380.7	17.73	368.7	17.06	353.8	16.76	345.9	16.15	333.9	15.54	316.0	14.32
		84.4	383.6	17.61	368.7	16.76	353.8	16.45	345.9	15.84	333.9	15.23	316.0	14.32
		105.6	385.6	17.61	368.7	16.82	353.8	16.15	345.9	15.84	333.9	14.93	316.0	14.01
	86	42.4	385.6	16.15	368.7	15.54	353.8	14.93	345.9	14.62	333.9	13.71	316.0	12.80
		84.4	385.6	15.84	368.7	15.23	353.8	14.62	345.9	14.32	333.9	13.41	316.0	12.49
		105.6	385.6	15.72	368.7	14.93	353.8	14.32	345.9	14.01	333.9	13.41	316.0	12.49
	95	42.4	385.6	15.23	368.7	14.32	353.8	13.71	345.9	13.10	333.9	12.49	316.0	11.58
		84.4	385.6	14.62	368.7	14.01	353.8	13.41	345.9	12.80	333.9	12.19	316.0	11.27
		105.6	385.6	14.26	368.7	13.71	353.8	13.10	345.9	12.80	333.9	12.19	316.0	11.27
	104	42.4	385.6	14.32	368.7	13.71	353.8	12.80	345.9	12.19	333.9	11.58	316.0	10.66
		84.4	385.6	13.71	368.7	13.10	353.8	12.19	345.9	11.88	333.9	11.27	316.0	10.36
		105.6	385.6	13.53	368.7	12.80	353.8	12.19	345.9	11.58	333.9	10.97	316.0	10.05
	113	42.4	385.6	13.41	368.7	13.10	353.8	11.88	345.9	11.27	333.9	10.66	316.0	9.75
		84.4	385.6	12.80	368.7	12.19	353.8	10.97	345.9	10.97	333.9	10.36	316.0	9.44
		105.6	385.6	12.80	368.7	11.88	353.8	11.27	345.9	10.36	333.9	9.75	316.0	8.84
100	23	42.4	134.7	19.73	133.9	18.61	133.1	17.13	131.9	16.42	130.8	15.70	128.5	14.28
		84.4	152.4	21.06	151.5	20.01	150.6	18.59	149.3	17.82	148.0	17.04	145.4	15.49
		105.6	168.3	22.40	167.3	21.41	166.4	20.05	164.9	19.22	163.5	18.38	160.7	16.71
	32	42.4	234.0	26.61	229.1	25.80	224.1	24.64	220.3	23.61	216.5	22.58	208.8	20.53
		84.4	239.5	26.87	234.5	26.08	229.4	24.92	225.5	23.88	221.5	22.84	213.7	20.77
		105.6	243.2	26.87	238.0	26.08	232.9	24.92	228.9	23.88	224.9	22.84	216.9	20.77
	41	42.4	344.9	28.65	332.8	27.95	323.8	26.87	317.0	25.75	302.1	24.63	288.2	22.39
		84.4	349.7	29.16	335.2	28.47	324.0	27.42	317.0	26.28	302.1	25.14	288.2	22.85
		105.6	351.7	29.34	336.2	28.66	324.0	27.62	317.0	26.47	302.1	25.32	288.2	23.02
	50	42.4	346.3	25.63	333.7	25.03	323.9	24.25	317.0	23.39	302.1	22.22	288.2	20.34
		84.4	349.7	26.09	335.5	25.33	324.0	24.53	317.0	23.50	302.1	22.32	288.2	20.41
		105.6	352.1	26.00	337.0	25.33	324.0	24.47	317.0	23.44	302.1	22.26	288.2	20.34
	59	42.4	347.7	22.61	334.7	22.12	324.0	21.63	317.0	21.02	302.1	19.80	288.2	18.28
		84.4	349.7	23.03	335.7	22.18	324.0	21.63	317.0	20.72	302.1	19.50	288.2	17.98
		105.6	352.6	22.67	337.7	22.00	324.0	21.33	317.0	20.41	302.1	19.19	288.2	17.67
	68	42.4	350.7	19.32	336.7	18.77	324.0	18.28	317.0	17.98	302.1	16.76	288.2	15.84
		84.4	355.6	19.68	337.7	18.83	324.0	18.28	317.0	17.67	302.1	16.45	288.2	15.23
		105.6	357.6	19.32	340.7	18.65	324.0	17.98	317.0	17.37	302.1	16.15	288.2	14.93
	77	42.4	354.8	16.82	341.9	16.21	324.0	15.54	317.0	14.93	302.1	14.01	288.2	12.80
		84.4	359.8	16.88	341.9	15.84	324.0	15.23	317.0	14.62	302.1	13.71	288.2	12.80
		105.6	361.8	16.51	341.9	15.72	324.0	14.93	317.0	14.32	302.1	13.71	288.2	12.49
	86	42.4	361.8	15.23	341.9	14.01	324.0	13.10	317.0	12.80	302.1	11.88	288.2	11.27
		84.4	361.8	14.93	341.9	13.71	324.0	12.98	317.0	12.49	302.1	11.88	288.2	10.97
		105.6	361.8	14.62	341.9	13.71	324.0	12.80	317.0	12.49	302.1	11.58	288.2	10.97
	95	42.4	361.8	14.01	341.9	12.80	324.0	11.58	317.0	11.27	302.1	10.66	288.2	9.75
		84.4	361.8	13.41	341.9	12.19	324.0	11.46	317.0	10.97	302.1	10.36	288.2	9.44
		105.6	361.8	13.41	341.9	12.19	324.0	11.27	317.0	10.97	302.1	10.36	288.2	9.44
	104	42.4	361.8	13.10	341.9	11.88	324.0	10.36	317.0	10.05	302.1	9.44	288.2	8.84
		84.4	361.8	12.49	341.9	11.27	324.0	10.24	317.0	9.75	302.1	9.14	288.2	8.53
		105.6	361.8	12.19	341.9	11.27	324.0	10.05	317.0	9.75	302.1	9.14	288.2	8.53
	113	42.4	361.8	12.19	341.9	10.97	324.0	9.14	317.0	8.84	302.1	8.23	288.2	7.92
		84.4	361.8	11.58	341.9	10.36	324.0	9.02	317.0	8.53	302.1	7.92	288.2	7.62
		105.6	361.8	10.97	341.9	10.36	324.0	8.84	317.0	8.53	302.1	7.92	288.2	7.62

TC = Total Heating Capacity (MBh).
PI = Power input (KW).

Power input (KW) includes compressor(s) and controls.
Test condition based on 25 feet of equivalent refrigerant piping and no change in elevation between indoor unit and water source unit.

Due to our policy of continuous product innovation, some specifications may change without notification.
©LG Electronics U.S.A., Inc., Englewood Cliffs, NJ. All rights reserved. "LG" is a registered trademark of LG Corp.

Table 34c: Heating Capacity ARWB288BA2 / ARWN288BA2

Combination Ratio (%) (Capacity index)	Inlet Water Temperature (°F)	Water Flow Rate (gpm)	Indoor Unit Entering Air Wet Bulb Temperature °F											
			61		65		68		70		72		75	
			TC MBh	PI kW	TC MBh	PI kW	TC MBh	PI kW	TC MBh	PI kW	TC MBh	PI kW	TC MBh	PI kW
90	23	42.4	127.2	18.32	123.2	16.71	119.6	14.72	118.7	14.04	117.9	13.53	115.7	12.14
		84.4	144.0	19.54	139.4	17.94	135.3	15.97	134.3	15.23	133.4	14.68	130.9	13.17
		105.6	159.1	20.76	154.0	19.18	149.5	17.23	148.4	16.43	147.4	15.84	144.6	14.20
	32	42.4	221.2	24.58	210.9	23.07	201.4	21.17	198.2	20.19	195.1	19.46	187.9	17.45
		84.4	226.3	24.82	215.8	23.31	206.2	21.41	202.8	20.42	199.7	19.68	192.3	17.65
		105.6	229.8	24.82	219.1	23.31	209.3	21.41	205.9	20.42	202.7	19.68	195.3	17.65
	41	42.4	311.0	26.45	300.6	24.96	291.1	23.09	285.2	22.02	272.3	21.22	259.4	19.03
		84.4	312.2	26.91	299.6	25.42	291.2	23.56	285.2	22.47	272.3	21.65	259.4	19.42
		105.6	314.1	27.07	300.5	25.59	291.2	23.73	285.2	22.63	272.3	21.81	259.4	19.56
	50	42.4	312.3	23.25	301.5	22.14	291.1	20.84	285.2	20.00	272.3	19.14	259.4	17.29
		84.4	311.8	23.32	299.9	22.22	291.2	20.92	285.2	20.07	272.3	19.05	259.4	17.33
		105.6	313.7	23.25	300.8	22.15	291.2	20.85	285.2	20.00	272.3	19.13	259.4	17.40
	59	42.4	313.6	20.05	302.4	19.32	291.2	18.58	285.2	17.98	272.3	17.06	259.4	15.54
		84.4	311.3	19.74	300.1	19.01	291.2	18.28	285.2	17.67	272.3	16.45	259.4	15.23
		105.6	313.3	19.44	301.1	18.71	291.2	17.98	285.2	17.37	272.3	16.45	259.4	15.23
	68	42.4	315.6	17.00	303.4	16.45	291.2	15.84	285.2	15.23	272.3	14.62	259.4	13.71
		84.4	314.3	17.00	301.1	16.27	291.2	15.54	285.2	14.93	272.3	14.01	259.4	13.10
		105.6	315.3	16.70	302.1	16.15	291.2	15.54	285.2	14.93	272.3	14.01	259.4	13.10
	77	42.4	322.0	14.81	308.1	14.01	291.2	13.41	285.2	12.80	272.3	12.19	259.4	11.27
		84.4	325.0	14.68	308.1	13.89	291.2	13.10	285.2	12.80	272.3	11.88	259.4	10.97
		105.6	326.0	14.32	308.1	13.59	291.2	13.10	285.2	12.49	272.3	11.88	259.4	10.97
	86	42.4	326.0	13.41	308.1	12.49	291.2	11.58	285.2	11.27	272.3	10.66	259.4	9.75
		84.4	326.0	13.10	308.1	12.19	291.2	11.27	285.2	10.97	272.3	10.36	259.4	9.75
		105.6	326.0	12.80	308.1	11.88	291.2	11.27	285.2	10.97	272.3	10.36	259.4	9.44
	95	42.4	326.0	12.19	308.1	11.27	291.2	10.36	285.2	10.05	272.3	9.44	259.4	8.84
		84.4	326.0	11.88	308.1	10.97	291.2	10.05	285.2	9.75	272.3	9.14	259.4	8.53
		105.6	326.0	11.58	308.1	10.66	291.2	9.75	285.2	9.44	272.3	9.14	259.4	8.53
	104	42.4	326.0	11.27	308.1	10.36	291.2	9.14	285.2	8.84	272.3	8.53	259.4	7.92
		84.4	326.0	10.66	308.1	10.05	291.2	8.84	285.2	8.53	272.3	8.23	259.4	7.62
		105.6	326.0	10.66	308.1	10.05	291.2	8.84	285.2	8.53	272.3	8.23	259.4	7.62
	113	42.4	326.0	10.36	308.1	9.44	291.2	7.92	285.2	7.62	272.3	7.62	259.4	7.01
		84.4	326.0	9.44	308.1	9.14	291.2	7.62	285.2	7.31	272.3	7.31	259.4	6.70
		105.6	326.0	9.75	308.1	9.44	291.2	7.92	285.2	7.62	272.3	7.31	259.4	6.70
80	23	42.4	120.2	13.13	112.6	12.61	106.5	12.07	105.5	11.66	105.0	11.11	102.8	10.23
		84.4	136.1	14.24	127.4	13.69	120.6	13.09	119.3	12.65	118.8	12.06	116.4	11.10
		105.6	150.3	15.36	140.7	14.76	133.2	14.12	131.8	13.65	131.2	13.01	128.5	11.97
	32	42.4	209.0	18.88	192.7	18.14	179.4	17.35	176.1	16.77	173.7	15.98	167.0	14.71
		84.4	213.9	19.09	197.2	18.35	183.6	17.55	180.2	16.96	177.8	16.17	170.9	14.88
		105.6	217.2	19.09	200.2	18.35	186.5	17.55	183.0	16.96	180.5	16.17	173.6	14.88
	41	42.4	287.8	20.59	271.7	19.78	259.3	18.92	253.4	18.29	242.5	17.43	230.6	16.05
		84.4	290.2	21.01	273.7	20.18	259.4	19.31	253.4	18.66	242.5	17.79	230.6	16.38
		105.6	290.2	21.16	273.3	20.33	259.4	19.45	253.4	18.80	242.5	17.92	230.6	16.49
	50	42.4	289.0	18.82	272.5	17.96	259.3	17.08	253.4	16.61	242.5	15.72	230.6	14.57
		84.4	290.2	18.73	273.5	17.86	259.4	17.12	253.4	16.64	242.5	15.75	230.6	14.59
		105.6	290.2	18.65	273.3	17.93	259.4	17.19	253.4	16.56	242.5	15.66	230.6	14.49
	59	42.4	290.2	17.06	273.3	16.15	259.4	15.23	253.4	14.93	242.5	14.01	230.6	13.10
		84.4	290.2	16.45	273.3	15.54	259.4	14.93	253.4	14.62	242.5	13.71	230.6	12.80
		105.6	290.2	16.15	273.3	15.54	259.4	14.93	253.4	14.32	242.5	13.41	230.6	12.49
	68	42.4	290.2	14.32	273.3	13.71	259.4	13.10	253.4	12.80	242.5	12.19	230.6	11.27
		84.4	290.2	14.01	273.3	13.41	259.4	13.10	253.4	12.49	242.5	11.88	230.6	10.97
		105.6	290.2	13.71	273.3	13.10	259.4	12.80	253.4	12.49	242.5	11.58	230.6	10.97
	77	42.4	290.2	12.80	273.3	11.88	259.4	11.27	253.4	10.97	242.5	10.36	230.6	9.75
		84.4	290.2	12.49	273.3	11.58	259.4	11.27	253.4	10.66	242.5	10.05	230.6	9.44
		105.6	290.2	12.19	273.3	11.58	259.4	10.97	253.4	10.66	242.5	10.05	230.6	9.44
	86	42.4	290.2	11.27	273.3	10.66	259.4	10.05	253.4	9.75	242.5	9.14	230.6	8.53
		84.4	290.2	10.97	273.3	10.36	259.4	9.75	253.4	9.44	242.5	8.84	230.6	8.23
		105.6	290.2	10.97	273.3	10.36	259.4	9.75	253.4	9.44	242.5	8.84	230.6	8.23
	95	42.4	290.2	10.36	273.3	9.75	259.4	8.84	253.4	8.53	242.5	8.23	230.6	7.62
		84.4	290.2	10.05	273.3	9.44	259.4	8.53	253.4	8.53	242.5	7.92	230.6	7.62
		105.6	290.2	10.05	273.3	9.14	259.4	8.53	253.4	8.23	242.5	7.92	230.6	7.31
	104	42.4	290.2	9.75	273.3	8.84	259.4	7.92	253.4	7.92	242.5	7.31	230.6	7.01
		84.4	290.2	9.14	273.3	8.53	259.4	7.92	253.4	7.62	242.5	7.31	230.6	6.70
		105.6	290.2	9.14	273.3	8.53	259.4	7.62	253.4	7.62	242.5	7.31	230.6	6.70
	113	42.4	290.2	9.14	273.3	7.92	259.4	7.01	253.4	7.31	242.5	6.40	230.6	6.40
		84.4	290.2	8.23	273.3	7.62	259.4	7.31	253.4	6.70	242.5	6.70	230.6	5.79
		105.6	290.2	8.23	273.3	7.92	259.4	6.70	253.4	7.01	242.5	6.70	230.6	6.09

TC = Total Heating Capacity (MBh).
PI = Power input (KW).

Power input (KW) includes compressor(s) and controls.
Test condition based on 25 feet of equivalent refrigerant piping and no change in elevation between indoor unit and water source unit.

LG

Due to our policy of continuous product innovation, some specifications may change without notification.
©LG Electronics U.S.A., Inc., Englewood Cliffs, NJ. All rights reserved. "LG" is a registered trademark of LG Corp.

PERFORMANCE DATA

Heating Capacity—ARWB288BA2 / ARWN288BA2 (208/230 Volt)

Table 34d: Heating Capacity ARWB288BA2 / ARWN288BA2

Combination Ratio (%) (Capacity index)	Inlet Water Temperature (°F)	Water Flow Rate (gpm)	Indoor Unit Entering Air Wet Bulb Temperature °F											
			61		65		68		70		72		75	
			TC MBh	PI kW	TC MBh	PI kW	TC MBh	PI kW	TC MBh	PI kW	TC MBh	PI kW	TC MBh	PI kW
70	23	42.4	105.0	11.25	98.7	10.71	93.1	10.38	92.2	9.76	91.6	9.42	90.0	8.57
		84.4	118.8	12.21	111.6	11.62	105.3	11.26	104.4	10.59	103.7	10.23	101.8	9.30
		105.6	131.3	13.17	123.3	12.53	116.3	12.14	115.3	11.42	114.6	11.03	112.5	10.03
	32	42.4	182.5	16.18	168.8	15.40	156.8	14.92	154.0	14.03	151.7	13.55	146.2	12.32
		84.4	186.8	16.37	172.8	15.58	160.4	15.09	157.6	14.19	155.2	13.71	149.6	12.46
		105.6	189.6	16.37	175.4	15.58	162.9	15.09	160.0	14.19	157.6	13.71	151.9	12.46
	41	42.4	251.3	17.65	238.1	16.79	226.5	16.27	221.6	15.30	211.7	14.78	201.8	13.44
		84.4	253.4	18.01	239.9	17.14	226.6	16.61	221.6	15.61	211.7	15.08	201.8	13.71
		105.6	253.4	18.14	239.5	17.26	226.6	16.73	221.6	15.73	211.7	15.19	201.8	13.81
	50	42.4	252.4	16.14	238.8	15.25	226.5	14.69	221.6	13.90	211.7	13.33	201.8	12.20
		84.4	253.4	16.01	239.7	15.12	226.6	14.55	221.6	13.90	211.7	13.33	201.8	12.19
		105.6	253.4	16.08	239.5	15.18	226.6	14.61	221.6	13.96	211.7	13.23	201.8	12.24
	59	42.4	253.4	14.62	239.5	13.71	226.6	13.10	221.6	12.49	211.7	11.88	201.8	10.97
		84.4	253.4	14.01	239.5	13.10	226.6	12.49	221.6	12.19	211.7	11.58	201.8	10.66
		105.6	253.4	14.01	239.5	13.10	226.6	12.49	221.6	12.19	211.7	11.27	201.8	10.66
	68	42.4	253.4	12.19	239.5	11.58	226.6	11.27	221.6	10.97	211.7	10.36	201.8	9.75
		84.4	253.4	11.88	239.5	11.27	226.6	10.97	221.6	10.66	211.7	10.05	201.8	9.44
		105.6	253.4	11.88	239.5	11.27	226.6	10.97	221.6	10.36	211.7	10.05	201.8	9.14
	77	42.4	253.4	10.97	239.5	10.36	226.6	9.75	221.6	9.44	211.7	8.84	201.8	8.23
		84.4	253.4	10.66	239.5	10.05	226.6	9.44	221.6	9.14	211.7	8.84	201.8	8.23
		105.6	253.4	10.36	239.5	9.75	226.6	9.44	221.6	9.14	211.7	8.53	201.8	8.23
	86	42.4	253.4	9.75	239.5	9.14	226.6	8.53	221.6	8.23	211.7	7.92	201.8	7.31
		84.4	253.4	9.44	239.5	8.84	226.6	8.23	221.6	8.23	211.7	7.62	201.8	7.31
		105.6	253.4	9.44	239.5	8.84	226.6	8.23	221.6	7.92	211.7	7.62	201.8	7.31
	95	42.4	253.4	8.84	239.5	8.23	226.6	7.62	221.6	7.62	211.7	7.01	201.8	6.70
		84.4	253.4	8.53	239.5	7.92	226.6	7.62	221.6	7.31	211.7	7.01	201.8	6.40
		105.6	253.4	8.53	239.5	7.92	226.6	7.31	221.6	7.31	211.7	7.01	201.8	6.40
	104	42.4	253.4	8.23	239.5	7.62	226.6	7.01	221.6	6.70	211.7	6.40	201.8	6.09
		84.4	253.4	7.92	239.5	7.31	226.6	6.70	221.6	6.70	211.7	6.40	201.8	5.79
		105.6	253.4	7.92	239.5	7.31	226.6	6.70	221.6	6.40	211.7	6.09	201.8	5.79
	113	42.4	253.4	7.62	239.5	7.01	226.6	6.40	221.6	5.79	211.7	5.79	201.8	5.48
		84.4	253.4	7.31	239.5	6.70	226.6	5.79	221.6	6.09	211.7	5.79	201.8	5.18
		105.6	253.4	7.31	239.5	6.70	226.6	6.09	221.6	5.48	211.7	5.18	201.8	5.18
60	23	42.4	90.2	9.14	84.3	8.80	80.0	8.45	79.0	7.85	78.7	7.73	77.1	6.90
		84.4	102.1	9.92	95.4	9.55	90.5	9.16	89.4	8.52	89.1	8.39	87.3	7.49
		105.6	112.7	10.70	105.4	10.30	100.0	9.88	98.8	9.19	98.4	9.05	96.4	8.08
	32	42.4	156.7	13.15	144.3	12.66	134.8	12.15	131.9	11.29	130.3	11.12	125.3	9.92
		84.4	160.4	13.30	147.7	12.81	137.9	12.29	135.0	11.42	133.4	11.25	128.2	10.04
		105.6	162.9	13.30	150.0	12.81	140.0	12.29	137.1	11.42	135.4	11.25	130.2	10.04
	41	42.4	215.8	14.34	203.5	13.81	194.7	13.25	189.8	12.32	181.9	12.13	172.9	10.82
		84.4	217.7	14.63	205.0	14.09	194.8	13.52	189.8	12.57	181.9	12.37	172.9	11.04
		105.6	217.7	14.74	204.7	14.19	194.8	13.61	189.8	12.66	181.9	12.46	172.9	11.12
	50	42.4	216.7	13.11	204.1	12.54	194.7	11.95	189.8	11.19	181.9	10.94	172.9	9.83
		84.4	217.7	13.10	204.9	12.53	194.8	11.94	189.8	11.31	181.9	10.91	172.9	9.94
		105.6	217.7	13.16	204.7	12.43	194.8	11.83	189.8	11.20	181.9	10.80	172.9	9.83
	59	42.4	217.7	11.88	204.7	11.27	194.8	10.66	189.8	10.05	181.9	9.75	172.9	8.84
		84.4	217.7	11.58	204.7	10.97	194.8	10.36	189.8	10.05	181.9	9.44	172.9	8.84
		105.6	217.7	11.58	204.7	10.66	194.8	10.05	189.8	9.75	181.9	9.14	172.9	8.53
	68	42.4	217.7	10.36	204.7	9.75	194.8	9.14	189.8	8.84	181.9	8.53	172.9	7.92
		84.4	217.7	10.05	204.7	9.44	194.8	8.84	189.8	8.53	181.9	8.23	172.9	7.62
		105.6	217.7	10.05	204.7	9.44	194.8	8.84	189.8	8.53	181.9	8.23	172.9	7.62
	77	42.4	217.7	9.14	204.7	8.53	194.8	7.92	189.8	7.92	181.9	7.31	172.9	7.01
		84.4	217.7	8.84	204.7	8.23	194.8	7.92	189.8	7.62	181.9	7.31	172.9	6.70
		105.6	217.7	8.84	204.7	8.23	194.8	7.62	189.8	7.62	181.9	7.31	172.9	6.70
	86	42.4	217.7	8.23	204.7	7.62	194.8	7.31	189.8	7.01	181.9	6.70	172.9	6.40
		84.4	217.7	7.92	204.7	7.31	194.8	7.01	189.8	6.70	181.9	6.40	172.9	6.09
		105.6	217.7	7.92	204.7	7.31	194.8	7.01	189.8	6.70	181.9	6.40	172.9	6.09
	95	42.4	217.7	7.31	204.7	7.01	194.8	6.40	189.8	6.40	181.9	6.09	172.9	5.79
		84.4	217.7	7.31	204.7	6.70	194.8	6.40	189.8	6.09	181.9	5.79	172.9	5.48
		105.6	217.7	7.31	204.7	6.70	194.8	6.09	189.8	6.09	181.9	5.79	172.9	5.48
	104	42.4	217.7	6.70	204.7	6.40	194.8	5.79	189.8	5.79	181.9	5.48	172.9	5.18
		84.4	217.7	6.70	204.7	6.09	194.8	5.79	189.8	5.48	181.9	5.18	172.9	5.18
		105.6	217.7	6.70	204.7	6.09	194.8	5.79	189.8	5.48	181.9	5.18	172.9	5.18
	113	42.4	217.7	6.09	204.7	5.79	194.8	5.18	189.8	5.18	181.9	4.87	172.9	4.57
		84.4	217.7	6.09	204.7	5.48	194.8	5.18	189.8	4.87	181.9	4.57	172.9	4.87
		105.6	217.7	6.09	204.7	5.48	194.8	5.48	189.8	4.87	181.9	4.57	172.9	4.87

TC = Total Heating Capacity (MBh).
PI = Power input (KW).

Power input (KW) includes compressor(s) and controls.
Test condition based on 25 feet of equivalent refrigerant piping and no change in elevation between indoor unit and water source unit.

Due to our policy of continuous product innovation, some specifications may change without notification.
©LG Electronics U.S.A., Inc., Englewood Cliffs, NJ. All rights reserved. "LG" is a registered trademark of LG Corp.

PERFORMANCE DATA

Heating Capacity—ARWB288BA2 / ARWN288BA2 (208/230 Volt)

Table 34e: Heating Capacity ARWB288BA2 / ARWN288BA2

Combination Ratio (%) (Capacity index)	Inlet Water Temperature (°F)	Water Flow Rate (gpm)	Indoor Unit Entering Air Wet Bulb Temperature °F											
			61		65		68		70		72		75	
			TC	PI	TC	PI	TC	PI	TC	PI	TC	PI	TC	PI
			MBh	kW	MBh	kW	MBh	kW	MBh	kW	MBh	kW	MBh	kW
50	23	42.4	74.9	7.27	70.4	6.90	66.5	6.52	65.8	6.19	65.4	5.80	64.3	5.47
		84.4	84.8	7.89	79.7	7.49	75.3	7.07	74.4	6.71	74.0	6.29	72.7	5.94
		105.6	93.7	8.50	88.0	8.08	83.2	7.62	82.2	7.24	81.8	6.79	80.3	6.41
	32	42.4	130.3	10.45	120.5	9.92	112.1	9.37	109.8	8.90	108.2	8.34	104.4	7.87
		84.4	133.3	10.57	123.3	10.04	114.7	9.48	112.4	9.00	110.8	8.44	106.8	7.96
		105.6	135.4	10.57	125.2	10.04	116.4	9.48	114.1	9.00	112.5	8.44	108.5	7.96
	41	42.4	179.4	11.40	169.9	10.82	161.9	10.22	158.0	9.70	151.1	9.10	144.1	8.58
		84.4	180.9	11.63	171.2	11.04	162.0	10.43	158.0	9.90	151.1	9.28	144.1	8.76
		105.6	180.9	11.71	170.9	11.12	162.0	10.50	158.0	9.97	151.1	9.35	144.1	8.82
	50	42.4	180.1	10.42	170.4	9.83	162.0	9.22	158.0	8.81	151.1	8.20	144.1	7.80
		84.4	180.9	10.38	171.1	9.79	162.0	9.17	158.0	8.76	151.1	8.30	144.1	7.73
		105.6	180.9	10.43	170.9	9.83	162.0	9.21	158.0	8.79	151.1	8.18	144.1	7.76
	59	42.4	180.9	9.44	170.9	8.84	162.0	8.23	158.0	7.92	151.1	7.31	144.1	7.01
		84.4	180.9	9.14	170.9	8.53	162.0	7.92	158.0	7.62	151.1	7.31	144.1	6.70
		105.6	180.9	9.14	170.9	8.53	162.0	7.92	158.0	7.62	151.1	7.01	144.1	6.70
	68	42.4	180.9	8.23	170.9	7.62	162.0	7.31	158.0	7.01	151.1	6.70	144.1	6.09
		84.4	180.9	7.92	170.9	7.31	162.0	7.01	158.0	6.70	151.1	6.40	144.1	6.09
		105.6	180.9	7.92	170.9	7.31	162.0	7.01	158.0	6.70	151.1	6.40	144.1	6.09
	77	42.4	180.9	7.31	170.9	6.70	162.0	6.40	158.0	6.09	151.1	5.79	144.1	5.48
		84.4	180.9	7.01	170.9	6.70	162.0	6.09	158.0	6.09	151.1	5.79	144.1	5.48
		105.6	180.9	7.01	170.9	6.70	162.0	6.09	158.0	6.09	151.1	5.79	144.1	5.48
	86	42.4	180.9	6.70	170.9	6.09	162.0	5.79	158.0	5.48	151.1	5.48	144.1	5.18
		84.4	180.9	6.40	170.9	5.79	162.0	5.48	158.0	5.48	151.1	5.18	144.1	4.87
		105.6	180.9	6.40	170.9	5.79	162.0	5.48	158.0	5.48	151.1	5.18	144.1	4.87
	95	42.4	180.9	6.09	170.9	5.48	162.0	5.18	158.0	5.18	151.1	4.87	144.1	4.57
		84.4	180.9	5.79	170.9	5.48	162.0	5.18	158.0	4.87	151.1	4.87	144.1	4.57
		105.6	180.9	5.79	170.9	5.48	162.0	5.18	158.0	4.87	151.1	4.87	144.1	4.57
	104	42.4	180.9	5.48	170.9	5.18	162.0	4.87	158.0	4.57	151.1	4.57	144.1	4.27
		84.4	180.9	5.18	170.9	4.87	162.0	4.57	158.0	4.57	151.1	4.27	144.1	4.27
		105.6	180.9	5.18	170.9	4.87	162.0	4.57	158.0	4.57	151.1	4.27	144.1	4.27
	113	42.4	180.9	4.87	170.9	4.87	162.0	4.57	158.0	3.96	151.1	4.27	144.1	3.96
		84.4	180.9	4.57	170.9	4.27	162.0	3.96	158.0	4.27	151.1	3.66	144.1	3.96
		105.6	180.9	4.57	170.9	4.27	162.0	3.96	158.0	4.27	151.1	3.66	144.1	3.96

TC = Total Heating Capacity (MBh).
PI = Power input (KW).
Power input (KW) includes compressor(s) and controls.
Test condition based on 25 feet of equivalent refrigerant piping and no change in elevation between indoor unit and water source unit.

Due to our policy of continuous product innovation, some specifications may change without notification.
©LG Electronics U.S.A., Inc., Englewood Cliffs, NJ. All rights reserved. "LG" is a registered trademark of LG Corp.

PERFORMANCE DATA

Heating Capacity—ARWB360BA2 / ARWN360BA2 (208/230 Volt)

Table 35a: Heating Capacity ARWB360BA2 / ARWN360BA2

Combination Ratio (%) (Capacity index)	Inlet Water Temperature (°F)	Water Flow Rate (gpm)	Indoor Unit Entering Air Wet Bulb Temperature °F											
			61		65		68		70		72		75	
			TC MBh	PI kW	TC MBh	PI kW	TC MBh	PI kW	TC MBh	PI kW	TC MBh	PI kW	TC MBh	PI kW
130	23	53.0	198.2	24.34	196.5	22.95	195.4	21.40	192.8	20.80	195.2	20.22	190.0	18.13
		105.5	224.3	25.99	222.4	24.67	221.2	23.22	218.2	22.57	220.9	21.94	215.0	19.67
		132.0	247.7	27.63	245.6	26.39	244.3	25.04	241.1	24.35	244.1	23.66	237.5	21.22
	32	53.0	344.4	32.81	336.3	31.80	329.2	30.77	322.0	29.92	323.1	29.07	308.7	26.07
		105.5	352.5	33.13	344.2	32.14	336.9	31.12	329.5	30.26	330.7	29.41	315.9	26.37
		132.0	357.9	33.13	349.4	32.14	342.0	31.12	334.6	30.26	335.7	29.41	320.7	26.37
	41	53.0	494.5	35.33	486.3	34.44	475.6	33.56	463.4	32.63	451.0	31.71	426.1	28.43
		105.5	501.5	35.95	489.9	35.08	475.8	34.25	463.4	33.29	451.0	32.36	426.1	29.01
		132.0	504.4	36.17	491.4	35.32	475.8	34.49	463.4	33.53	451.0	32.59	426.1	29.22
	50	53.0	496.5	31.93	487.8	30.95	475.7	30.40	463.4	29.63	451.0	28.60	426.1	25.82
		105.5	508.1	31.67	497.0	31.05	483.3	30.63	470.8	29.58	457.8	28.54	433.0	25.73
		132.0	510.8	32.12	500.2	31.47	486.4	30.75	473.3	29.70	460.9	29.00	435.4	26.98
	59	53.0	498.5	28.54	489.2	27.47	475.8	27.24	463.4	26.64	451.0	25.49	426.1	23.21
		105.5	514.7	27.40	504.1	27.02	490.7	27.02	478.3	25.87	464.6	24.73	439.8	22.45
		132.0	517.2	28.08	509.1	27.62	496.9	27.02	483.3	25.87	470.8	25.42	444.8	24.73
	68	53.0	517.2	26.25	507.8	25.19	494.4	24.66	480.8	23.97	467.1	23.51	439.8	22.45
		105.5	533.3	25.49	524.0	25.11	509.4	24.58	495.7	24.35	483.3	24.12	455.9	21.69
		132.0	535.8	25.49	527.7	25.11	515.6	24.73	500.7	24.35	487.0	24.12	459.7	23.06
	77	53.0	541.7	25.11	528.0	24.43	515.6	23.97	505.6	23.59	494.4	23.21	465.9	21.69
		105.5	541.7	24.73	528.0	24.28	515.6	23.59	505.6	23.21	494.4	22.83	465.9	21.31
		132.0	541.7	24.35	528.0	23.67	515.6	23.21	505.6	22.83	494.4	22.45	465.9	20.93
	86	53.0	541.7	24.35	528.0	23.29	515.6	22.98	505.6	22.45	494.4	22.07	465.9	20.55
		105.5	541.7	23.59	528.0	23.13	515.6	22.45	505.6	22.07	494.4	21.31	465.9	19.79
		132.0	541.7	23.21	528.0	22.53	515.6	22.07	505.6	21.69	494.4	21.31	465.9	19.79
	95	53.0	541.7	23.21	528.0	22.53	515.6	22.07	505.6	21.31	494.4	20.55	465.9	19.02
		105.5	541.7	22.45	528.0	21.99	515.6	21.69	505.6	20.93	494.4	20.17	465.9	18.26
		132.0	541.7	22.45	528.0	21.76	515.6	21.31	505.6	20.55	494.4	19.79	465.9	18.26
	104	53.0	541.7	22.45	528.0	21.76	515.6	21.31	505.6	20.55	494.4	19.79	465.9	17.88
		105.5	541.7	21.69	528.0	21.23	515.6	20.55	505.6	19.79	494.4	19.02	465.9	17.12
		132.0	541.7	21.31	528.0	20.85	515.6	20.55	505.6	19.79	494.4	19.02	465.9	17.12
	113	53.0	541.7	21.69	528.0	21.00	515.6	20.55	505.6	19.79	494.4	19.03	465.9	16.74
		105.5	541.7	20.93	528.0	20.47	515.6	19.41	505.6	18.64	494.4	17.88	465.9	15.98
		132.0	541.7	20.17	528.0	19.94	515.6	19.79	505.6	19.03	494.4	18.26	465.9	15.98
120	23	53.0	188.4	24.34	186.8	22.95	185.7	21.40	183.5	20.51	185.0	19.92	180.1	17.83
		105.5	213.2	25.99	211.4	24.67	210.2	23.22	207.7	22.25	209.4	21.61	203.7	19.35
		132.0	235.5	27.63	233.5	26.39	232.2	25.04	229.4	24.00	231.3	23.31	225.1	20.87
	32	53.0	327.4	32.81	319.6	31.80	312.8	30.77	306.5	29.49	306.2	28.64	292.5	25.64
		105.5	335.1	33.13	327.1	32.14	320.2	31.12	313.6	29.83	313.4	28.97	299.3	25.94
		132.0	340.2	33.13	332.1	32.14	325.1	31.12	318.4	29.83	318.1	28.97	303.9	25.94
	41	53.0	471.1	35.33	462.9	34.44	452.0	33.56	441.0	32.16	427.4	31.24	403.8	27.97
		105.5	477.7	35.95	466.3	35.08	452.2	34.25	441.0	32.82	427.4	31.87	403.8	28.54
		132.0	480.5	36.17	463.6	35.32	452.2	34.49	441.0	33.06	427.4	32.10	403.8	28.74
	50	53.0	473.0	31.70	464.2	30.84	452.1	30.17	441.0	29.21	427.4	28.17	403.8	25.40
		105.5	481.9	32.13	471.5	31.28	457.2	30.63	446.0	29.35	431.7	28.11	408.1	25.49
		132.0	484.6	32.01	470.0	31.28	459.0	30.75	447.9	29.46	433.6	28.23	410.0	26.36
	59	53.0	474.9	28.08	465.6	27.24	452.2	26.79	441.0	26.25	427.4	25.11	403.8	22.83
		105.5	486.1	28.31	476.8	27.47	462.1	27.02	451.0	25.87	436.1	24.35	412.5	22.45
		132.0	488.6	27.85	476.5	27.24	465.9	27.02	454.7	25.87	439.8	24.35	416.2	23.97
	68	53.0	488.6	25.19	479.3	24.20	464.6	23.59	452.2	23.21	437.3	22.83	413.7	21.61
		105.5	501.0	25.19	490.4	24.58	474.6	23.97	463.4	23.59	448.5	22.75	423.6	21.31
		132.0	503.5	24.96	490.1	24.35	478.3	23.97	465.9	23.59	451.0	22.83	426.1	22.07
	77	53.0	509.4	23.74	494.4	22.68	478.3	22.22	468.4	21.69	455.9	21.31	431.1	19.79
		105.5	510.6	23.36	494.4	22.53	478.3	22.07	468.4	21.31	455.9	20.93	431.1	19.41
		132.0	511.8	22.53	494.4	21.92	478.3	21.69	468.4	21.31	455.9	20.55	431.1	19.41
	86	53.0	511.8	22.60	494.4	21.54	478.3	20.93	468.4	20.17	455.9	19.79	431.1	18.26
		105.5	511.8	21.84	494.4	21.00	478.3	20.55	468.4	19.79	455.9	19.02	431.1	17.88
		132.0	511.8	21.16	494.4	20.55	478.3	20.17	468.4	19.79	455.9	19.02	431.1	17.50
	95	53.0	511.8	21.46	494.4	20.39	478.3	19.79	468.4	19.02	455.9	18.26	431.1	16.74
		105.5	511.8	20.24	494.4	19.63	478.3	19.02	468.4	18.26	455.9	17.50	431.1	16.36
		132.0	511.8	20.01	494.4	19.48	478.3	19.02	468.4	18.26	455.9	17.50	431.1	15.98
	104	53.0	511.8	20.70	494.4	19.41	478.3	18.64	468.4	17.88	455.9	17.12	431.1	15.60
		105.5	511.8	19.10	494.4	18.49	478.3	17.88	468.4	17.12	455.9	16.36	431.1	15.22
		132.0	511.8	18.87	494.4	18.26	478.3	17.88	468.4	17.12	455.9	16.36	431.1	14.84
	113	53.0	511.8	19.94	494.4	18.42	478.3	17.50	468.4	16.74	455.9	15.98	431.1	14.46
		105.5	511.8	17.96	494.4	17.35	478.3	16.74	468.4	15.98	455.9	15.22	431.1	14.08
		132.0	511.8	17.73	494.4	17.05	478.3	16.74	468.4	15.98	455.9	15.22	431.1	13.70

TC = Total Heating Capacity (MBh).
PI = Power input (KW).

Power input (KW) includes compressor(s) and controls.
Test condition based on 25 feet of equivalent refrigerant piping and no change in elevation between indoor unit and water source unit.

Due to our policy of continuous product innovation, some specifications may change without notification.
©LG Electronics U.S.A., Inc., Englewood Cliffs, NJ. All rights reserved. "LG" is a registered trademark of LG Corp.

Table 35b: Heating Capacity ARWB360BA2 / ARWN360BA2

Combination Ratio (%) (Capacity index)	Inlet Water Temperature (°F)	Water Flow Rate (gpm)	Indoor Unit Entering Air Wet Bulb Temperature °F											
			61		65		68		70		72		75	
			TC MBh	PI kW	TC MBh	PI kW	TC MBh	PI kW	TC MBh	PI kW	TC MBh	PI kW	TC MBh	PI kW
110	23	53.0	178.1	24.64	177.1	22.95	176.0	21.40	174.2	20.51	174.3	19.92	170.6	17.83
		105.5	201.5	26.31	200.4	24.67	199.2	23.22	197.2	22.25	197.2	21.61	193.1	19.35
		132.0	222.6	27.98	221.3	26.39	220.1	25.04	217.8	24.00	217.8	23.31	213.3	20.87
	32	53.0	309.5	33.23	303.0	31.80	296.5	30.77	290.9	29.49	288.4	28.64	277.2	25.64
		105.5	316.8	33.55	310.1	32.14	303.4	31.12	297.7	29.83	295.1	28.97	283.7	25.94
		132.0	321.6	33.55	314.8	32.14	308.1	31.12	302.3	29.83	299.7	28.97	288.0	25.94
	41	53.0	450.5	35.79	439.4	34.44	428.4	33.56	418.7	32.16	402.5	31.24	382.6	27.97
		105.5	456.8	36.41	442.7	35.08	428.6	34.25	418.7	32.82	402.5	31.87	382.6	28.54
		132.0	459.4	36.64	444.0	35.32	428.6	34.49	418.7	33.06	402.5	32.10	382.6	28.74
	50	53.0	452.3	32.01	440.7	30.95	428.5	30.29	418.7	29.21	402.5	28.17	382.6	25.40
		105.5	459.2	32.25	445.4	31.28	431.1	30.63	421.1	29.35	405.0	28.11	384.5	25.49
		132.0	461.7	32.25	447.3	31.28	432.3	30.56	421.8	29.27	405.6	28.23	385.7	25.79
	59	53.0	454.1	28.23	442.0	27.47	428.6	27.02	418.7	26.25	402.5	25.11	382.6	22.83
		105.5	461.6	28.08	448.2	27.47	433.6	27.02	423.6	25.87	407.5	24.35	386.4	22.45
		132.0	464.1	27.85	450.7	27.24	436.1	26.64	424.9	25.49	408.7	24.35	388.8	22.83
	68	53.0	462.8	24.43	449.4	23.82	434.8	23.21	423.6	22.83	407.5	22.07	386.4	20.70
		105.5	472.8	24.66	455.7	23.82	439.8	23.21	429.8	22.83	412.5	21.69	392.6	20.55
		132.0	475.3	24.66	459.4	23.82	442.3	23.21	431.1	22.45	414.9	21.69	393.8	20.55
	77	53.0	475.8	22.15	460.9	21.31	442.3	20.93	432.3	20.17	417.4	19.41	395.1	17.88
		105.5	479.5	21.99	460.9	20.93	442.3	20.55	432.3	19.79	417.4	19.02	395.1	17.88
		132.0	482.0	21.99	460.9	21.00	442.3	20.17	432.3	19.79	417.4	18.64	395.1	17.50
	86	53.0	482.0	20.17	460.9	19.41	442.3	18.64	432.3	18.26	417.4	17.12	395.1	15.98
		105.5	482.0	19.79	460.9	19.02	442.3	18.26	432.3	17.88	417.4	16.74	395.1	15.60
		132.0	482.0	19.63	460.9	18.64	442.3	17.88	432.3	17.50	417.4	16.74	395.1	15.60
	95	53.0	482.0	19.02	460.9	17.88	442.3	17.12	432.3	16.36	417.4	15.60	395.1	14.46
		105.5	482.0	18.26	460.9	17.50	442.3	16.74	432.3	15.98	417.4	15.22	395.1	14.08
		132.0	482.0	17.81	460.9	17.12	442.3	16.36	432.3	15.98	417.4	15.22	395.1	14.08
	104	53.0	482.0	17.88	460.9	17.12	442.3	15.98	432.3	15.22	417.4	14.46	395.1	13.32
		105.5	482.0	17.12	460.9	16.36	442.3	15.22	432.3	14.84	417.4	14.08	395.1	12.94
		132.0	482.0	16.89	460.9	15.98	442.3	15.22	432.3	14.46	417.4	13.70	395.1	12.56
	113	53.0	482.0	16.74	460.9	16.36	442.3	14.84	432.3	14.08	417.4	13.32	395.1	12.18
		105.5	482.0	15.98	460.9	15.22	442.3	13.70	432.3	13.70	417.4	12.94	395.1	11.80
		132.0	482.0	15.98	460.9	14.84	442.3	14.08	432.3	12.94	417.4	12.18	395.1	11.03
100	23	53.0	168.3	24.64	167.3	23.24	166.3	21.40	164.9	20.51	163.5	19.61	160.7	17.83
		105.5	190.5	26.31	189.4	24.99	188.2	23.22	186.6	22.25	185.0	21.28	181.8	19.35
		132.0	210.4	27.98	209.2	26.74	207.9	25.04	206.2	24.00	204.4	22.95	200.8	20.87
	32	53.0	292.5	33.23	286.4	32.23	280.2	30.77	275.4	29.49	270.6	28.21	261.0	25.64
		105.5	299.4	33.55	293.1	32.57	286.7	31.12	281.8	29.83	276.9	28.53	267.1	25.94
		132.0	304.0	33.55	297.5	32.57	291.1	31.12	286.1	29.83	281.2	28.53	271.2	25.94
	41	53.0	431.2	35.79	415.9	34.90	404.8	33.56	396.3	32.16	377.7	30.76	360.3	27.97
		105.5	437.1	36.41	419.0	35.56	405.0	34.25	396.3	32.82	377.7	31.39	360.3	28.54
		132.0	439.6	36.64	420.3	35.79	405.0	34.49	396.3	33.06	377.7	31.62	360.3	28.74
	50	53.0	432.9	32.01	417.2	31.26	404.9	30.29	396.3	29.21	377.7	27.75	360.3	25.40
		105.5	437.1	32.59	419.3	31.63	405.0	30.63	396.3	29.35	377.7	27.87	360.3	25.49
		132.0	440.2	32.47	421.2	31.63	405.0	30.56	396.3	29.27	377.7	27.79	360.3	25.41
	59	53.0	434.6	28.23	418.4	27.62	405.0	27.02	396.3	26.25	377.7	24.73	360.3	22.83
		105.5	437.1	28.77	419.6	27.70	405.0	27.02	396.3	25.87	377.7	24.35	360.3	22.45
		132.0	440.8	28.31	422.1	27.47	405.0	26.64	396.3	25.49	377.7	23.97	360.3	22.07
	68	53.0	438.3	24.12	420.9	23.44	405.0	22.83	396.3	22.45	377.7	20.93	360.3	19.79
		105.5	444.5	24.58	422.1	23.51	405.0	22.83	396.3	22.07	377.7	20.55	360.3	19.02
		132.0	447.0	24.12	425.8	23.29	405.0	22.45	396.3	21.69	377.7	20.17	360.3	18.64
	77	53.0	443.5	21.00	427.4	20.24	405.0	19.41	396.3	18.64	377.7	17.50	360.3	15.98
		105.5	449.7	21.08	427.4	19.79	405.0	19.02	396.3	18.26	377.7	17.12	360.3	15.98
		132.0	452.2	20.62	427.4	19.63	405.0	18.64	396.3	17.88	377.7	17.12	360.3	15.60
	86	53.0	452.2	19.02	427.4	17.50	405.0	16.36	396.3	15.98	377.7	14.84	360.3	14.08
		105.5	452.2	18.64	427.4	17.12	405.0	16.21	396.3	15.60	377.7	14.84	360.3	13.70
		132.0	452.2	18.26	427.4	17.12	405.0	15.98	396.3	15.60	377.7	14.46	360.3	13.70
	95	53.0	452.2	17.50	427.4	15.98	405.0	14.46	396.3	14.08	377.7	13.32	360.3	12.18
		105.5	452.2	16.74	427.4	15.22	405.0	14.31	396.3	13.70	377.7	12.94	360.3	11.80
		132.0	452.2	16.74	427.4	15.22	405.0	14.08	396.3	13.70	377.7	12.94	360.3	11.80
	104	53.0	452.2	16.36	427.4	14.84	405.0	12.94	396.3	12.56	377.7	11.80	360.3	11.03
		105.5	452.2	15.60	427.4	14.08	405.0	12.78	396.3	12.18	377.7	11.42	360.3	10.65
		132.0	452.2	15.22	427.4	14.08	405.0	12.56	396.3	12.18	377.7	11.42	360.3	10.65
	113	53.0	452.2	15.22	427.4	13.70	405.0	11.42	396.3	11.03	377.7	10.27	360.3	9.89
		105.5	452.2	14.46	427.4	12.94	405.0	11.26	396.3	10.65	377.7	9.89	360.3	9.51
		132.0	452.2	13.70	427.4	12.94	405.0	11.03	396.3	10.65	377.7	9.89	360.3	9.51

TC = Total Heating Capacity (MBh).
PI = Power input (KW).

Power input (KW) includes compressor(s) and controls.
Test condition based on 25 feet of equivalent refrigerant piping and no change in elevation between indoor unit and water source unit.

LG

Due to our policy of continuous product innovation, some specifications may change without notification.
©LG Electronics U.S.A., Inc., Englewood Cliffs, NJ. All rights reserved. "LG" is a registered trademark of LG Corp.

PERFORMANCE DATA

Heating Capacity—ARWB360BA2 / ARWN360BA2 (208/230 Volt)

Table 35c: Heating Capacity ARWB360BA2 / ARWN360BA2

Combination Ratio (%) (Capacity index)	Inlet Water Temperature (°F)	Water Flow Rate (gpm)	Indoor Unit Entering Air Wet Bulb Temperature °F											
			61		65		68		70		72		75	
			TC MBh	PI kW	TC MBh	PI kW	TC MBh	PI kW	TC MBh	PI kW	TC MBh	PI kW	TC MBh	PI kW
90	23	53.0	159.1	22.88	154.0	20.87	149.5	18.38	148.4	17.53	147.4	16.90	144.6	15.16
		105.5	180.0	24.40	174.3	22.41	169.2	19.95	167.9	19.03	166.8	18.34	163.6	16.45
		132.0	198.8	25.92	192.5	23.96	186.9	21.51	185.5	20.52	184.2	19.78	180.8	17.74
	32	53.0	276.4	30.70	263.6	28.81	251.8	26.44	247.8	25.21	243.9	24.30	234.9	21.80
		105.5	282.9	31.00	269.8	29.11	257.7	26.74	253.6	25.51	249.6	24.58	240.4	22.05
		132.0	287.2	31.00	273.9	29.11	261.7	26.74	257.4	25.51	253.4	24.58	244.1	22.05
	41	53.0	388.7	33.03	375.7	31.17	363.8	28.83	356.5	27.50	340.4	26.50	324.2	23.77
		105.5	390.3	33.60	374.5	31.75	364.0	29.42	356.5	28.06	340.4	27.04	324.2	24.26
		132.0	392.6	33.81	375.7	31.96	364.0	29.63	356.5	28.26	340.4	27.24	324.2	24.43
	50	53.0	390.4	29.03	376.9	27.65	363.9	26.02	356.5	24.97	340.4	23.91	324.2	21.59
		105.5	389.7	29.13	374.8	27.75	364.0	26.13	356.5	25.07	340.4	23.80	324.2	21.64
		132.0	392.1	29.04	376.0	27.66	364.0	26.04	356.5	24.98	340.4	23.89	324.2	21.73
	59	53.0	392.0	25.04	378.0	24.12	364.0	23.21	356.5	22.45	340.4	21.31	324.2	19.41
		105.5	389.2	24.66	375.2	23.74	364.0	22.83	356.5	22.07	340.4	20.55	324.2	19.02
		132.0	391.7	24.28	376.4	23.36	364.0	22.45	356.5	21.69	340.4	20.55	324.2	19.02
	68	53.0	394.5	21.23	379.2	20.55	364.0	19.79	356.5	19.02	340.4	18.26	324.2	17.12
		105.5	392.9	21.23	376.4	20.32	364.0	19.41	356.5	18.64	340.4	17.50	324.2	16.36
		132.0	394.1	20.85	377.7	20.17	364.0	19.41	356.5	18.64	340.4	17.50	324.2	16.36
	77	53.0	402.5	18.49	385.1	17.50	364.0	16.74	356.5	15.98	340.4	15.22	324.2	14.08
		105.5	406.2	18.34	385.1	17.35	364.0	16.36	356.5	15.98	340.4	14.84	324.2	13.70
		132.0	407.5	17.88	385.1	16.97	364.0	16.36	356.5	15.60	340.4	14.84	324.2	13.70
	86	53.0	407.5	16.74	385.1	15.60	364.0	14.46	356.5	14.08	340.4	13.32	324.2	12.18
		105.5	407.5	16.36	385.1	15.22	364.0	14.08	356.5	13.70	340.4	12.94	324.2	12.18
		132.0	407.5	15.98	385.1	14.84	364.0	14.08	356.5	13.70	340.4	12.94	324.2	11.80
	95	53.0	407.5	15.22	385.1	14.08	364.0	12.94	356.5	12.56	340.4	11.80	324.2	11.03
		105.5	407.5	14.84	385.1	13.70	364.0	12.56	356.5	12.18	340.4	11.42	324.2	10.65
		132.0	407.5	14.46	385.1	13.32	364.0	12.18	356.5	11.80	340.4	11.42	324.2	10.65
	104	53.0	407.5	14.08	385.1	12.94	364.0	11.42	356.5	11.03	340.4	10.65	324.2	9.89
		105.5	407.5	13.32	385.1	12.56	364.0	11.03	356.5	10.65	340.4	10.27	324.2	9.51
		132.0	407.5	13.32	385.1	12.56	364.0	11.03	356.5	10.65	340.4	10.27	324.2	9.51
	113	53.0	407.5	12.94	385.1	11.80	364.0	9.89	356.5	9.51	340.4	9.51	324.2	8.75
		105.5	407.5	11.80	385.1	11.42	364.0	9.51	356.5	9.13	340.4	9.13	324.2	8.37
		132.0	407.5	12.18	385.1	11.80	364.0	9.89	356.5	9.51	340.4	9.13	324.2	8.37
80	23	53.0	150.3	16.39	140.7	15.75	133.2	15.07	131.8	14.56	131.2	13.88	128.5	12.78
		105.5	170.1	17.79	159.2	17.09	150.7	16.35	149.2	15.80	148.5	15.06	145.4	13.87
		132.0	187.9	19.19	175.9	18.43	166.5	17.64	164.8	17.04	164.0	16.24	160.7	14.96
	32	53.0	261.2	23.57	240.8	22.65	224.3	21.67	220.1	20.94	217.2	19.96	208.8	18.38
		105.5	267.4	23.85	246.5	22.91	229.6	21.92	225.3	21.18	222.3	20.19	213.7	18.59
		132.0	271.4	23.85	250.2	22.91	233.1	21.92	228.7	21.18	225.7	20.19	217.0	18.59
	41	53.0	359.7	25.71	339.6	24.70	324.1	23.63	316.8	22.84	303.1	21.77	288.2	20.04
		105.5	362.8	26.24	342.2	25.21	324.2	24.12	316.8	23.31	303.1	22.22	288.2	20.45
		132.0	362.8	26.43	341.6	25.39	324.2	24.29	316.8	23.47	303.1	22.38	288.2	20.60
	50	53.0	361.2	23.51	340.6	22.44	324.2	21.33	316.8	20.74	303.1	19.64	288.2	18.20
		105.5	362.8	23.39	341.9	22.31	324.2	21.38	316.8	20.78	303.1	19.67	288.2	18.22
		132.0	362.8	23.30	341.6	22.40	324.2	21.47	316.8	20.68	303.1	19.56	288.2	18.10
	59	53.0	362.8	21.31	341.6	20.17	324.2	19.02	316.8	18.64	303.1	17.50	288.2	16.36
		105.5	362.8	20.55	341.6	19.41	324.2	18.64	316.8	18.26	303.1	17.12	288.2	15.98
		132.0	362.8	20.17	341.6	19.41	324.2	18.64	316.8	17.88	303.1	16.74	288.2	15.60
	68	53.0	362.8	17.88	341.6	17.12	324.2	16.36	316.8	15.98	303.1	15.22	288.2	14.08
		105.5	362.8	17.50	341.6	16.74	324.2	16.36	316.8	15.60	303.1	14.84	288.2	13.70
		132.0	362.8	17.12	341.6	16.36	324.2	15.98	316.8	15.60	303.1	14.46	288.2	13.70
	77	53.0	362.8	15.98	341.6	14.84	324.2	14.08	316.8	13.70	303.1	12.94	288.2	12.18
		105.5	362.8	15.60	341.6	14.46	324.2	14.08	316.8	13.32	303.1	12.56	288.2	11.80
		132.0	362.8	15.22	341.6	14.46	324.2	13.70	316.8	13.32	303.1	12.56	288.2	11.80
	86	53.0	362.8	14.08	341.6	13.32	324.2	12.56	316.8	12.18	303.1	11.42	288.2	10.65
		105.5	362.8	13.70	341.6	12.94	324.2	12.18	316.8	11.80	303.1	11.03	288.2	10.27
		132.0	362.8	13.70	341.6	12.94	324.2	12.18	316.8	11.80	303.1	11.03	288.2	10.27
	95	53.0	362.8	12.94	341.6	12.18	324.2	11.03	316.8	10.65	303.1	10.27	288.2	9.51
		105.5	362.8	12.56	341.6	11.80	324.2	10.65	316.8	10.65	303.1	9.89	288.2	9.51
		132.0	362.8	12.56	341.6	11.42	324.2	10.65	316.8	10.27	303.1	9.89	288.2	9.13
	104	53.0	362.8	12.18	341.6	11.03	324.2	9.89	316.8	9.89	303.1	9.13	288.2	8.75
		105.5	362.8	11.42	341.6	10.65	324.2	9.89	316.8	9.51	303.1	9.13	288.2	8.37
		132.0	362.8	11.42	341.6	10.65	324.2	9.51	316.8	9.51	303.1	9.13	288.2	8.37
	113	53.0	362.8	11.41	341.6	9.89	324.2	8.75	316.8	9.13	303.1	7.99	288.2	7.99
		105.5	362.8	10.27	341.6	9.51	324.2	9.13	316.8	8.37	303.1	8.37	288.2	7.23
		132.0	362.8	10.27	341.6	9.89	324.2	8.37	316.8	8.75	303.1	8.37	288.2	7.61

TC = Total Heating Capacity (MBh).
PI = Power input (KW).

Power input (KW) includes compressor(s) and controls.
Test condition based on 25 feet of equivalent refrigerant piping and no change in elevation between indoor unit and water source unit.

Due to our policy of continuous product innovation, some specifications may change without notification.
©LG Electronics U.S.A., Inc., Englewood Cliffs, NJ. All rights reserved. "LG" is a registered trademark of LG Corp.

PERFORMANCE DATA

Heating Capacity—ARWB360BA2 / ARWN360BA2 (208/230 Volt)

Table 35d: Heating Capacity ARWB360BA2 / ARWN360BA2

Combination Ratio (%) (Capacity index)	Inlet Water Temperature (°F)	Water Flow Rate (gpm)	Indoor Unit Entering Air Wet Bulb Temperature °F											
			61		65		68		70		72		75	
			TC MBh	PI kW	TC MBh	PI kW	TC MBh	PI kW	TC MBh	PI kW	TC MBh	PI kW	TC MBh	PI kW
70	23	53.0	131.3	14.05	123.3	13.37	116.3	12.96	115.3	12.18	114.6	11.77	112.5	10.70
		105.5	148.5	15.25	139.6	14.51	131.6	14.06	130.5	13.22	129.6	12.77	127.3	11.61
		132.0	164.1	16.45	154.2	15.65	145.4	15.17	144.1	14.26	143.2	13.77	140.6	12.52
	32	53.0	228.1	20.21	211.0	19.23	195.9	18.64	192.5	17.52	189.6	16.92	182.7	15.38
		105.5	233.5	20.44	216.0	19.45	200.5	18.85	197.0	17.72	194.0	17.12	187.0	15.56
		132.0	237.1	20.44	219.3	19.45	203.6	18.85	200.0	17.72	197.0	17.12	189.8	15.56
	41	53.0	314.1	22.04	297.6	20.98	283.1	20.33	277.0	19.11	264.6	18.46	252.2	16.78
		105.5	316.8	22.49	299.9	21.40	283.3	20.74	277.0	19.50	264.6	18.83	252.2	17.12
		132.0	316.8	22.65	299.4	21.56	283.3	20.89	277.0	19.64	264.6	18.97	252.2	17.25
	50	53.0	315.5	20.15	298.5	19.05	283.2	18.34	277.0	17.36	264.6	16.65	252.2	15.24
		105.5	316.8	20.00	299.6	18.88	283.3	18.17	277.0	17.36	264.6	16.65	252.2	15.22
		132.0	316.8	20.08	299.4	18.96	283.3	18.25	277.0	17.43	264.6	16.52	252.2	15.28
	59	53.0	316.8	18.26	299.4	17.12	283.3	16.36	277.0	15.60	264.6	14.84	252.2	13.70
		105.5	316.8	17.50	299.4	16.36	283.3	15.60	277.0	15.22	264.6	14.46	252.2	13.32
		132.0	316.8	17.50	299.4	16.36	283.3	15.60	277.0	15.22	264.6	14.08	252.2	13.32
	68	53.0	316.8	15.22	299.4	14.46	283.3	14.08	277.0	13.70	264.6	12.94	252.2	12.18
		105.5	316.8	14.84	299.4	14.08	283.3	13.70	277.0	13.32	264.6	12.56	252.2	11.80
		132.0	316.8	14.84	299.4	14.08	283.3	13.70	277.0	12.94	264.6	12.56	252.2	11.42
	77	53.0	316.8	13.70	299.4	12.94	283.3	12.18	277.0	11.80	264.6	11.03	252.2	10.27
		105.5	316.8	13.32	299.4	12.56	283.3	11.80	277.0	11.42	264.6	11.03	252.2	10.27
		132.0	316.8	12.94	299.4	12.18	283.3	11.80	277.0	11.42	264.6	10.65	252.2	10.27
	86	53.0	316.8	12.18	299.4	11.42	283.3	10.65	277.0	10.27	264.6	9.89	252.2	9.13
		105.5	316.8	11.80	299.4	11.03	283.3	10.27	277.0	10.27	264.6	9.51	252.2	9.13
		132.0	316.8	11.80	299.4	11.03	283.3	10.27	277.0	9.89	264.6	9.51	252.2	9.13
	95	53.0	316.8	11.03	299.4	10.27	283.3	9.51	277.0	9.51	264.6	8.75	252.2	8.37
		105.5	316.8	10.65	299.4	9.89	283.3	9.51	277.0	9.13	264.6	8.75	252.2	7.99
		132.0	316.8	10.65	299.4	9.89	283.3	9.13	277.0	9.13	264.6	8.75	252.2	7.99
	104	53.0	316.8	10.27	299.4	9.51	283.3	8.75	277.0	8.37	264.6	7.99	252.2	7.61
		105.5	316.8	9.89	299.4	9.13	283.3	8.37	277.0	8.37	264.6	7.99	252.2	7.23
		132.0	316.8	9.89	299.4	9.13	283.3	8.37	277.0	7.99	264.6	7.61	252.2	7.23
	113	53.0	316.8	9.51	299.4	8.75	283.3	7.99	277.0	7.23	264.6	7.23	252.2	6.85
		105.5	316.8	9.13	299.4	8.37	283.3	7.23	277.0	7.61	264.6	7.23	252.2	6.47
		132.0	316.8	9.13	299.4	8.37	283.3	7.61	277.0	6.85	264.6	6.47	252.2	6.47
60	23	53.0	112.7	11.42	105.4	11.00	100.0	10.55	98.8	9.81	98.4	9.66	96.4	8.62
		105.5	127.6	12.39	119.3	11.93	113.2	11.45	111.7	10.64	111.4	10.48	109.1	9.35
		132.0	140.9	13.36	131.8	12.87	125.0	12.34	123.4	11.48	123.0	11.30	120.5	10.09
	32	53.0	195.9	16.42	180.4	15.81	168.4	15.17	164.9	14.10	162.9	13.89	156.6	12.39
		105.5	200.5	16.61	184.6	15.99	172.4	15.34	168.7	14.27	166.7	14.05	160.3	12.54
		132.0	203.6	16.61	187.4	15.99	175.0	15.34	171.3	14.27	169.2	14.05	162.7	12.54
	41	53.0	269.8	17.91	254.4	17.25	243.4	16.54	237.3	15.38	227.3	15.14	216.2	13.52
		105.5	272.1	18.27	256.3	17.60	243.5	16.88	237.3	15.70	227.3	15.45	216.2	13.79
		132.0	272.1	18.40	255.9	17.73	243.5	17.00	237.3	15.81	227.3	15.57	216.2	13.89
	50	53.0	270.9	16.37	255.2	15.66	243.4	14.93	237.3	13.97	227.3	13.66	216.2	12.28
		105.5	272.1	16.37	256.1	15.65	243.5	14.91	237.3	14.13	227.3	13.62	216.2	12.41
		132.0	272.1	16.43	255.9	15.52	243.5	14.78	237.3	13.99	227.3	13.49	216.2	12.27
	59	53.0	272.1	14.84	255.9	14.08	243.5	13.32	237.3	12.56	227.3	12.18	216.2	11.03
		105.5	272.1	14.46	255.9	13.70	243.5	12.94	237.3	12.56	227.3	11.80	216.2	11.03
		132.0	272.1	14.46	255.9	13.32	243.5	12.56	237.3	12.18	227.3	11.42	216.2	10.65
	68	53.0	272.1	12.94	255.9	12.18	243.5	11.42	237.3	11.03	227.3	10.65	216.2	9.89
		105.5	272.1	12.56	255.9	11.80	243.5	11.03	237.3	10.65	227.3	10.27	216.2	9.51
		132.0	272.1	12.56	255.9	11.80	243.5	11.03	237.3	10.65	227.3	10.27	216.2	9.51
	77	53.0	272.1	11.42	255.9	10.65	243.5	9.89	237.3	9.89	227.3	9.13	216.2	8.75
		105.5	272.1	11.03	255.9	10.27	243.5	9.89	237.3	9.51	227.3	9.13	216.2	8.37
		132.0	272.1	11.03	255.9	10.27	243.5	9.51	237.3	9.51	227.3	9.13	216.2	8.37
	86	53.0	272.1	10.27	255.9	9.51	243.5	9.13	237.3	8.75	227.3	8.37	216.2	7.99
		105.5	272.1	9.89	255.9	9.13	243.5	8.75	237.3	8.37	227.3	7.99	216.2	7.61
		132.0	272.1	9.89	255.9	9.13	243.5	8.75	237.3	8.37	227.3	7.99	216.2	7.61
	95	53.0	272.1	9.13	255.9	8.75	243.5	7.99	237.3	7.99	227.3	7.61	216.2	7.23
		105.5	272.1	9.13	255.9	8.37	243.5	7.99	237.3	7.61	227.3	7.23	216.2	6.85
		132.0	272.1	9.13	255.9	8.37	243.5	7.61	237.3	7.61	227.3	7.23	216.2	6.85
	104	53.0	272.1	8.37	255.9	7.99	243.5	7.23	237.3	7.23	227.3	6.85	216.2	6.47
		105.5	272.1	8.37	255.9	7.61	243.5	7.23	237.3	6.85	227.3	6.47	216.2	6.47
		132.0	272.1	8.37	255.9	7.61	243.5	7.23	237.3	6.85	227.3	6.47	216.2	6.47
	113	53.0	272.1	7.61	255.9	7.23	243.5	6.47	237.3	6.47	227.3	6.09	216.2	5.71
		105.5	272.1	7.61	255.9	6.85	243.5	6.47	237.3	6.09	227.3	5.71	216.2	6.09
		132.0	272.1	7.61	255.9	6.85	243.5	6.85	237.3	6.09	227.3	5.71	216.2	6.09

TC = Total Heating Capacity (MBh).
PI = Power input (KW).

Power input (KW) includes compressor(s) and controls.
Test condition based on 25 feet of equivalent refrigerant piping and no change in elevation between indoor unit and water source unit.

Due to our policy of continuous product innovation, some specifications may change without notification.
©LG Electronics U.S.A., Inc., Englewood Cliffs, NJ. All rights reserved. "LG" is a registered trademark of LG Corp.

PERFORMANCE DATA

Heating Capacity—ARWB360BA2 / ARWN360BA2 (208/230 Volt)

Table 35e: Heating Capacity ARWB360BA2 / ARWN360BA2

Combination Ratio (%) (Capacity index)	Inlet Water Temperature (°F)	Water Flow Rate (gpm)	Indoor Unit Entering Air Wet Bulb Temperature °F											
			61		65		68		70		72		75	
			TC MBh	PI kW	TC MBh	PI kW	TC MBh	PI kW	TC MBh	PI kW	TC MBh	PI kW	TC MBh	PI kW
50	23	53.0	93.7	9.07	88.0	8.62	83.2	8.14	82.2	7.73	81.8	7.24	80.3	6.84
		105.5	106.0	9.85	99.6	9.35	94.1	8.83	93.0	8.38	92.5	7.86	90.9	7.42
		132.0	117.1	10.62	110.0	10.09	104.0	9.52	102.8	9.04	102.2	8.48	100.4	8.00
	32	53.0	162.8	13.05	150.6	12.39	140.1	11.70	137.3	11.11	135.3	10.41	130.5	9.83
		105.5	166.6	13.20	154.2	12.54	143.4	11.84	140.5	11.24	138.5	10.53	133.5	9.94
		132.0	169.2	13.20	156.5	12.54	145.6	11.84	142.6	11.24	140.6	10.53	135.6	9.94
	41	53.0	224.2	14.23	212.4	13.52	202.4	12.76	197.5	12.12	188.8	11.36	180.1	10.72
		105.5	226.1	14.52	214.0	13.79	202.5	13.02	197.5	12.37	188.8	11.59	180.1	10.94
		132.0	226.1	14.63	213.7	13.89	202.5	13.12	197.5	12.46	188.8	11.67	180.1	11.02
	50	53.0	225.1	13.01	213.0	12.28	202.4	11.52	197.5	11.01	188.8	10.25	180.1	9.74
		105.5	226.1	12.97	213.8	12.22	202.5	11.46	197.5	10.94	188.8	10.36	180.1	9.66
		132.0	226.1	13.02	213.7	12.27	202.5	11.50	197.5	10.98	188.8	10.21	180.1	9.69
	59	53.0	226.1	11.80	213.7	11.03	202.5	10.27	197.5	9.89	188.8	9.13	180.1	8.75
		105.5	226.1	11.42	213.7	10.65	202.5	9.89	197.5	9.51	188.8	9.13	180.1	8.37
		132.0	226.1	11.42	213.7	10.65	202.5	9.89	197.5	9.51	188.8	8.75	180.1	8.37
	68	53.0	226.1	10.27	213.7	9.51	202.5	9.13	197.5	8.75	188.8	8.37	180.1	7.61
		105.5	226.1	9.89	213.7	9.13	202.5	8.75	197.5	8.37	188.8	7.99	180.1	7.61
		132.0	226.1	9.89	213.7	9.13	202.5	8.75	197.5	8.37	188.8	7.99	180.1	7.61
	77	53.0	226.1	9.13	213.7	8.37	202.5	7.99	197.5	7.61	188.8	7.23	180.1	6.85
		105.5	226.1	8.75	213.7	8.37	202.5	7.61	197.5	7.61	188.8	7.23	180.1	6.85
		132.0	226.1	8.75	213.7	8.37	202.5	7.61	197.5	7.61	188.8	7.23	180.1	6.85
	86	53.0	226.1	8.37	213.7	7.61	202.5	7.23	197.5	6.85	188.8	6.85	180.1	6.47
		105.5	226.1	7.99	213.7	7.23	202.5	6.85	197.5	6.85	188.8	6.47	180.1	6.09
		132.0	226.1	7.99	213.7	7.23	202.5	6.85	197.5	6.85	188.8	6.47	180.1	6.09
	95	53.0	226.1	7.61	213.7	6.85	202.5	6.47	197.5	6.47	188.8	6.09	180.1	5.71
		105.5	226.1	7.23	213.7	6.85	202.5	6.47	197.5	6.09	188.8	6.09	180.1	5.71
		132.0	226.1	7.23	213.7	6.85	202.5	6.47	197.5	6.09	188.8	6.09	180.1	5.71
	104	53.0	226.1	6.85	213.7	6.47	202.5	6.09	197.5	5.71	188.8	5.71	180.1	5.33
		105.5	226.1	6.47	213.7	6.09	202.5	5.71	197.5	5.71	188.8	5.33	180.1	5.33
		132.0	226.1	6.47	213.7	6.09	202.5	5.71	197.5	5.71	188.8	5.33	180.1	5.33
	113	53.0	226.1	6.09	213.7	6.09	202.5	5.71	197.5	4.95	188.8	5.33	180.1	4.95
		105.5	226.1	5.71	213.7	5.33	202.5	4.95	197.5	5.33	188.8	4.57	180.1	4.95
		132.0	226.1	5.71	213.7	5.33	202.5	4.95	197.5	5.33	188.8	4.57	180.1	4.95

TC = Total Heating Capacity (MBh)
PI = Power input (KW)
Power input (KW) includes compressor(s) and controls.
Test condition based on 25 feet of equivalent refrigerant piping and no change in elevation between indoor unit and water source unit.

Due to our policy of continuous product innovation, some specifications may change without notification.
©LG Electronics U.S.A., Inc., Englewood Cliffs, NJ. All rights reserved. "LG" is a registered trademark of LG Corp.

PERFORMANCE DATA

Heating Capacity—ARWB360BA2 / ARWN360BA2 (208/230 Volt)

Table 36a: Heating Capacity ARWB432BA2 / ARWN432BA2

Combination Ratio (%) (Capacity index)	Inlet Water Temperature (°F)	Water Flow Rate (gpm)	Indoor Unit Entering Air Wet Bulb Temperature °F											
			61		65		68		70		72		75	
			TC MBh	PI kW	TC MBh	PI kW	TC MBh	PI kW	TC MBh	PI kW	TC MBh	PI kW	TC MBh	PI kW
130	23	63.6	237.8	29.20	235.8	27.52	234.5	25.66	231.4	24.95	234.3	24.25	228.0	21.74
		126.6	269.1	31.17	266.8	29.58	265.4	27.85	261.9	27.07	265.1	26.31	258.0	23.59
		158.4	297.3	33.14	294.8	31.65	293.2	30.03	289.3	29.20	292.9	28.38	285.1	25.44
	32	63.6	413.3	39.35	403.5	38.14	395.0	36.90	386.4	35.88	387.7	34.87	370.4	31.26
		126.6	423.0	39.73	413.0	38.54	404.2	37.33	395.4	36.29	396.8	35.27	379.1	31.63
		158.4	429.5	39.73	419.3	38.54	410.4	37.33	401.5	36.29	402.9	35.27	384.9	31.63
	41	63.6	593.4	42.37	583.6	41.30	570.7	40.25	556.1	39.13	541.2	38.03	511.3	34.10
		126.6	601.8	43.11	587.9	42.07	571.0	41.07	556.1	39.93	541.2	38.81	511.3	34.80
		158.4	605.3	43.38	589.7	42.35	571.0	41.37	556.1	40.22	541.2	39.09	511.3	35.05
	50	63.6	595.8	38.30	585.3	37.12	570.8	36.46	556.1	35.54	541.2	34.30	511.3	30.97
		126.6	609.7	37.98	596.4	37.24	579.9	36.73	565.0	35.48	549.4	34.23	519.5	30.86
		158.4	612.9	38.53	600.3	37.74	583.6	36.88	568.0	35.62	553.1	34.78	522.5	32.35
	59	63.6	598.3	34.23	587.0	32.95	571.0	32.67	556.1	31.94	541.2	30.57	511.3	27.84
		126.6	617.6	32.86	604.9	32.40	588.9	32.40	574.0	31.03	557.6	29.66	527.7	26.92
		158.4	620.6	33.68	610.9	33.13	596.3	32.40	579.9	31.03	565.0	30.48	533.7	29.66
	68	63.6	620.6	31.49	609.4	30.21	593.3	29.57	576.9	28.75	560.5	28.20	527.7	26.92
		126.6	640.0	30.57	628.8	30.12	611.2	29.48	594.8	29.21	579.9	28.93	547.1	26.01
		158.4	643.0	30.57	633.3	30.12	618.7	29.66	600.8	29.21	584.4	28.93	551.6	27.65
	77	63.6	650.0	30.12	633.6	29.30	618.7	28.75	606.8	28.29	593.3	27.84	559.1	26.01
		126.6	650.0	29.66	633.6	29.11	618.7	28.29	606.8	27.84	593.3	27.38	559.1	25.55
		158.4	650.0	29.21	633.6	28.38	618.7	27.84	606.8	27.38	593.3	26.92	559.1	25.10
	86	63.6	650.0	29.21	633.6	27.93	618.7	27.56	606.8	26.92	593.3	26.47	559.1	24.64
		126.6	650.0	28.29	633.6	27.74	618.7	26.92	606.8	26.47	593.3	25.55	559.1	23.73
		158.4	650.0	27.84	633.6	27.02	618.7	26.47	606.8	26.01	593.3	25.55	559.1	23.73
	95	63.6	650.0	27.84	633.6	27.02	618.7	26.47	606.8	25.55	593.3	24.64	559.1	22.82
		126.6	650.0	26.92	633.6	26.38	618.7	26.01	606.8	25.10	593.3	24.19	559.1	21.90
		158.4	650.0	26.92	633.6	26.10	618.7	25.55	606.8	24.64	593.3	23.73	559.1	21.90
	104	63.6	650.0	26.92	633.6	26.10	618.7	25.55	606.8	24.64	593.3	23.73	559.1	21.45
		126.6	650.0	26.01	633.6	25.46	618.7	24.64	606.8	23.73	593.3	22.82	559.1	20.54
		158.4	650.0	25.55	633.6	25.01	618.7	24.64	606.8	23.73	593.3	22.82	559.1	20.54
	113	63.6	650.0	26.01	633.6	25.19	618.7	24.64	606.8	23.73	593.3	22.82	559.1	20.08
		126.6	650.0	25.10	633.6	24.55	618.7	23.27	606.8	22.36	593.3	21.45	559.1	19.17
		158.4	650.0	24.19	633.6	23.91	618.7	23.73	606.8	22.82	593.3	21.90	559.1	19.17
120	23	63.6	226.1	29.20	224.1	27.52	222.9	25.66	220.3	24.59	222.0	23.88	216.1	21.38
		126.6	255.8	31.17	253.6	29.58	252.2	27.85	249.2	26.69	251.2	25.92	244.5	23.21
		158.4	282.6	33.14	280.2	31.65	278.6	30.03	275.3	28.78	277.5	27.95	270.1	25.03
	32	63.6	392.9	39.35	383.6	38.14	375.4	36.90	367.7	35.36	367.4	34.35	351.0	30.75
		126.6	402.1	39.73	392.6	38.54	384.2	37.33	376.4	35.77	376.0	34.74	359.2	31.11
		158.4	408.3	39.73	398.6	38.54	390.1	37.33	382.1	35.77	381.8	34.74	364.7	31.11
	41	63.6	565.3	42.37	555.4	41.30	542.4	40.25	529.2	38.57	512.8	37.46	484.5	33.54
		126.6	573.3	43.11	559.6	42.07	542.6	41.07	529.2	39.36	512.8	38.23	484.5	34.23
		158.4	576.6	43.38	556.4	42.35	542.6	41.37	529.2	39.64	512.8	38.50	484.5	34.47
	50	63.6	567.6	38.02	557.1	36.99	542.5	36.19	529.2	35.03	512.8	33.79	484.5	30.46
		126.6	578.3	38.53	565.8	37.51	548.6	36.73	535.2	35.19	518.1	33.72	489.7	30.57
		158.4	581.5	38.39	564.1	37.51	550.8	36.88	537.4	35.34	520.3	33.85	492.0	31.61
	59	63.6	569.9	33.68	558.7	32.67	542.6	32.13	529.2	31.49	512.8	30.12	484.5	27.38
		126.6	583.4	33.95	572.1	32.95	554.6	32.40	541.2	31.03	523.3	29.21	494.9	26.92
		158.4	586.3	33.40	571.7	32.67	559.1	32.40	545.6	31.03	527.7	29.21	499.4	28.75
	68	63.6	586.3	30.21	575.1	29.02	557.6	28.29	542.6	27.84	524.8	27.38	496.4	25.92
		126.6	601.2	30.21	588.5	29.48	569.5	28.75	556.1	28.29	538.2	27.29	508.4	25.55
		158.4	604.2	29.94	588.1	29.21	574.0	28.75	559.1	28.29	541.2	27.38	511.3	26.47
	77	63.6	611.2	28.48	593.3	27.20	574.0	26.65	562.0	26.01	547.1	25.55	517.3	23.73
		126.6	612.7	28.02	593.3	27.02	574.0	26.47	562.0	25.55	547.1	25.10	517.3	23.27
		158.4	614.2	27.02	593.3	26.28	574.0	26.01	562.0	25.55	547.1	24.64	517.3	23.27
	86	63.6	614.2	27.11	593.3	25.83	574.0	25.10	562.0	24.19	547.1	23.73	517.3	21.90
		126.6	614.2	26.19	593.3	25.19	574.0	24.64	562.0	23.73	547.1	22.82	517.3	21.45
		158.4	614.2	25.37	593.3	24.64	574.0	24.19	562.0	23.73	547.1	22.82	517.3	20.99
	95	63.6	614.2	25.74	593.3	24.46	574.0	23.73	562.0	22.82	547.1	21.90	517.3	20.08
		126.6	614.2	24.28	593.3	23.55	574.0	22.82	562.0	21.90	547.1	20.99	517.3	19.62
		158.4	614.2	24.00	593.3	23.36	574.0	22.82	562.0	21.90	547.1	20.99	517.3	19.17
	104	63.6	614.2	24.82	593.3	23.27	574.0	22.36	562.0	21.45	547.1	20.54	517.3	18.71
		126.6	614.2	22.91	593.3	22.18	574.0	21.45	562.0	20.54	547.1	19.62	517.3	18.25
		158.4	614.2	22.63	593.3	21.90	574.0	21.45	562.0	20.54	547.1	19.62	517.3	17.80
	113	63.6	614.2	23.91	593.3	22.09	574.0	20.99	562.0	20.08	547.1	19.17	517.3	17.34
		126.6	614.2	21.54	593.3	20.81	574.0	20.08	562.0	19.17	547.1	18.25	517.3	16.88
		158.4	614.2	21.27	593.3	20.44	574.0	20.08	562.0	19.17	547.1	18.25	517.3	16.43

TC = Total Heating Capacity (MBh).
PI = Power input (KW).

Power input (KW) includes compressor(s) and controls.
Test condition based on 25 feet of equivalent refrigerant piping and no change in elevation between indoor unit and water source unit.

LG

Due to our policy of continuous product innovation, some specifications may change without notification.
©LG Electronics U.S.A., Inc., Englewood Cliffs, NJ. All rights reserved. "LG" is a registered trademark of LG Corp.

PERFORMANCE DATA

Heating Capacity—ARWB432BA2 / ARWN432BA2 (208/230 Volt)

Table 36b: Heating Capacity ARWB432BA2 / ARWN432BA2

Combination Ratio (%) (Capacity index)	Inlet Water Temperature (°F)	Water Flow Rate (gpm)	Indoor Unit Entering Air Wet Bulb Temperature °F											
			61		65		68		70		72		75	
			TC MBh	PI kW	TC MBh	PI kW	TC MBh	PI kW	TC MBh	PI kW	TC MBh	PI kW	TC MBh	PI kW
110	23	63.6	213.7	29.55	212.5	27.52	211.3	25.66	209.1	24.59	209.1	23.88	204.8	21.38
		126.6	241.8	31.55	240.4	29.58	239.0	27.85	236.6	26.69	236.6	25.92	231.7	23.21
		158.4	267.2	33.55	265.6	31.65	264.1	30.03	261.4	28.78	261.4	27.95	256.0	25.03
	32	63.6	371.5	39.85	363.6	38.14	355.8	36.90	349.1	35.36	346.1	34.35	332.6	30.75
		126.6	380.2	40.24	372.1	38.54	364.1	37.33	357.3	35.77	354.2	34.74	340.4	31.11
		158.4	386.0	40.24	377.8	38.54	369.7	37.33	362.7	35.77	359.6	34.74	345.6	31.11
	41	63.6	540.6	42.92	527.3	41.30	514.1	40.25	502.4	38.57	483.0	37.46	459.2	33.54
		126.6	548.1	43.67	531.2	42.07	514.3	41.07	502.4	39.36	483.0	38.23	459.2	34.23
		158.4	551.3	43.94	532.8	42.35	514.3	41.37	502.4	39.64	483.0	38.50	459.2	34.47
	50	63.6	542.8	38.39	528.8	37.12	514.2	36.32	502.4	35.03	483.0	33.79	459.2	30.46
		126.6	551.0	38.67	534.5	37.51	517.3	36.73	505.4	35.19	486.0	33.72	461.4	30.57
		158.4	554.1	38.67	536.8	37.51	518.8	36.65	506.1	35.11	486.7	33.85	462.9	30.93
	59	63.6	545.0	33.86	530.4	32.95	514.3	32.40	502.4	31.49	483.0	30.12	459.2	27.38
		126.6	553.9	33.68	537.9	32.95	520.3	32.40	508.4	31.03	489.0	29.21	463.6	26.92
		158.4	556.9	33.40	540.8	32.67	523.3	31.94	509.9	30.57	490.5	29.21	466.6	27.38
	68	63.6	555.4	29.30	539.3	28.57	521.8	27.84	508.4	27.38	489.0	26.47	463.6	24.82
		126.6	567.3	29.57	546.8	28.57	527.7	27.84	515.8	27.38	494.9	26.01	471.1	24.64
		158.4	570.3	29.57	551.3	28.57	530.7	27.84	517.3	26.92	497.9	26.01	472.6	24.64
	77	63.6	571.0	26.56	553.1	25.55	530.7	25.10	518.8	24.19	500.9	23.27	474.1	21.45
		126.6	575.4	26.38	553.1	25.10	530.7	24.64	518.8	23.73	500.9	22.82	474.1	21.45
		158.4	578.4	26.38	553.1	25.19	530.7	24.19	518.8	23.73	500.9	22.36	474.1	20.99
	86	63.6	578.4	24.19	553.1	23.27	530.7	22.36	518.8	21.90	500.9	20.54	474.1	19.17
		126.6	578.4	23.73	553.1	22.82	530.7	21.90	518.8	21.45	500.9	20.08	474.1	18.71
		158.4	578.4	23.55	553.1	22.36	530.7	21.45	518.8	20.99	500.9	20.08	474.1	18.71
	95	63.6	578.4	22.82	553.1	21.45	530.7	20.54	518.8	19.62	500.9	18.71	474.1	17.34
		126.6	578.4	21.90	553.1	20.99	530.7	20.08	518.8	19.17	500.9	18.25	474.1	16.88
		158.4	578.4	21.36	553.1	20.54	530.7	19.62	518.8	19.17	500.9	18.25	474.1	16.88
	104	63.6	578.4	21.45	553.1	20.54	530.7	19.17	518.8	18.25	500.9	17.34	474.1	15.97
		126.6	578.4	20.54	553.1	19.62	530.7	18.25	518.8	17.80	500.9	16.88	474.1	15.52
		158.4	578.4	20.26	553.1	19.17	530.7	18.25	518.8	17.34	500.9	16.43	474.1	15.06
	113	63.6	578.4	20.08	553.1	19.62	530.7	17.80	518.8	16.88	500.9	15.97	474.1	14.60
		126.6	578.4	19.17	553.1	18.25	530.7	16.43	518.8	16.43	500.9	15.52	474.1	14.15
		158.4	578.4	19.17	553.1	17.80	530.7	16.88	518.8	15.52	500.9	14.60	474.1	13.23
100	23	63.6	202.0	29.55	200.8	27.88	199.6	25.66	197.9	24.59	196.2	23.52	192.8	21.38
		126.6	228.6	31.55	227.2	29.97	225.9	27.85	224.0	26.69	222.0	25.53	218.2	23.21
		158.4	252.5	33.55	251.0	32.07	249.5	30.03	247.4	28.78	245.3	27.53	241.0	25.03
	32	63.6	351.1	39.85	343.6	38.65	336.2	36.90	330.5	35.36	324.7	33.83	313.2	30.75
		126.6	359.3	40.24	351.7	39.06	344.1	37.33	338.2	35.77	332.3	34.22	320.5	31.11
		158.4	364.8	40.24	357.1	39.06	349.3	37.33	343.4	35.77	337.4	34.22	325.4	31.11
	41	63.6	517.4	42.92	499.1	41.86	485.7	40.25	475.6	38.57	453.2	36.89	432.3	33.54
		126.6	524.5	43.67	502.8	42.64	486.0	41.07	475.6	39.36	453.2	37.65	432.3	34.23
		158.4	527.5	43.94	504.3	42.93	486.0	41.37	475.6	39.64	453.2	37.92	432.3	34.47
	50	63.6	519.4	38.39	500.6	37.49	485.9	36.32	475.6	35.03	453.2	33.28	432.3	30.46
		126.6	524.5	39.08	503.2	37.93	486.0	36.73	475.6	35.19	453.2	33.43	432.3	30.57
		158.4	528.2	38.95	505.4	37.94	486.0	36.65	475.6	35.11	453.2	33.33	432.3	30.47
	59	63.6	521.5	33.86	502.1	33.13	486.0	32.40	475.6	31.49	453.2	29.66	432.3	27.38
		126.6	524.5	34.50	503.6	33.22	486.0	32.40	475.6	31.03	453.2	29.21	432.3	26.92
		158.4	529.0	33.95	506.5	32.95	486.0	31.94	475.6	30.57	453.2	28.75	432.3	26.47
	68	63.6	526.0	28.93	505.1	28.11	486.0	27.38	475.6	26.92	453.2	25.10	432.3	23.73
		126.6	533.4	29.48	506.5	28.20	486.0	27.38	475.6	26.47	453.2	24.64	432.3	22.82
		158.4	536.4	28.93	511.0	27.93	486.0	26.92	475.6	26.01	453.2	24.19	432.3	22.36
	77	63.6	532.2	25.19	512.8	24.28	486.0	23.27	475.6	22.36	453.2	20.99	432.3	19.17
		126.6	539.7	25.28	512.8	23.73	486.0	22.82	475.6	21.90	453.2	20.54	432.3	19.17
		158.4	542.6	24.73	512.8	23.55	486.0	22.36	475.6	21.45	453.2	20.54	432.3	18.71
	86	63.6	542.6	22.82	512.8	20.99	486.0	19.62	475.6	19.17	453.2	17.80	432.3	16.88
		126.6	542.6	22.36	512.8	20.54	486.0	19.44	475.6	18.71	453.2	17.80	432.3	16.43
		158.4	542.6	21.90	512.8	20.54	486.0	19.17	475.6	18.71	453.2	17.34	432.3	16.43
	95	63.6	542.6	20.99	512.8	19.17	486.0	17.34	475.6	16.88	453.2	15.97	432.3	14.60
		126.6	542.6	20.08	512.8	18.25	486.0	17.16	475.6	16.43	453.2	15.52	432.3	14.15
		158.4	542.6	20.08	512.8	18.25	486.0	16.88	475.6	16.43	453.2	15.52	432.3	14.15
	104	63.6	542.6	19.62	512.8	17.80	486.0	15.52	475.6	15.06	453.2	14.15	432.3	13.23
		126.6	542.6	18.71	512.8	16.88	486.0	15.33	475.6	14.60	453.2	13.69	432.3	12.78
		158.4	542.6	18.25	512.8	16.88	486.0	15.06	475.6	14.60	453.2	13.69	432.3	12.78
	113	63.6	542.6	18.25	512.8	16.43	486.0	13.69	475.6	13.23	453.2	12.32	432.3	11.86
		126.6	542.6	17.34	512.8	15.52	486.0	13.51	475.6	12.78	453.2	11.86	432.3	11.41
		158.4	542.6	16.43	512.8	15.52	486.0	13.23	475.6	12.78	453.2	11.86	432.3	11.41

TC = Total Heating Capacity (MBh).
PI = Power input (KW).

Power input (KW) includes compressor(s) and controls.
Test condition based on 25 feet of equivalent refrigerant piping and no change in elevation between indoor unit and water source unit.

Due to our policy of continuous product innovation, some specifications may change without notification.
©LG Electronics U.S.A., Inc., Englewood Cliffs, NJ. All rights reserved. "LG" is a registered trademark of LG Corp.

Table 36c: Heating Capacity ARWB432BA2 / ARWN432BA2

Combination Ratio (%) (Capacity index)	Inlet Water Temperature (°F)	Water Flow Rate (gpm)	Indoor Unit Entering Air Wet Bulb Temperature °F											
			61		65		68		70		72		75	
			TC MBh	PI kW	TC MBh	PI kW	TC MBh	PI kW	TC MBh	PI kW	TC MBh	PI kW	TC MBh	PI kW
90	23	63.6	190.9	27.44	184.8	25.03	179.4	22.05	178.1	21.03	176.8	20.27	173.5	18.18
		126.6	216.0	29.26	209.2	26.88	203.0	23.92	201.5	22.82	200.1	21.99	196.3	19.72
		158.4	238.6	31.09	231.1	28.73	224.3	25.80	222.6	24.61	221.1	23.72	216.9	21.27
	32	63.6	331.7	36.82	316.3	34.55	302.2	31.70	297.3	30.24	292.6	29.14	281.9	26.14
		126.6	339.5	37.18	323.7	34.91	309.3	32.07	304.3	30.59	299.5	29.48	288.5	26.44
		158.4	344.7	37.18	328.7	34.91	314.0	32.07	308.9	30.59	304.1	29.48	292.9	26.44
	41	63.6	466.5	39.61	450.9	37.39	436.6	34.58	427.9	32.98	408.5	31.79	389.1	28.51
		126.6	468.3	40.30	449.4	38.08	436.8	35.29	427.9	33.65	408.5	32.43	389.1	29.09
		158.4	471.2	40.55	450.8	38.33	436.8	35.54	427.9	33.90	408.5	32.67	389.1	29.30
	50	63.6	468.4	34.82	452.2	33.16	436.7	31.21	427.9	29.95	408.5	28.67	389.1	25.89
		126.6	467.7	34.94	449.8	33.28	436.8	31.33	427.9	30.06	408.5	28.54	389.1	25.95
		158.4	470.6	34.83	451.3	33.18	436.8	31.23	427.9	29.95	408.5	28.66	389.1	26.06
	59	63.6	470.4	30.03	453.6	28.93	436.8	27.84	427.9	26.92	408.5	25.55	389.1	23.27
		126.6	467.0	29.57	450.2	28.48	436.8	27.38	427.9	26.47	408.5	24.64	389.1	22.82
		158.4	470.0	29.11	451.7	28.02	436.8	26.92	427.9	26.01	408.5	24.64	389.1	22.82
	68	63.6	473.4	25.46	455.1	24.64	436.8	23.73	427.9	22.82	408.5	21.90	389.1	20.54
		126.6	471.5	25.46	451.7	24.37	436.8	23.27	427.9	22.36	408.5	20.99	389.1	19.62
		158.4	473.0	25.01	453.2	24.19	436.8	23.27	427.9	22.36	408.5	20.99	389.1	19.62
	77	63.6	483.0	22.18	462.1	20.99	436.8	20.08	427.9	19.17	408.5	18.25	389.1	16.88
		126.6	487.5	22.00	462.1	20.81	436.8	19.62	427.9	19.17	408.5	17.80	389.1	16.43
		158.4	489.0	21.45	462.1	20.35	436.8	19.62	427.9	18.71	408.5	17.80	389.1	16.43
	86	63.6	489.0	20.08	462.1	18.71	436.8	17.34	427.9	16.88	408.5	15.97	389.1	14.60
		126.6	489.0	19.62	462.1	18.25	436.8	16.88	427.9	16.43	408.5	15.52	389.1	14.60
		158.4	489.0	19.17	462.1	17.80	436.8	16.88	427.9	16.43	408.5	15.52	389.1	14.15
	95	63.6	489.0	18.25	462.1	16.88	436.8	15.52	427.9	15.06	408.5	14.15	389.1	13.23
		126.6	489.0	17.80	462.1	16.43	436.8	15.06	427.9	14.60	408.5	13.69	389.1	12.78
		158.4	489.0	17.34	462.1	15.97	436.8	14.60	427.9	14.15	408.5	13.69	389.1	12.78
	104	63.6	489.0	16.88	462.1	15.52	436.8	13.69	427.9	13.23	408.5	12.78	389.1	11.86
		126.6	489.0	15.97	462.1	15.06	436.8	13.23	427.9	12.78	408.5	12.32	389.1	11.41
		158.4	489.0	15.97	462.1	15.06	436.8	13.23	427.9	12.78	408.5	12.32	389.1	11.41
	113	63.6	489.0	15.52	462.1	14.15	436.8	11.86	427.9	11.41	408.5	11.41	389.1	10.50
		126.6	489.0	14.15	462.1	13.69	436.8	11.41	427.9	10.95	408.5	10.95	389.1	10.04
		158.4	489.0	14.60	462.1	14.15	436.8	11.86	427.9	11.41	408.5	10.95	389.1	10.04
80	23	63.6	180.4	19.66	168.9	18.89	159.8	18.07	158.2	17.46	157.5	16.65	154.2	15.33
		126.6	204.1	21.34	191.1	20.50	180.8	19.61	179.0	18.95	178.2	18.06	174.5	16.63
		158.4	225.5	23.01	211.1	22.11	199.8	21.15	197.8	20.44	196.9	19.48	192.8	17.94
	32	63.6	313.5	28.27	289.0	27.16	269.2	25.99	264.2	25.11	260.6	23.94	250.5	22.04
		126.6	320.8	28.60	295.8	27.48	275.5	26.29	270.3	25.40	266.7	24.22	256.4	22.29
		158.4	325.7	28.60	300.3	27.48	279.7	26.29	274.5	25.40	270.8	24.22	260.3	22.29
	41	63.6	431.6	30.84	407.5	29.63	388.9	28.34	380.2	27.39	363.8	26.11	345.9	24.04
		126.6	435.3	31.47	410.6	30.23	389.1	28.92	380.2	27.95	363.8	26.64	345.9	24.53
		158.4	435.3	31.69	410.0	30.45	389.1	29.13	380.2	28.15	363.8	26.84	345.9	24.70
	50	63.6	433.5	28.20	408.7	26.91	389.0	25.58	380.2	24.88	363.8	23.55	345.9	21.83
		126.6	435.3	28.05	410.3	26.75	389.1	25.64	380.2	24.93	363.8	23.59	345.9	21.85
		158.4	435.3	27.94	410.0	26.86	389.1	25.75	380.2	24.80	363.8	23.46	345.9	21.71
	59	63.6	435.3	25.55	410.0	24.19	389.1	22.82	380.2	22.36	363.8	20.99	345.9	19.62
		126.6	435.3	24.64	410.0	23.27	389.1	22.36	380.2	21.90	363.8	20.54	345.9	19.17
		158.4	435.3	24.19	410.0	23.27	389.1	22.36	380.2	21.45	363.8	20.08	345.9	18.71
	68	63.6	435.3	21.45	410.0	20.54	389.1	19.62	380.2	19.17	363.8	18.25	345.9	16.88
		126.6	435.3	20.99	410.0	20.08	389.1	19.62	380.2	18.71	363.8	17.80	345.9	16.43
		158.4	435.3	20.54	410.0	19.62	389.1	19.17	380.2	18.71	363.8	17.34	345.9	16.43
	77	63.6	435.3	19.17	410.0	17.80	389.1	16.88	380.2	16.43	363.8	15.52	345.9	14.60
		126.6	435.3	18.71	410.0	17.34	389.1	16.88	380.2	15.97	363.8	15.06	345.9	14.15
		158.4	435.3	18.25	410.0	17.34	389.1	16.43	380.2	15.97	363.8	15.06	345.9	14.15
	86	63.6	435.3	16.88	410.0	15.97	389.1	15.06	380.2	14.60	363.8	13.69	345.9	12.78
		126.6	435.3	16.43	410.0	15.52	389.1	14.60	380.2	14.15	363.8	13.23	345.9	12.32
		158.4	435.3	16.43	410.0	15.52	389.1	14.60	380.2	14.15	363.8	13.23	345.9	12.32
	95	63.6	435.3	15.52	410.0	14.60	389.1	13.23	380.2	12.78	363.8	12.32	345.9	11.41
		126.6	435.3	15.06	410.0	14.15	389.1	12.78	380.2	12.78	363.8	11.86	345.9	11.41
		158.4	435.3	15.06	410.0	13.69	389.1	12.78	380.2	12.32	363.8	11.86	345.9	10.95
	104	63.6	435.3	14.60	410.0	13.23	389.1	11.86	380.2	11.86	363.8	10.95	345.9	10.50
		126.6	435.3	13.69	410.0	12.78	389.1	11.86	380.2	11.41	363.8	10.95	345.9	10.04
		158.4	435.3	13.69	410.0	12.78	389.1	11.41	380.2	11.41	363.8	10.95	345.9	10.04
	113	63.6	435.3	13.69	410.0	11.86	389.1	10.50	380.2	10.95	363.8	9.58	345.9	9.58
		126.6	435.3	12.32	410.0	11.41	389.1	10.95	380.2	10.04	363.8	10.04	345.9	8.67
		158.4	435.3	12.32	410.0	11.86	389.1	10.04	380.2	10.50	363.8	10.04	345.9	9.13

TC = Total Heating Capacity (MBh).
PI = Power input (KW).

Power input (KW) includes compressor(s) and controls.
Test condition based on 25 feet of equivalent refrigerant piping and no change in elevation between indoor unit and water source unit.

LG

Due to our policy of continuous product innovation, some specifications may change without notification.
©LG Electronics U.S.A., Inc., Englewood Cliffs, NJ. All rights reserved. "LG" is a registered trademark of LG Corp.

PERFORMANCE DATA

Heating Capacity—ARWB432BA2 / ARWN432BA2 (208/230 Volt)

Table 36d: Heating Capacity ARWB432BA2 / ARWN432BA2

Combination Ratio (%) (Capacity index)	Inlet Water Temperature (°F)	Water Flow Rate (gpm)	Indoor Unit Entering Air Wet Bulb Temperature °F											
			61		65		68		70		72		75	
			TC MBh	PI kW	TC MBh	PI kW	TC MBh	PI kW	TC MBh	PI kW	TC MBh	PI kW	TC MBh	PI kW
70	23	63.6	157.5	16.85	148.0	16.04	139.6	15.54	138.4	14.61	137.5	14.11	135.0	12.83
		126.6	178.2	18.29	167.5	17.40	158.0	16.86	156.6	15.86	155.6	15.32	152.7	13.92
		158.4	196.9	19.72	185.0	18.77	174.5	18.19	172.9	17.10	171.8	16.52	168.7	15.02
	32	63.6	273.8	24.23	253.3	23.06	235.1	22.35	231.0	21.01	227.5	20.30	219.2	18.45
		126.6	280.2	24.51	259.2	23.33	240.6	22.61	236.4	21.26	232.8	20.53	224.4	18.66
		158.4	284.5	24.51	263.2	23.33	244.3	22.61	240.0	21.26	236.4	20.53	227.8	18.66
	41	63.6	376.9	26.43	357.1	25.16	339.7	24.38	332.4	22.92	317.5	22.14	302.6	20.12
		126.6	380.2	26.97	359.8	25.67	339.9	24.87	332.4	23.39	317.5	22.59	302.6	20.54
		158.4	380.2	27.17	359.3	25.85	339.9	25.05	332.4	23.56	317.5	22.75	302.6	20.68
	50	63.6	378.5	24.17	358.2	22.85	339.8	22.00	332.4	20.81	317.5	19.97	302.6	18.28
		126.6	380.2	23.98	359.6	22.65	339.9	21.79	332.4	20.82	317.5	19.96	302.6	18.25
		158.4	380.2	24.08	359.3	22.74	339.9	21.88	332.4	20.90	317.5	19.82	302.6	18.33
	59	63.6	380.2	21.90	359.3	20.54	339.9	19.62	332.4	18.71	317.5	17.80	302.6	16.43
		126.6	380.2	20.99	359.3	19.62	339.9	18.71	332.4	18.25	317.5	17.34	302.6	15.97
		158.4	380.2	20.99	359.3	19.62	339.9	18.71	332.4	18.25	317.5	16.88	302.6	15.97
	68	63.6	380.2	18.25	359.3	17.34	339.9	16.88	332.4	16.43	317.5	15.52	302.6	14.60
		126.6	380.2	17.80	359.3	16.88	339.9	16.43	332.4	15.97	317.5	15.06	302.6	14.15
		158.4	380.2	17.80	359.3	16.88	339.9	16.43	332.4	15.52	317.5	15.06	302.6	13.69
	77	63.6	380.2	16.43	359.3	15.52	339.9	14.60	332.4	14.15	317.5	13.23	302.6	12.32
		126.6	380.2	15.97	359.3	15.06	339.9	14.15	332.4	13.69	317.5	13.23	302.6	12.32
		158.4	380.2	15.52	359.3	14.60	339.9	14.15	332.4	13.69	317.5	12.78	302.6	12.32
	86	63.6	380.2	14.60	359.3	13.69	339.9	12.78	332.4	12.32	317.5	11.86	302.6	10.95
		126.6	380.2	14.15	359.3	13.23	339.9	12.32	332.4	12.32	317.5	11.41	302.6	10.95
		158.4	380.2	14.15	359.3	13.23	339.9	12.32	332.4	11.86	317.5	11.41	302.6	10.95
	95	63.6	380.2	13.23	359.3	12.32	339.9	11.41	332.4	11.41	317.5	10.50	302.6	10.04
		126.6	380.2	12.78	359.3	11.86	339.9	11.41	332.4	10.95	317.5	10.50	302.6	9.58
		158.4	380.2	12.78	359.3	11.86	339.9	10.95	332.4	10.95	317.5	10.50	302.6	9.58
	104	63.6	380.2	12.32	359.3	11.41	339.9	10.50	332.4	10.04	317.5	9.58	302.6	9.13
		126.6	380.2	11.86	359.3	10.95	339.9	10.04	332.4	10.04	317.5	9.58	302.6	8.67
		158.4	380.2	11.86	359.3	10.95	339.9	10.04	332.4	9.58	317.5	9.13	302.6	8.67
	113	63.6	380.2	11.41	359.3	10.50	339.9	9.58	332.4	8.67	317.5	8.67	302.6	8.21
		126.6	380.2	10.95	359.3	10.04	339.9	8.67	332.4	9.13	317.5	8.67	302.6	7.76
		158.4	380.2	10.95	359.3	10.04	339.9	9.13	332.4	8.21	317.5	7.76	302.6	7.76
60	23	63.6	135.3	13.69	126.5	13.19	120.0	12.65	118.5	11.76	118.1	11.58	115.7	10.34
		126.6	153.1	14.86	143.1	14.31	135.8	13.73	134.1	12.76	133.7	12.57	130.9	11.22
		158.4	169.1	16.02	158.1	15.43	150.0	14.80	148.1	13.76	147.6	13.55	144.6	12.10
	32	63.6	235.1	19.69	216.5	18.96	202.1	18.19	197.9	16.91	195.5	16.65	187.9	14.86
		126.6	240.6	19.92	221.5	19.18	206.9	18.40	202.5	17.11	200.0	16.85	192.3	15.03
		158.4	244.3	19.92	224.9	19.18	210.0	18.40	205.6	17.11	203.1	16.85	195.3	15.03
	41	63.6	323.7	21.48	305.3	20.68	292.0	19.84	284.7	18.45	272.8	18.16	259.4	16.21
		126.6	326.5	21.91	307.6	21.11	292.2	20.25	284.7	18.82	272.8	18.53	259.4	16.54
		158.4	326.5	22.07	307.1	21.26	292.2	20.39	284.7	18.96	272.8	18.67	259.4	16.66
	50	63.6	325.1	19.64	306.2	18.78	292.1	17.91	284.7	16.75	272.8	16.38	259.4	14.72
		126.6	326.5	19.63	307.3	18.77	292.2	17.88	284.7	16.94	272.8	16.34	259.4	14.89
		158.4	326.5	19.71	307.1	18.61	292.2	17.73	284.7	16.78	272.8	16.18	259.4	14.72
	59	63.6	326.5	17.80	307.1	16.88	292.2	15.97	284.7	15.06	272.8	14.60	259.4	13.23
		126.6	326.5	17.34	307.1	16.43	292.2	15.52	284.7	15.06	272.8	14.15	259.4	13.23
		158.4	326.5	17.34	307.1	15.97	292.2	15.06	284.7	14.60	272.8	13.69	259.4	12.78
	68	63.6	326.5	15.52	307.1	14.60	292.2	13.69	284.7	13.23	272.8	12.78	259.4	11.86
		126.6	326.5	15.06	307.1	14.15	292.2	13.23	284.7	12.78	272.8	12.32	259.4	11.41
		158.4	326.5	15.06	307.1	14.15	292.2	13.23	284.7	12.78	272.8	12.32	259.4	11.41
	77	63.6	326.5	13.69	307.1	12.78	292.2	11.86	284.7	11.86	272.8	10.95	259.4	10.50
		126.6	326.5	13.23	307.1	12.32	292.2	11.86	284.7	11.41	272.8	10.95	259.4	10.04
		158.4	326.5	13.23	307.1	12.32	292.2	11.41	284.7	11.41	272.8	10.95	259.4	10.04
	86	63.6	326.5	12.32	307.1	11.41	292.2	10.95	284.7	10.50	272.8	10.04	259.4	9.58
		126.6	326.5	11.86	307.1	10.95	292.2	10.50	284.7	10.04	272.8	9.58	259.4	9.13
		158.4	326.5	11.86	307.1	10.95	292.2	10.50	284.7	10.04	272.8	9.58	259.4	9.13
	95	63.6	326.5	10.95	307.1	10.50	292.2	9.58	284.7	9.58	272.8	9.13	259.4	8.67
		126.6	326.5	10.95	307.1	10.04	292.2	9.58	284.7	9.13	272.8	8.67	259.4	8.21
		158.4	326.5	10.95	307.1	10.04	292.2	9.13	284.7	9.13	272.8	8.67	259.4	8.21
	104	63.6	326.5	10.04	307.1	9.58	292.2	8.67	284.7	8.67	272.8	8.21	259.4	7.76
		126.6	326.5	10.04	307.1	9.13	292.2	8.67	284.7	8.21	272.8	7.76	259.4	7.76
		158.4	326.5	10.04	307.1	9.13	292.2	8.67	284.7	8.21	272.8	7.76	259.4	7.76
	113	63.6	326.5	9.13	307.1	8.67	292.2	7.76	284.7	7.76	272.8	7.30	259.4	6.84
		126.6	326.5	9.13	307.1	8.21	292.2	7.76	284.7	7.30	272.8	6.84	259.4	7.30
		158.4	326.5	9.13	307.1	8.21	292.2	8.21	284.7	7.30	272.8	6.84	259.4	7.30

TC = Total Heating Capacity (MBh).
PI = Power input (KW).

Power input (KW) includes compressor(s) and controls.
Test condition based on 25 feet of equivalent refrigerant piping and no change in elevation between indoor unit and water source unit.

Due to our policy of continuous product innovation, some specifications may change without notification.
©LG Electronics U.S.A., Inc., Englewood Cliffs, NJ. All rights reserved. "LG" is a registered trademark of LG Corp.

Table 36e: Heating Capacity ARWB432BA2 / ARWN432BA2

Combination Ratio (%) (Capacity index)	Inlet Water Temperature (°F)	Water Flow Rate (gpm)	Indoor Unit Entering Air Wet Bulb Temperature °F											
			61		65		68		70		72		75	
			TC MBh	PI kW	TC MBh	PI kW	TC MBh	PI kW	TC MBh	PI kW	TC MBh	PI kW	TC MBh	PI kW
50	23	63.6	112.4	10.88	105.6	10.34	99.8	9.76	98.6	9.27	98.1	8.69	96.4	8.20
		126.6	127.2	11.81	119.5	11.22	112.9	10.59	111.6	10.06	111.0	9.43	109.1	8.90
		158.4	140.5	12.74	132.0	12.10	124.8	11.42	123.3	10.84	122.6	10.16	120.5	9.59
	32	63.6	195.4	15.65	180.7	14.86	168.1	14.03	164.7	13.33	162.3	12.49	156.6	11.79
		126.6	200.0	15.83	185.0	15.03	172.0	14.20	168.6	13.48	166.1	12.63	160.3	11.92
		158.4	203.0	15.83	187.8	15.03	174.7	14.20	171.1	13.48	168.7	12.63	162.7	11.92
	41	63.6	269.0	17.07	254.9	16.21	242.9	15.31	237.0	14.53	226.6	13.62	216.2	12.86
		126.6	271.3	17.42	256.8	16.54	243.0	15.62	237.0	14.83	226.6	13.90	216.2	13.12
		158.4	271.3	17.54	256.4	16.66	243.0	15.73	237.0	14.94	226.6	14.00	216.2	13.21
	50	63.6	270.2	15.61	255.6	14.72	242.9	13.81	237.0	13.20	226.6	12.29	216.2	11.68
		126.6	271.3	15.55	256.6	14.66	243.0	13.74	237.0	13.12	226.6	12.43	216.2	11.58
		158.4	271.3	15.62	256.4	14.72	243.0	13.80	237.0	13.17	226.6	12.25	216.2	11.63
	59	63.6	271.3	14.15	256.4	13.23	243.0	12.32	237.0	11.86	226.6	10.95	216.2	10.50
		126.6	271.3	13.69	256.4	12.78	243.0	11.86	237.0	11.41	226.6	10.95	216.2	10.04
		158.4	271.3	13.69	256.4	12.78	243.0	11.86	237.0	11.41	226.6	10.50	216.2	10.04
	68	63.6	271.3	12.32	256.4	11.41	243.0	10.95	237.0	10.50	226.6	10.04	216.2	9.13
		126.6	271.3	11.86	256.4	10.95	243.0	10.50	237.0	10.04	226.6	9.58	216.2	9.13
		158.4	271.3	11.86	256.4	10.95	243.0	10.50	237.0	10.04	226.6	9.58	216.2	9.13
	77	63.6	271.3	10.95	256.4	10.04	243.0	9.58	237.0	9.13	226.6	8.67	216.2	8.21
		126.6	271.3	10.50	256.4	10.04	243.0	9.13	237.0	9.13	226.6	8.67	216.2	8.21
		158.4	271.3	10.50	256.4	10.04	243.0	9.13	237.0	9.13	226.6	8.67	216.2	8.21
	86	63.6	271.3	10.04	256.4	9.13	243.0	8.67	237.0	8.21	226.6	8.21	216.2	7.76
		126.6	271.3	9.58	256.4	8.67	243.0	8.21	237.0	8.21	226.6	7.76	216.2	7.30
		158.4	271.3	9.58	256.4	8.67	243.0	8.21	237.0	8.21	226.6	7.76	216.2	7.30
	95	63.6	271.3	9.13	256.4	8.21	243.0	7.76	237.0	7.76	226.6	7.30	216.2	6.85
		126.6	271.3	8.67	256.4	8.21	243.0	7.76	237.0	7.30	226.6	7.30	216.2	6.85
		158.4	271.3	8.67	256.4	8.21	243.0	7.76	237.0	7.30	226.6	7.30	216.2	6.85
	104	63.6	271.3	8.21	256.4	7.76	243.0	7.30	237.0	6.85	226.6	6.85	216.2	6.39
		126.6	271.3	7.76	256.4	7.30	243.0	6.85	237.0	6.85	226.6	6.39	216.2	6.39
		158.4	271.3	7.76	256.4	7.30	243.0	6.85	237.0	6.85	226.6	6.39	216.2	6.39
	113	63.6	271.3	7.30	256.4	7.30	243.0	6.85	237.0	5.93	226.6	6.39	216.2	5.93
		126.6	271.3	6.84	256.4	6.39	243.0	5.93	237.0	6.39	226.6	5.48	216.2	5.93
		158.4	271.3	6.84	256.4	6.39	243.0	5.93	237.0	6.39	226.6	5.48	216.2	5.93

TC = Total Heating Capacity (MBh).
PI = Power input (KW).
Power input (KW) includes compressor(s) and controls.
Test condition based on 25 feet of equivalent refrigerant piping and no change in elevation between indoor unit and water source unit.

Due to our policy of continuous product innovation, some specifications may change without notification.
©LG Electronics U.S.A., Inc., Englewood Cliffs, NJ. All rights reserved. "LG" is a registered trademark of LG Corp.

ELECTRICAL CHARACTERISTICS

Water Source Units

Table 37: Electrical Characteristics — 208-230V/60Hz/3Ø

Nominal-Tons	Unit Model Number	MCA	MOP	Compressor	Unit	Rated Amps	Maximum Start Current
6	ARWB072BA2 / ARWN072BA2	21	35	A	ARWB072BA2 / ARWN072BA2	16.8	—
12	ARWB144BA2 / ARWN144BA2	42.5	60	A	ARWB144BA2 / ARWN144BA2	20.6	103.9
				B	ARWB144BA2 / ARWN144BA2	16.8	
18	ARWB216BA2 / ARWN216BA2	42.5 + 21	60 + 35	A	ARWB144BA2 / ARWN144BA2	20.6	109.8
					ARWB072BA2 / ARWN072BA2	16.8	
				B	ARWB144BA2 / ARWN144BA2	16.8	
					ARWB072BA2 / ARWN072BA2	—	
24	ARWB288BA2 / ARWN288BA2	42.5 + 42.5	60 + 60	A	ARWB144BA2 / ARWN144BA2	20.6	128.5
					ARWB144BA2 / ARWN144BA2	20.6	
				B	ARWB144BA2 / ARWN144BA2	16.8	
					ARWB144BA2 / ARWN144BA2	16.8	
30	ARWB360BA2 / ARWN360BA2	42.5 + 42.5 + 21	60 + 60 + 35	A	ARWB144BA2 / ARWN144BA2	20.6	134.4
					ARWB144BA2 / ARWN144BA2	20.6	
					ARWB072BA2 / ARWN072BA2	16.8	
				B	ARWB144BA2 / ARWN144BA2	16.8	
					ARWB144BA2 / ARWN144BA2	16.8	
					ARWB072BA2 / ARWN072BA2	—	
36	ARWB432BA2 / ARWN432BA2	42.5 + 42.5 + 42.5	60 + 60 + 60	A	ARWB144BA2 / ARWN144BA2	20.6	153.1
					ARWB144BA2 / ARWN144BA2	20.6	
					ARWB144BA2 / ARWN144BA2	20.6	
				B	ARWB144BA2 / ARWN144BA2	16.8	
					ARWB144BA2 / ARWN144BA2	16.8	
					ARWB144BA2 / ARWN144BA2	16.8	

MCA = Minimum Circuit Ampacity.
MOP = Maximum Overcurrent Protection is calculated as follows: (Largest motor FLA x 2.25) + (Sum of other motor FLA) rounded down to the nearest standard fuse size.
Allowable voltage range is between 208–230 volts only (tolerance is 10%).
Maximum allowable voltage unbalanced is 2%.
Power wiring to be sized to meet local or NEC codes.
Measurements are taken with no attenuation and units operating at full load nominal operating condition.
Measurements are taken 4.9 feet above the finished floor and a distance of 3.3 feet from the face of the fan discharge.

Due to our policy of continuous product innovation, some specifications may change without notification.
©LG Electronics U.S.A., Inc., Englewood Cliffs, NJ. All rights reserved. "LG" is a registered trademark of LG Corp.

ELECTRICAL CHARACTERISTICS

Water Source Units

Table 38: Electrical Characteristics — 460V/60Hz/3Ø

Nominal-Tons	Unit Model Number	MCA	MOP	Compressor	Unit	Rated Amps	Maximum Start Current
8	ARWB096DA2 / ARWN096DA2	13	20	A	ARWB096DA2 / ARWN096DA2	10.4	—
16	ARWB192DA2 / ARWN192DA2	26.2	35	A	ARWB192DA2 / ARWN192DA2	12.7	92.8
				B	ARWB192DA2 / ARWN192DA2	10.4	
24	ARWB290DA2 / ARWN290DA2	26.2 + 13	35 + 20	A	ARWB192DA2 / ARWN192DA2	12.7	98.6
					ARWB096DA2 / ARWN096DA2	10.4	
				B	ARWB192DA2 / ARWN192DA2	10.4	
					ARWB096DA2 / ARWN096DA2	—	
32	ARWB390DA2 / ARWN390DA2	26.2 + 26.2	35 + 35	A	ARWB192DA2 / ARWN192DA2	12.4	109.6
					ARWB192DA2 / ARWN192DA2	12.4	
				B	ARWB192DA2 / ARWN192DA2	10.4	
					ARWB192DA2 / ARWN192DA2	10.4	
40	ARWB480DA2 / ARWN480DA2	26.2 + 26.2 + 13	35 + 35 + 20	A	ARWB192DA2 / ARWN192DA2	12.4	115.4
					ARWB192DA2 / ARWN192DA2	12.4	
					ARWB096DA2 / ARWN096DA2	10.4	
				B	ARWB192DA2 / ARWN192DA2	10.4	
					ARWB192DA2 / ARWN192DA2	10.4	
					ARWB096DA2 / ARWN096DA2	—	
48	ARWB580DA2 / ARWN580DA2	26.2 + 26.2 + 26.2	35 + 35 + 35	A	ARWB192DA2 / ARWN192DA2	12.4	126.4
					ARWB192DA2 / ARWN192DA2	12.4	
					ARWB192DA2 / ARWN192DA2	12.4	
				B	ARWB192DA2 / ARWN192DA2	10.4	
					ARWB192DA2 / ARWN192DA2	10.4	
					ARWB192DA2 / ARWN192DA2	10.4	

MCA = Minimum Circuit Ampacity.
MOP = Maximum Overcurrent Protection is calculated as follows: (Largest motor FLA x 2.25) + (Sum of other motor FLA) rounded down to the nearest standard fuse size.
Allowable voltage range is between 208–230 volts only (tolerance is 10%).
Maximum allowable voltage unbalanced is 2%.
Power wiring to be sized to meet local or NEC codes.
Measurements are taken with no attenuation and units operating at full load nominal operating condition.
Measurements are taken 4.9 feet above the finished floor and a distance of 3.3 feet from the face of the fan discharge.

Table 39: Electrical Characteristics—Heat Recovery Units 208-230V/60Hz/3Ø

Nom.Tons	Unit Model No.	MCA
Heat Recovery Units 208-230V/60Hz/3Ø		
39.7 lbs	PRHR021A	0.1
44.1 lbs	PRHR031A	0.15
48.5 lbs	PRHR041A	0.2

Due to our policy of continuous product innovation, some specifications may change without notification.
©LG Electronics U.S.A., Inc., Englewood Cliffs, NJ. All rights reserved. "LG" is a registered trademark of LG Corp.

ACOUSTIC DATA

Water Source Units

Table 40: Outdoor Unit Sound Pressure Level

Model (208-230V/60Hz/3Ø)	Sound Level dB(A)
ARWB072BA2 / ARWN072BA2	49
ARWB144BA2 / ARWN144BA2	50
ARWB216BA2 / ARWN216BA2	51
ARWB288BA2 / ARWN288BA2	52
ARWB360BA2 / ARWN360BA2	53
ARWB432BA2 / ARWN432BA2	54
Model (460V/60Hz/3Ø)	Sound Level dB(A)
ARWB096DA2 / ARWN096DA2	51
ARWB192DA2 / ARWN192DA2	51
ARWB290DA2 / ARWN290DA2	53
ARWB390DA2 / ARWN390DA2	54
ARWB480DA2 / ARWN480DA2	55
ARWB580DA2 / ARWN580DA2	56

Measurements taken with no attenuation and units operating at full load normal operating condition.
Measurement taken 3.3 feet above finished floor and at a distance of 3.3 feet from face of unit. See Figure 1.
Sound power levels are measured in dB(A)±3.
Tested in anechoic chamber per ISO Standard 1996.

Figure 1: Sound pressure measurements

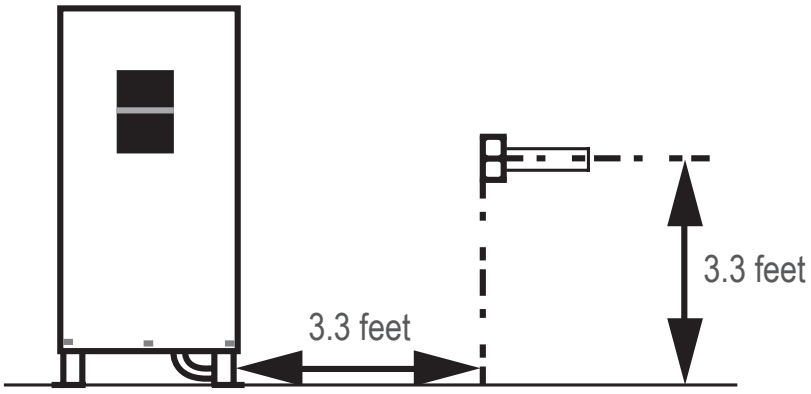

Due to our policy of continuous product innovation, some specifications may change without notification.
©LG Electronics U.S.A., Inc., Englewood Cliffs, NJ. All rights reserved. "LG" is a registered trademark of LG Corp.

SOUND PRESSURE LEVEL

ARWB072BA2– ARWB432BA2 / ARWN072BA2– ARWN432BA2

Figure 2: ARWB072BA2 / ARWN072BA2

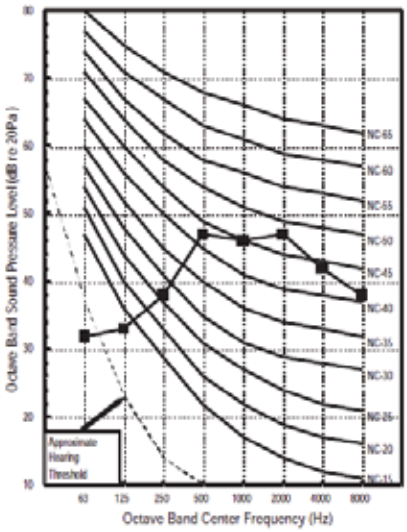

Figure 3: ARWB144BA2 / ARWN144BA2

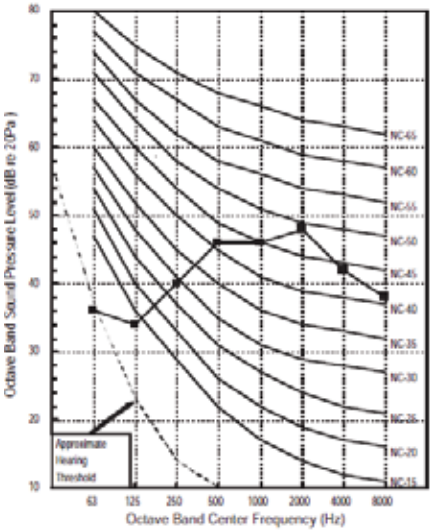

Figure 4: ARWB216BA2 / ARWN216BA2

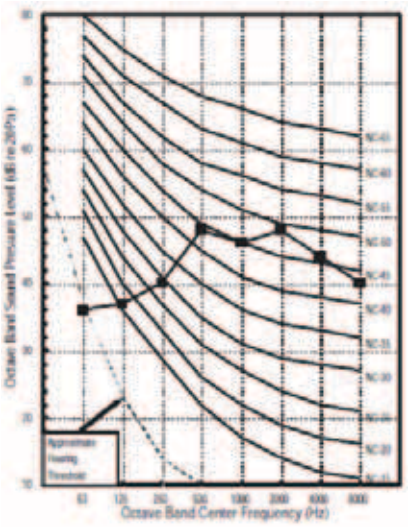

Figure 5: ARWB288BA2 / ARWN288BA2

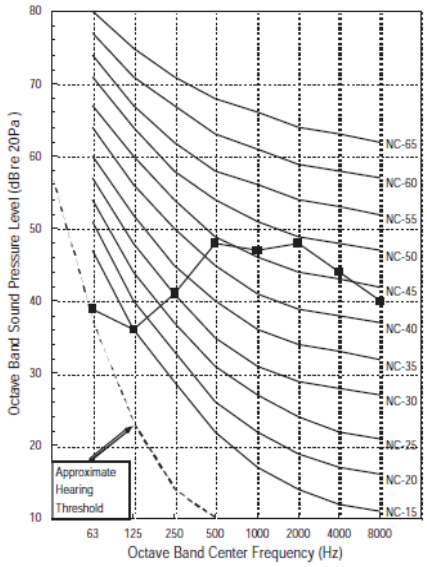

Figure 6: ARWB360BA2 / ARWN360BA2

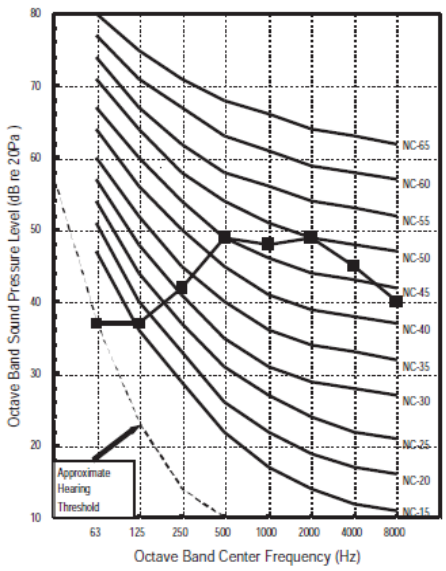

Figure 7: ARWB432BA2 / ARWN432BA2

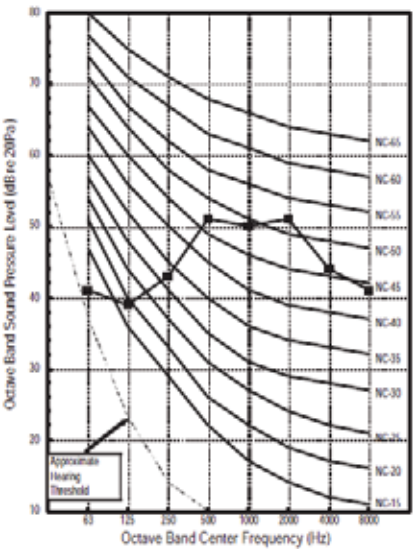

Due to our policy of continuous product innovation, some specifications may change without notification.
©LG Electronics U.S.A., Inc., Englewood Cliffs, NJ. All rights reserved. "LG" is a registered trademark of LG Corp.

SOUND PRESSURE LEVEL

ARWB096DA2–ARWB580DA2 / ARWN096DA2–ARWN580DA2

Figure 8: ARWB096DA2 / ARWN096DA2

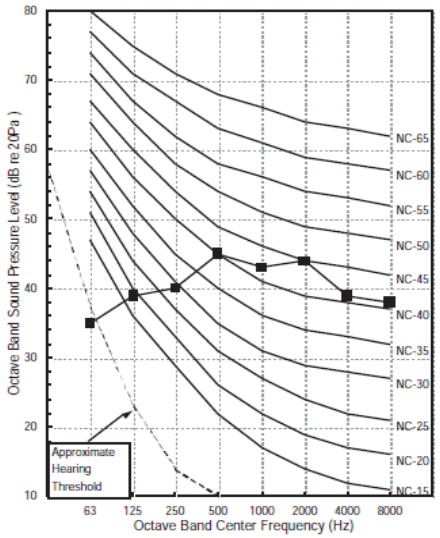

Figure 9: ARWB192DA2 / ARWN192DA2

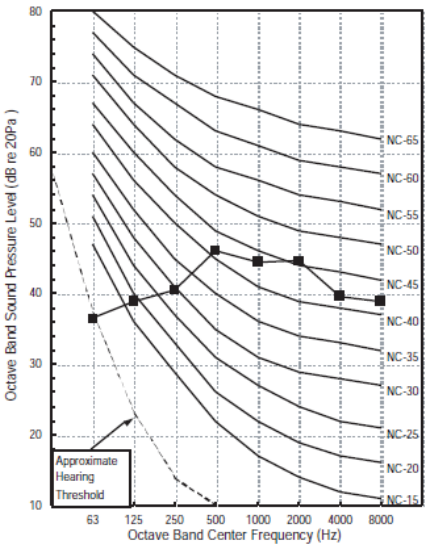

Figure 10: ARWB290DA2 / ARWN290DA2

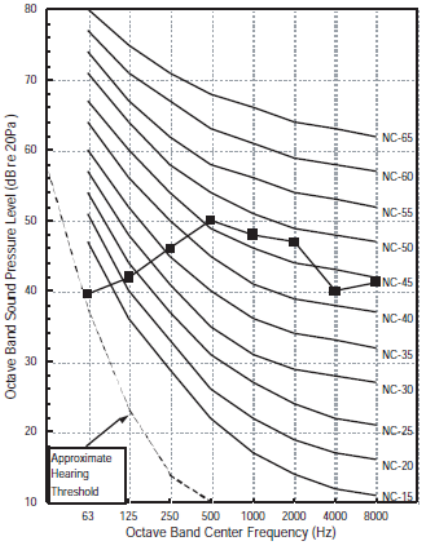

Figure 11: ARWB390DA2 / ARWN390DA2

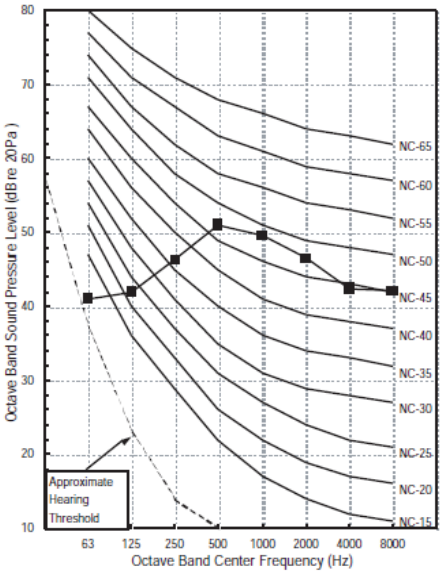

Figure 12: ARWB480DA2 / ARWN480DA2

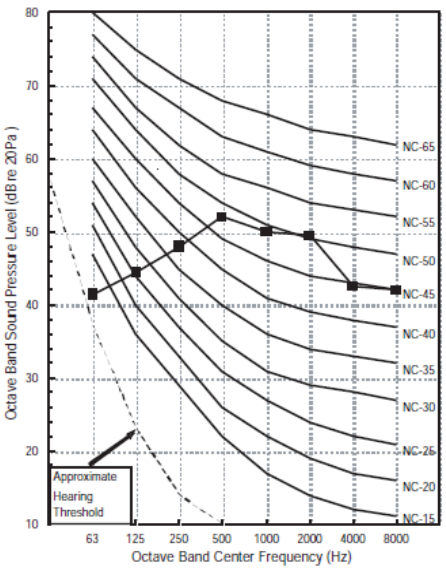

Figure 13: ARWB580DA2 / ARWN580DA2

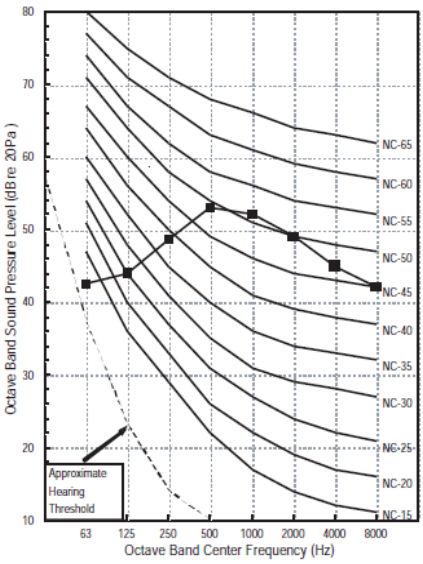

Due to our policy of continuous product innovation, some specifications may change without notification.
©LG Electronics U.S.A., Inc., Englewood Cliffs, NJ. All rights reserved. "LG" is a registered trademark of LG Corp.

Figure 14: ARWB072BA2–ARWB096DA2—Cooling Mode

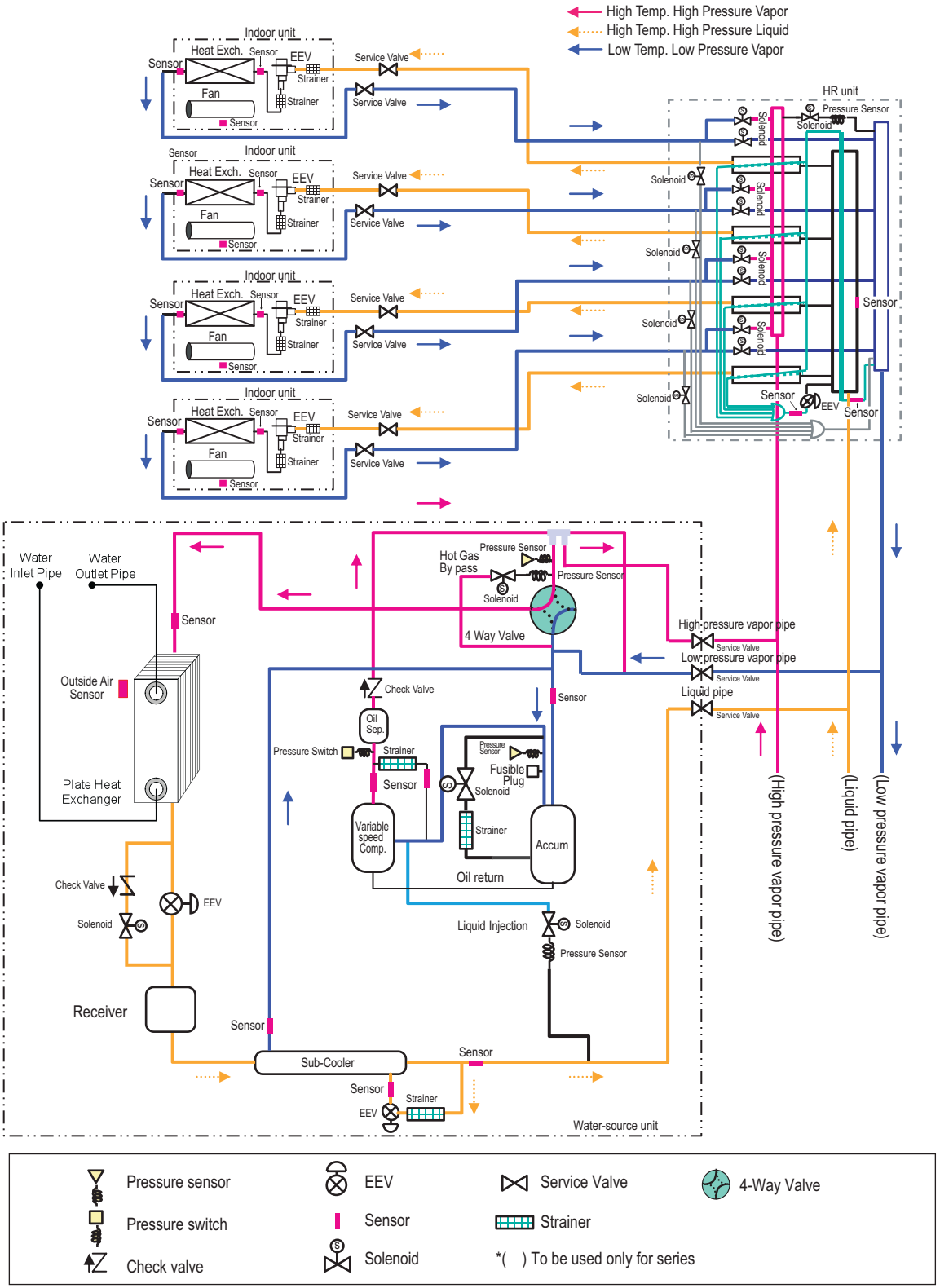

Due to our policy of continuous product innovation, some specifications may change without notification.
©LG Electronics U.S.A., Inc., Englewood Cliffs, NJ. All rights reserved. "LG" is a registered trademark of LG Corp.

REFRIGERANT FLOW DIAGRAMS

ARWB072BA2–ARWB096DA2—Heating Mode

Figure 15: ARWB072BA2–ARWB096DA2—Heating Mode

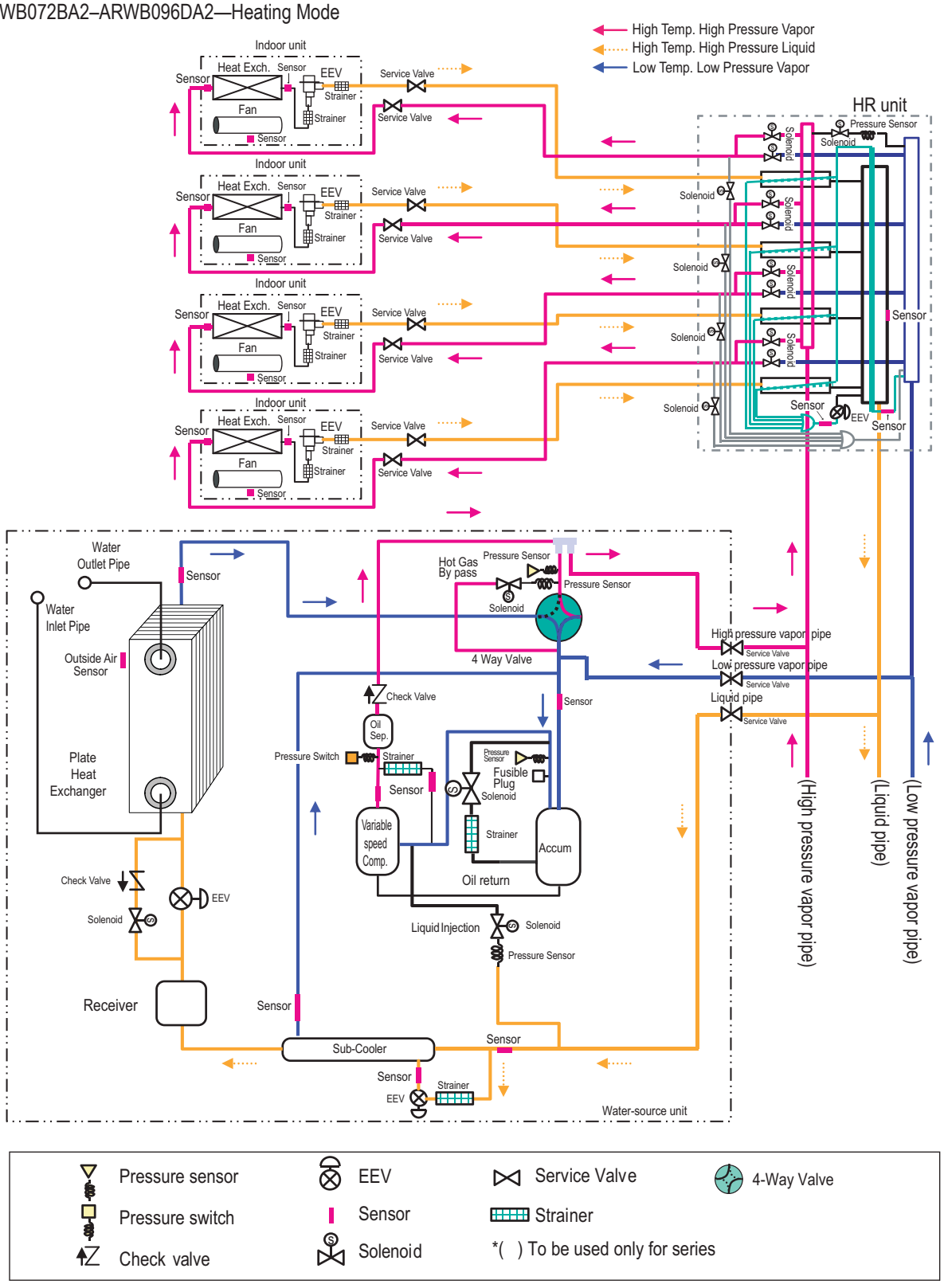

Due to our policy of continuous product innovation, some specifications may change without notification.
©LG Electronics U.S.A., Inc., Englewood Cliffs, NJ. All rights reserved. "LG" is a registered trademark of LG Corp.

Figure 16: ARWB072BA2–ARWB096DA2—Simultaneous Operation Mode 1 (Cooling Based Operation)

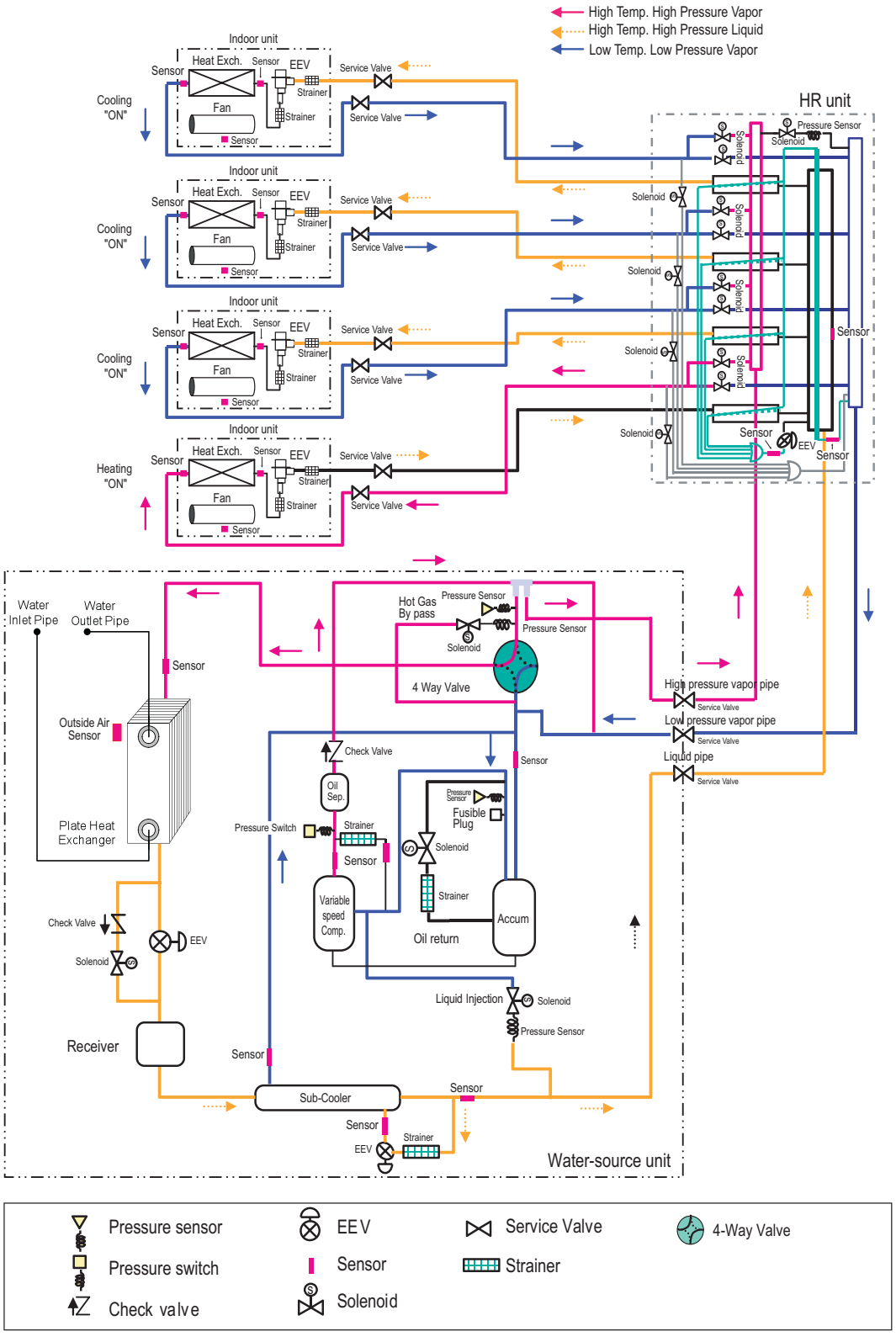

Due to our policy of continuous product innovation, some specifications may change without notification.
©LG Electronics U.S.A., Inc., Englewood Cliffs, NJ. All rights reserved. "LG" is a registered trademark of LG Corp.

REFRIGERANT FLOW DIAGRAMS

ARWB072BA2–ARWB096DA2—Simultaneous Operation Mode 2

Figure 17: ARWB072BA2–ARWB096DA2—Simultaneous Operation Mode 2 (Heating Based Operation)

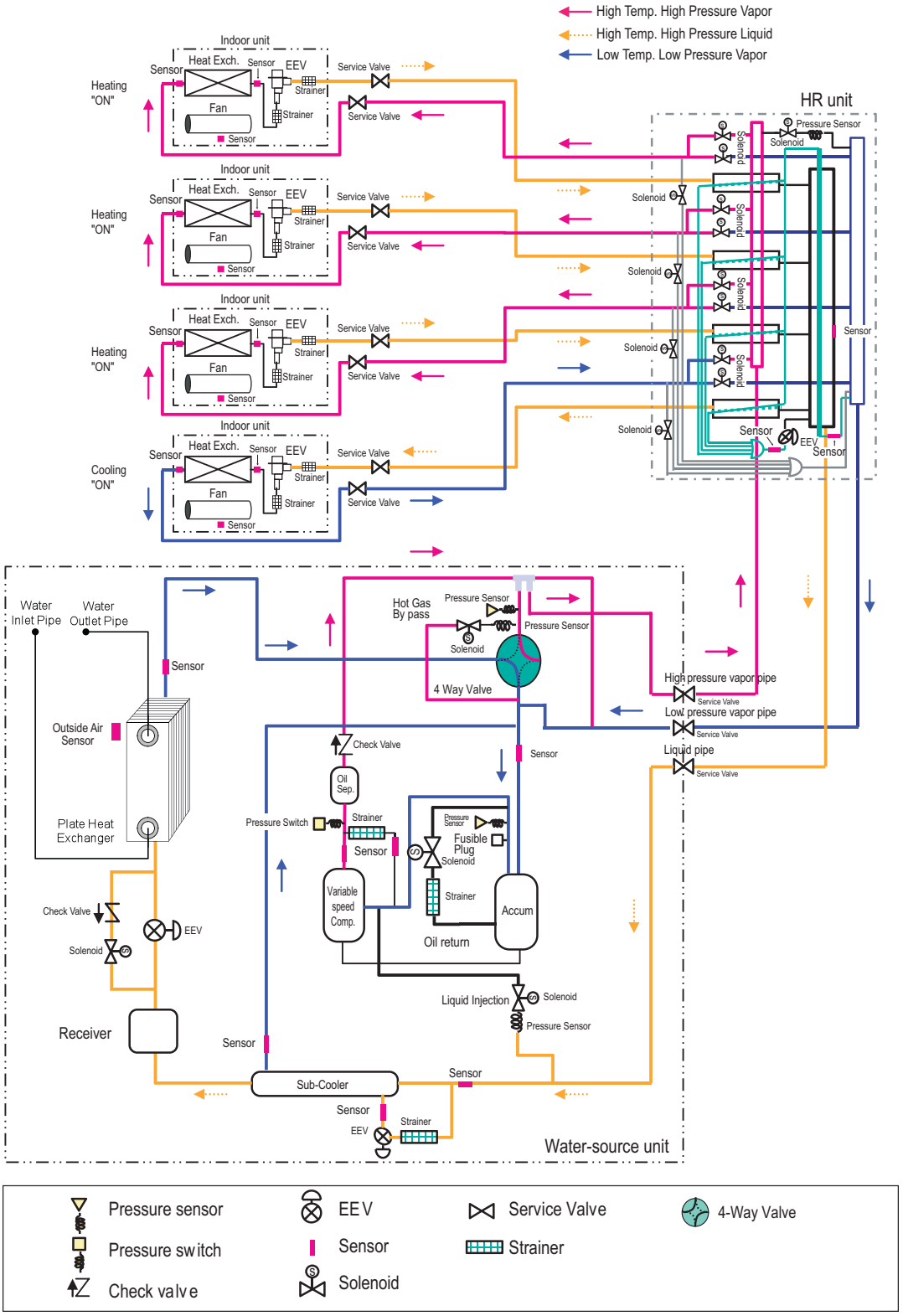

Due to our policy of continuous product innovation, some specifications may change without notification.
©LG Electronics U.S.A., Inc., Englewood Cliffs, NJ. All rights reserved. "LG" is a registered trademark of LG Corp.

REFRIGERANT FLOW DIAGRAMS

ARWB144BA2–ARWB192DA2—Cooling Mode

Figure 18: ARWB144BA2–ARWB192DA2—Cooling Mode

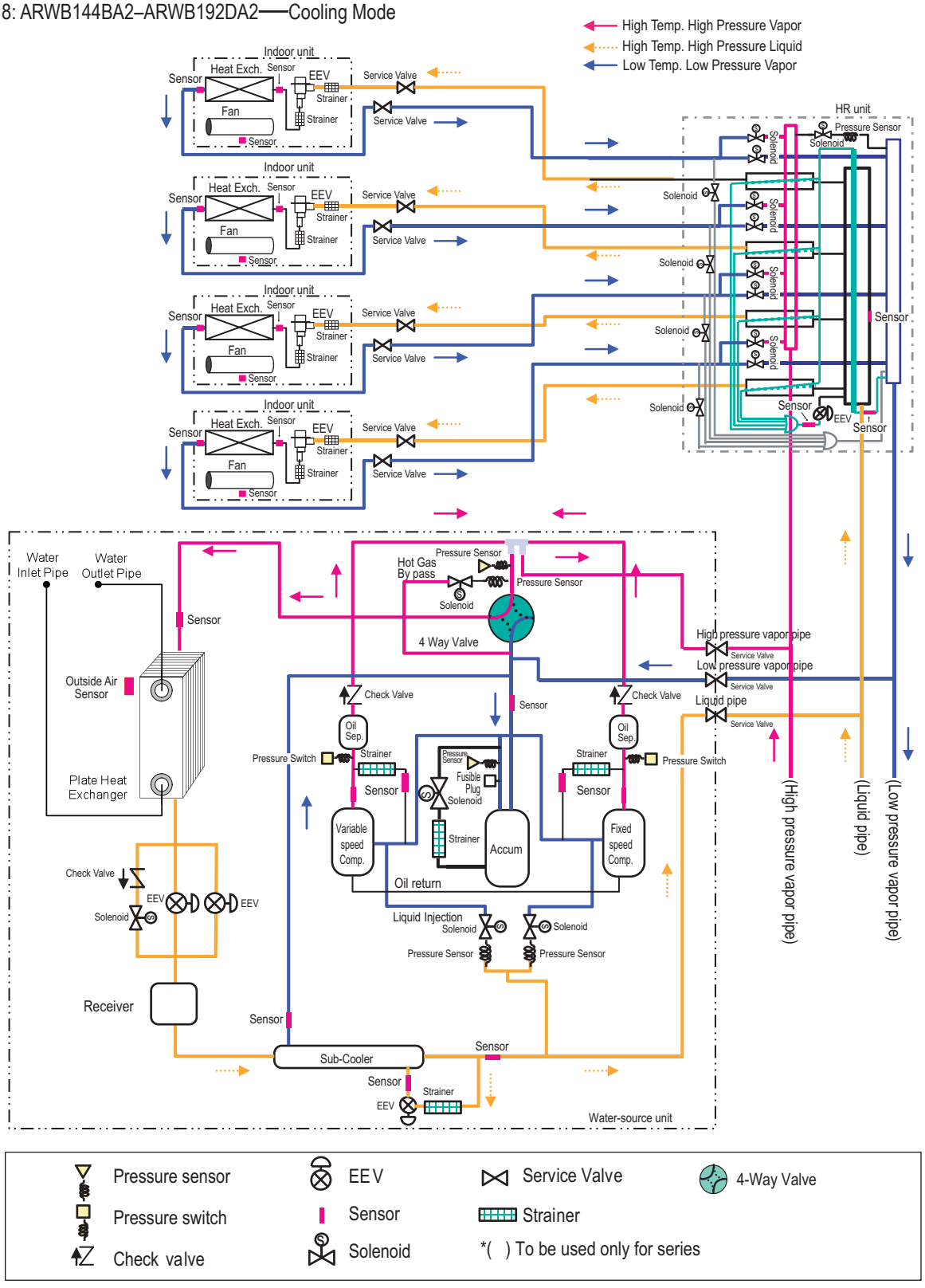

Due to our policy of continuous product innovation, some specifications may change without notification.
©LG Electronics U.S.A., Inc., Englewood Cliffs, NJ. All rights reserved. "LG" is a registered trademark of LG Corp.

REFRIGERANT FLOW DIAGRAMS

ARWB144BA2–ARWB192DA2—Heating Mode

Figure 19: ARWB144BA2–ARWB192DA2—Heating Mode

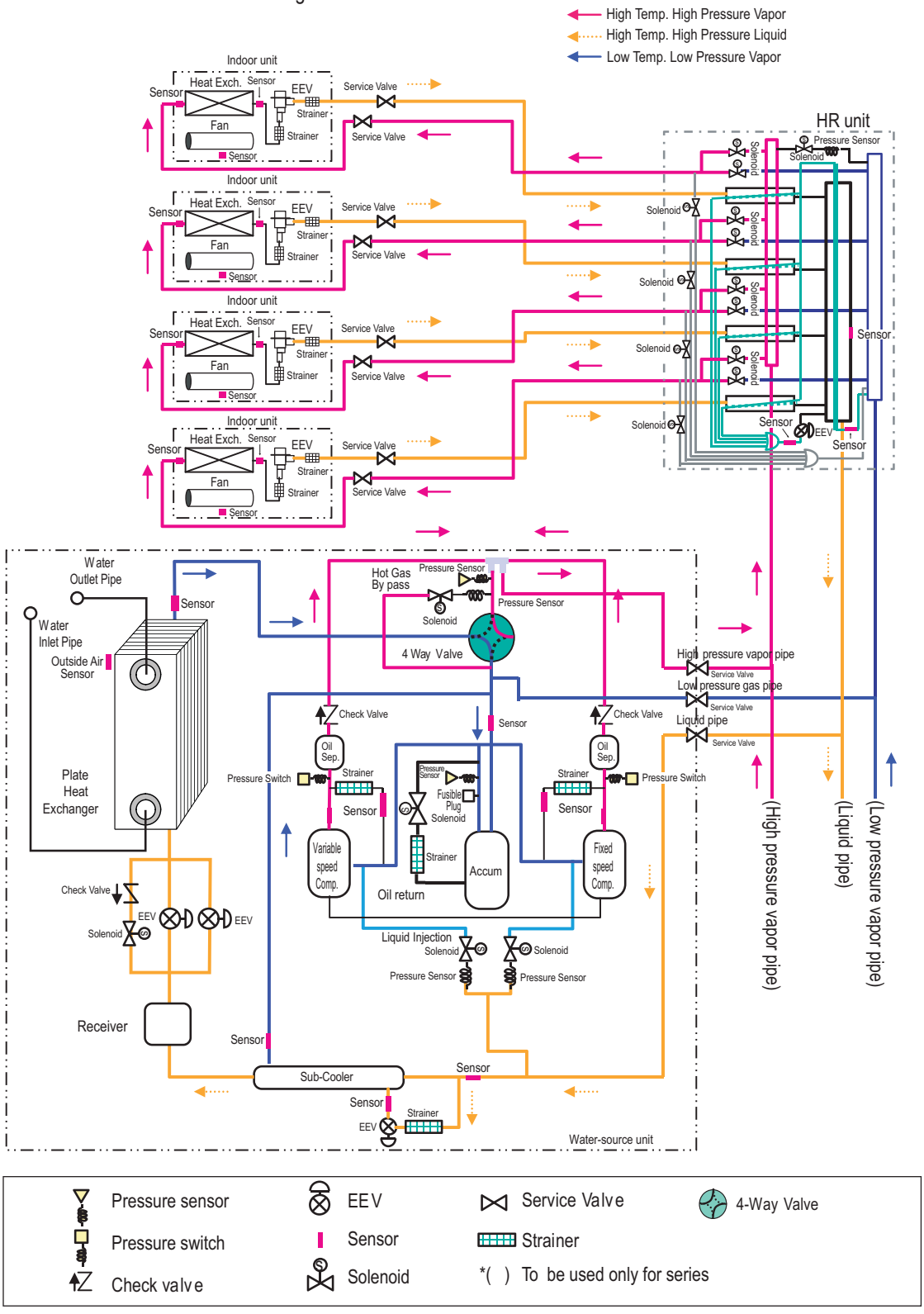

Due to our policy of continuous product innovation, some specifications may change without notification.
©LG Electronics U.S.A., Inc., Englewood Cliffs, NJ. All rights reserved. "LG" is a registered trademark of LG Corp.

Figure 20: ARWB144BA2–ARWB192DA2—Simultaneous Operation Mode 1 (Cooling Based Operation)

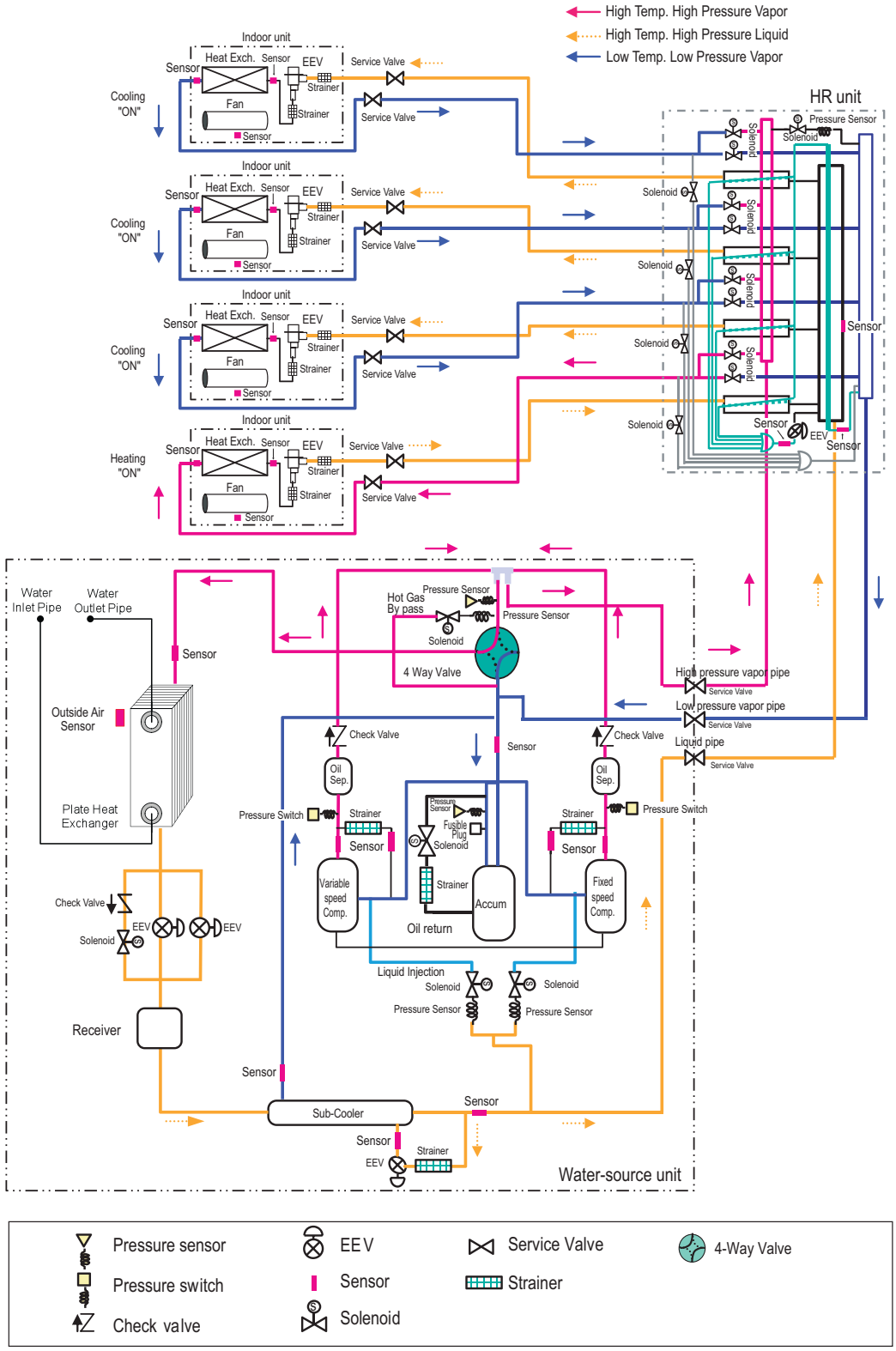

Due to our policy of continuous product innovation, some specifications may change without notification.
©LG Electronics U.S.A., Inc., Englewood Cliffs, NJ. All rights reserved. "LG" is a registered trademark of LG Corp.

REFRIGERANT FLOW DIAGRAMS

ARWB190DA2–ARWB144BA2—Simultaneous Operation Mode 2

Figure 21: ARWB190DA2–ARWB144BA2—Simultaneous Operation Mode 2 (Heating Based Operation)

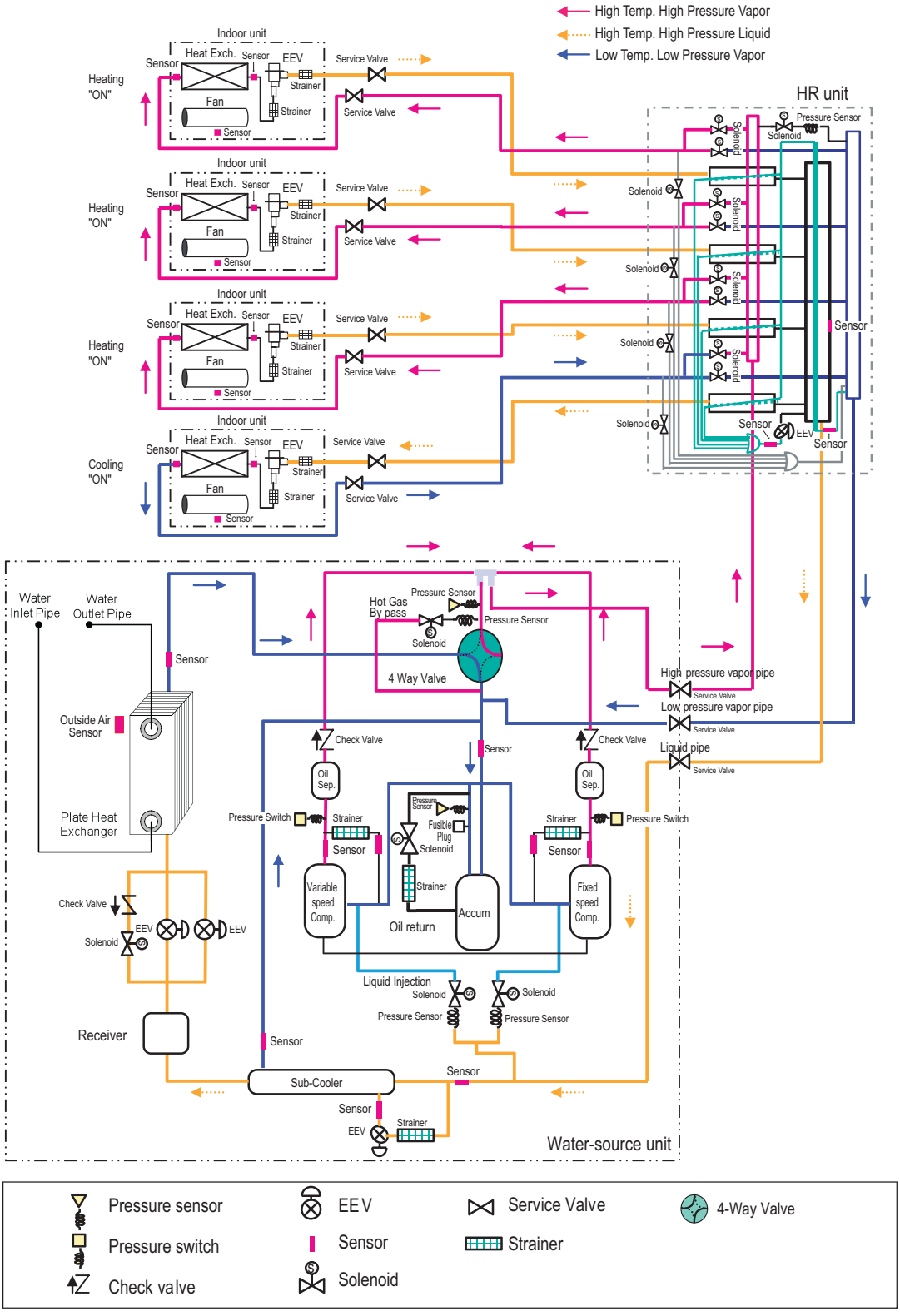

Due to our policy of continuous product innovation, some specifications may change without notification.
©LG Electronics U.S.A., Inc., Englewood Cliffs, NJ. All rights reserved. "LG" is a registered trademark of LG Corp.

REFRIGERANT FLOW DIAGRAMS

ARWN072BA2–ARWN096DA2—Cooling Mode

Figure 22: ARWN072BA2–ARWN096DA2—Cooling Mode

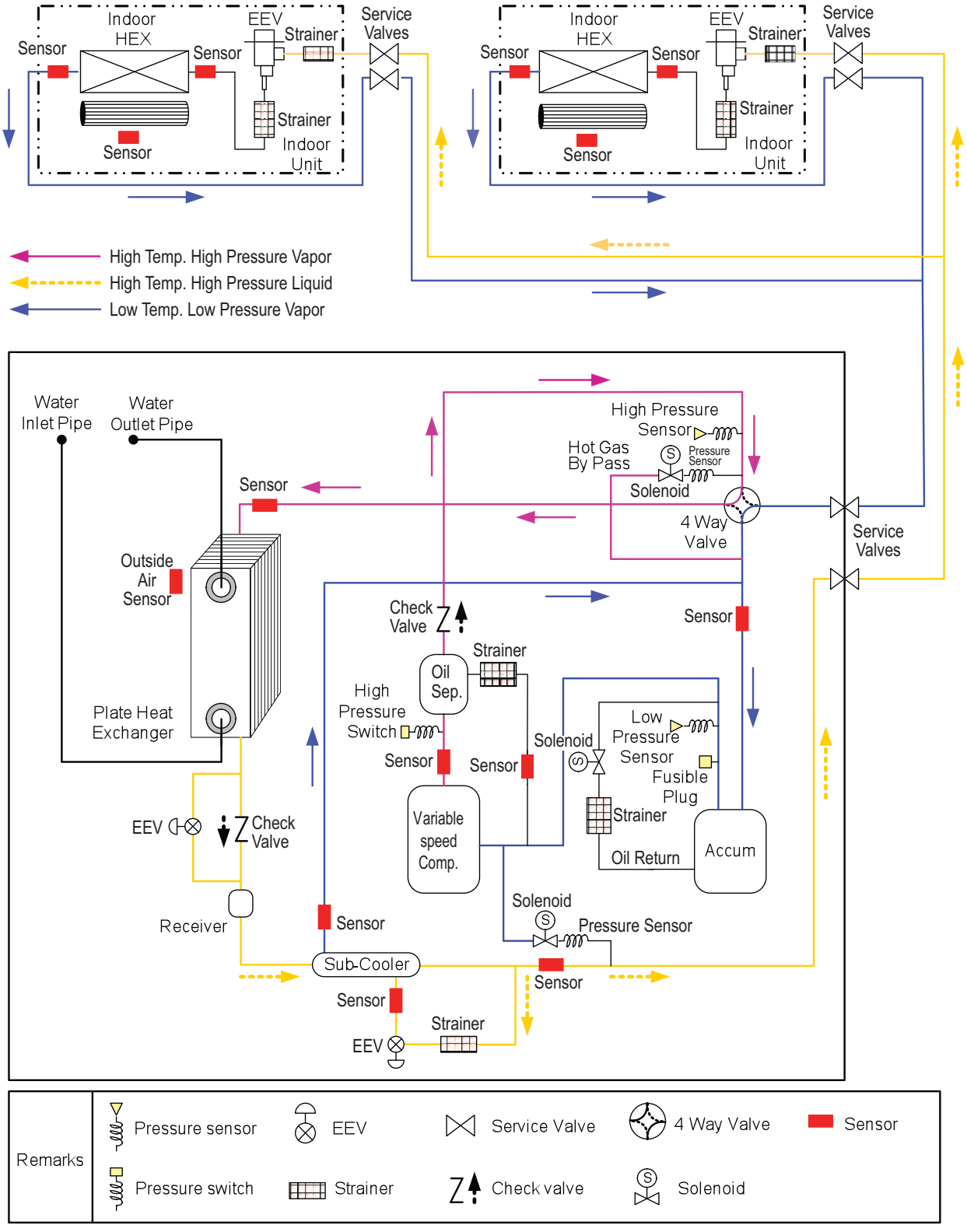

Due to our policy of continuous product innovation, some specifications may change without notification.
©LG Electronics U.S.A., Inc., Englewood Cliffs, NJ. All rights reserved. "LG" is a registered trademark of LG Corp.

REFRIGERANT FLOW DIAGRAMS

ARWN072BA2–ARWN096DA2—Heating Mode

Figure 23: ARWN072BA2–ARWN096DA2—Heating Mode

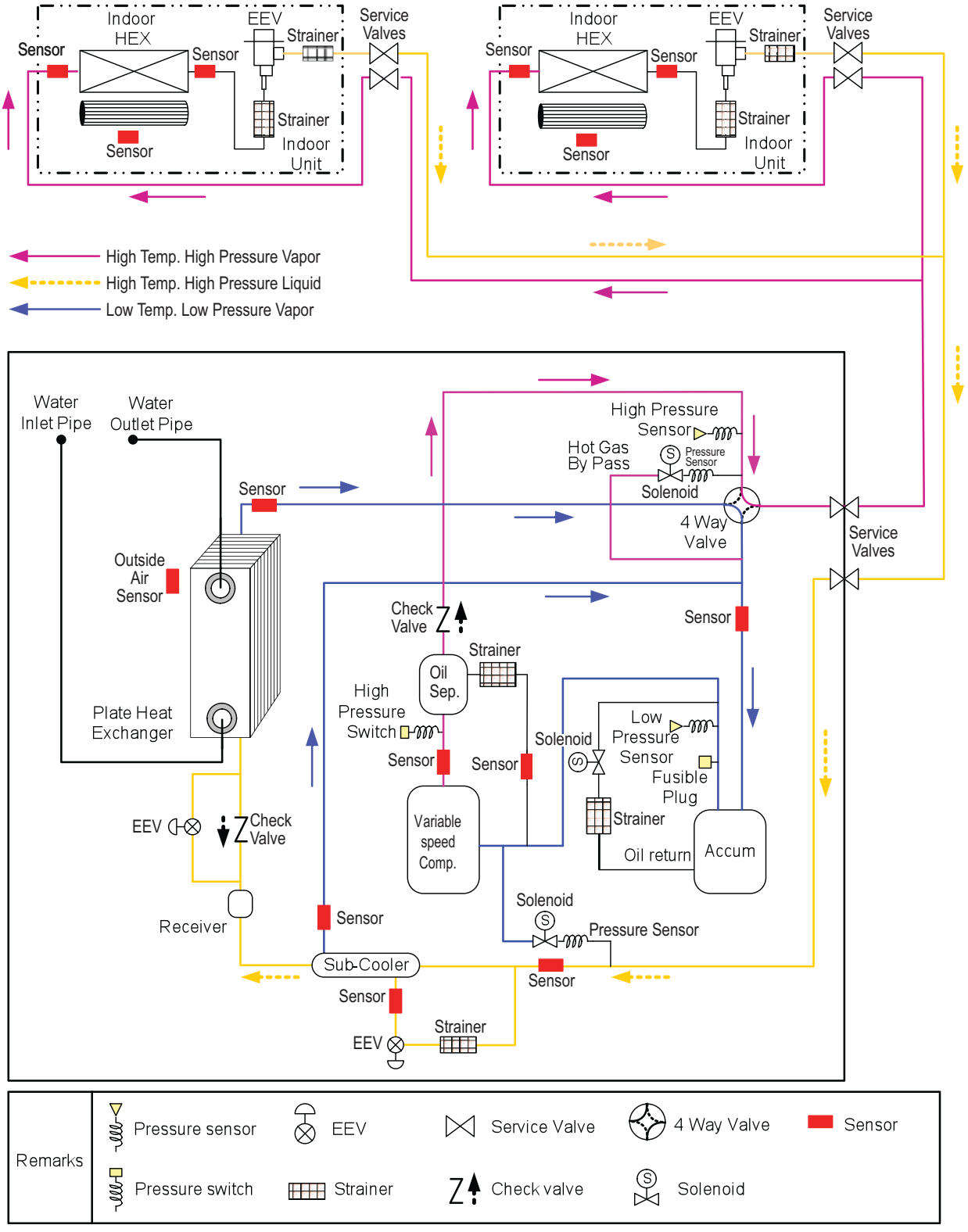

Due to our policy of continuous product innovation, some specifications may change without notification.
©LG Electronics U.S.A., Inc., Englewood Cliffs, NJ. All rights reserved. "LG" is a registered trademark of LG Corp.

REFRIGERANT FLOW DIAGRAMS

ARWN072BA2–ARWN096DA2—Oil Return Operation

Figure 24: ARWN072BA2–ARWN096DA2—Oil Return Operation

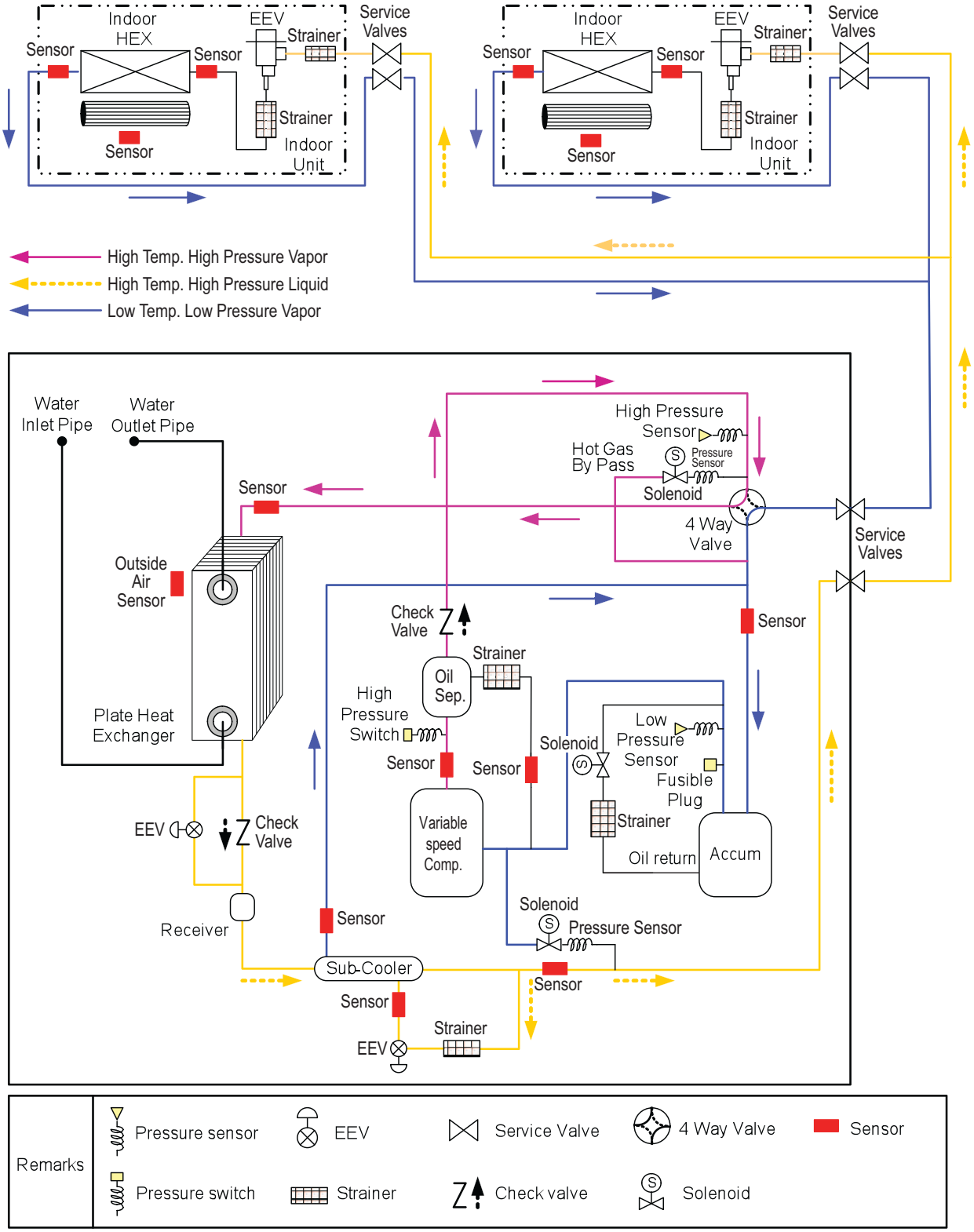

Due to our policy of continuous product innovation, some specifications may change without notification.
©LG Electronics U.S.A., Inc., Englewood Cliffs, NJ. All rights reserved. "LG" is a registered trademark of LG Corp.

REFRIGERANT FLOW DIAGRAMS

ARWN144BA2–ARWN192DA2—Cooling Mode

Figure 25: ARWN144BA2–ARWN192DA2—Cooling Mode

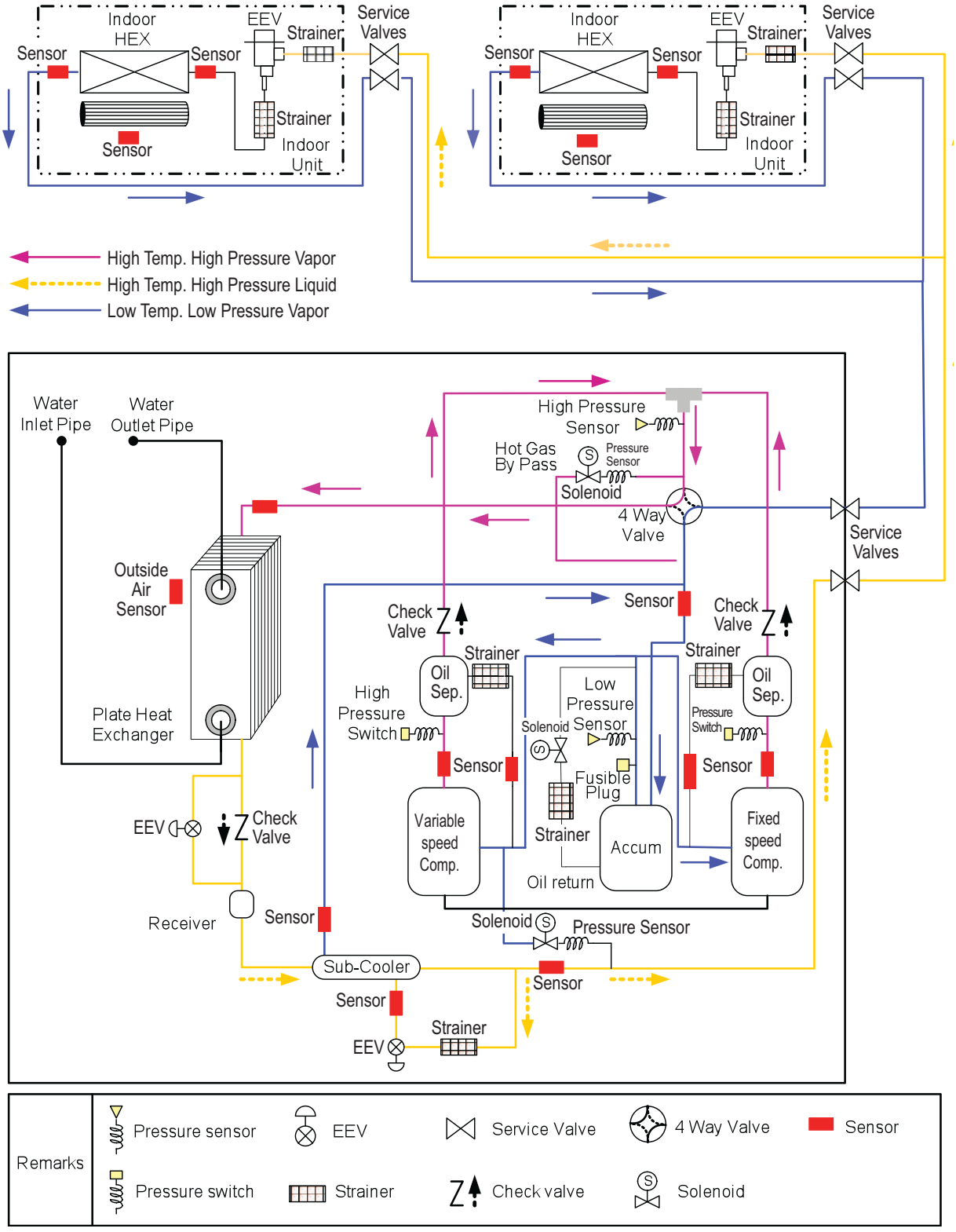

Due to our policy of continuous product innovation, some specifications may change without notification.
©LG Electronics U.S.A., Inc., Englewood Cliffs, NJ. All rights reserved. "LG" is a registered trademark of LG Corp.

REFRIGERANT FLOW DIAGRAMS

ARWN144BA2–ARWN192DA2—Heating Mode

Figure 26: ARWN144BA2–ARWN192DA2—Heating Mode

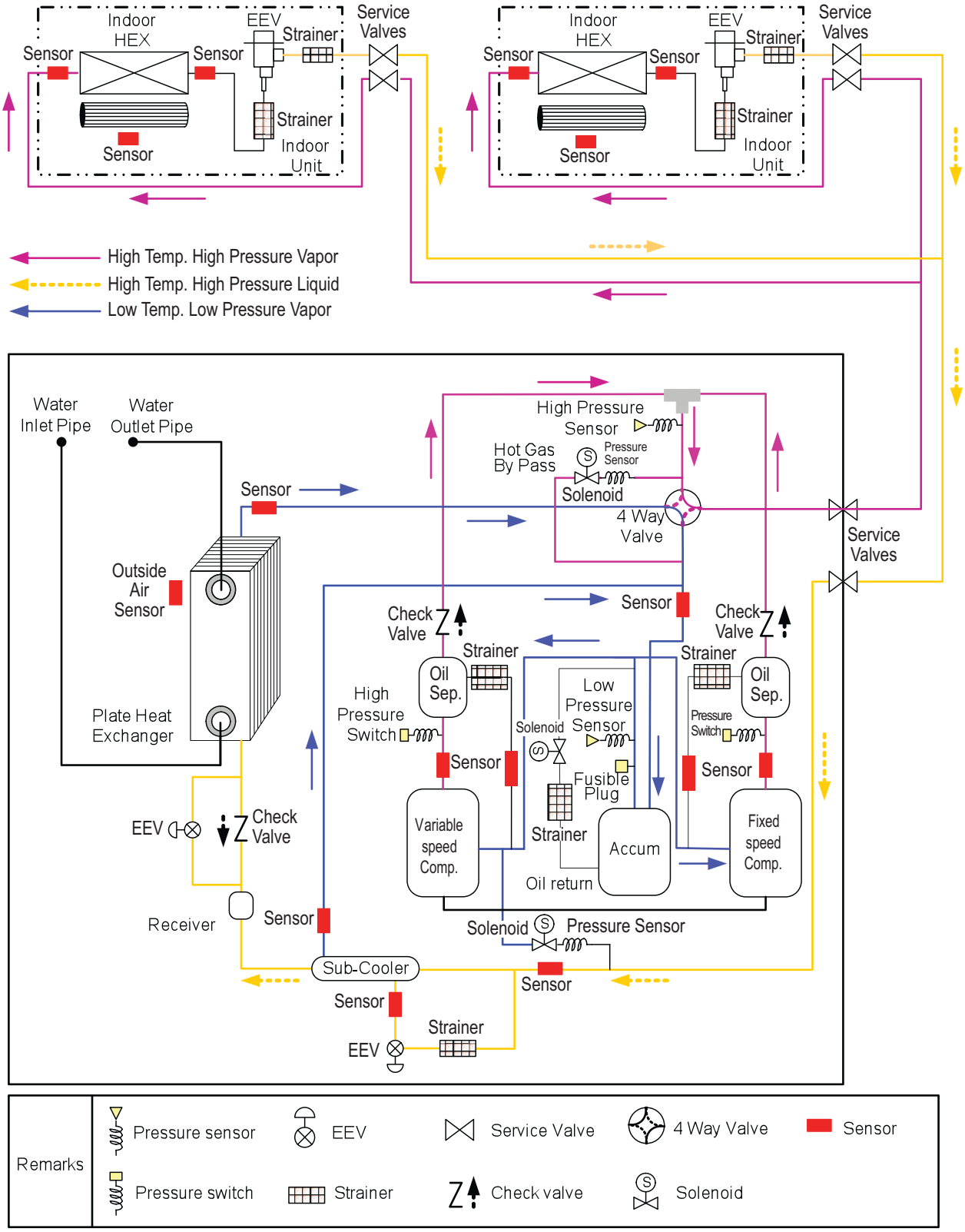

Due to our policy of continuous product innovation, some specifications may change without notification.
©LG Electronics U.S.A., Inc., Englewood Cliffs, NJ. All rights reserved. "LG" is a registered trademark of LG Corp.

REFRIGERANT FLOW DIAGRAMS

ARWN144BA2–ARWN192DA2—Oil Return Operation

Figure 27: ARWN144BA2–ARWN192DA2—Oil Return Operation

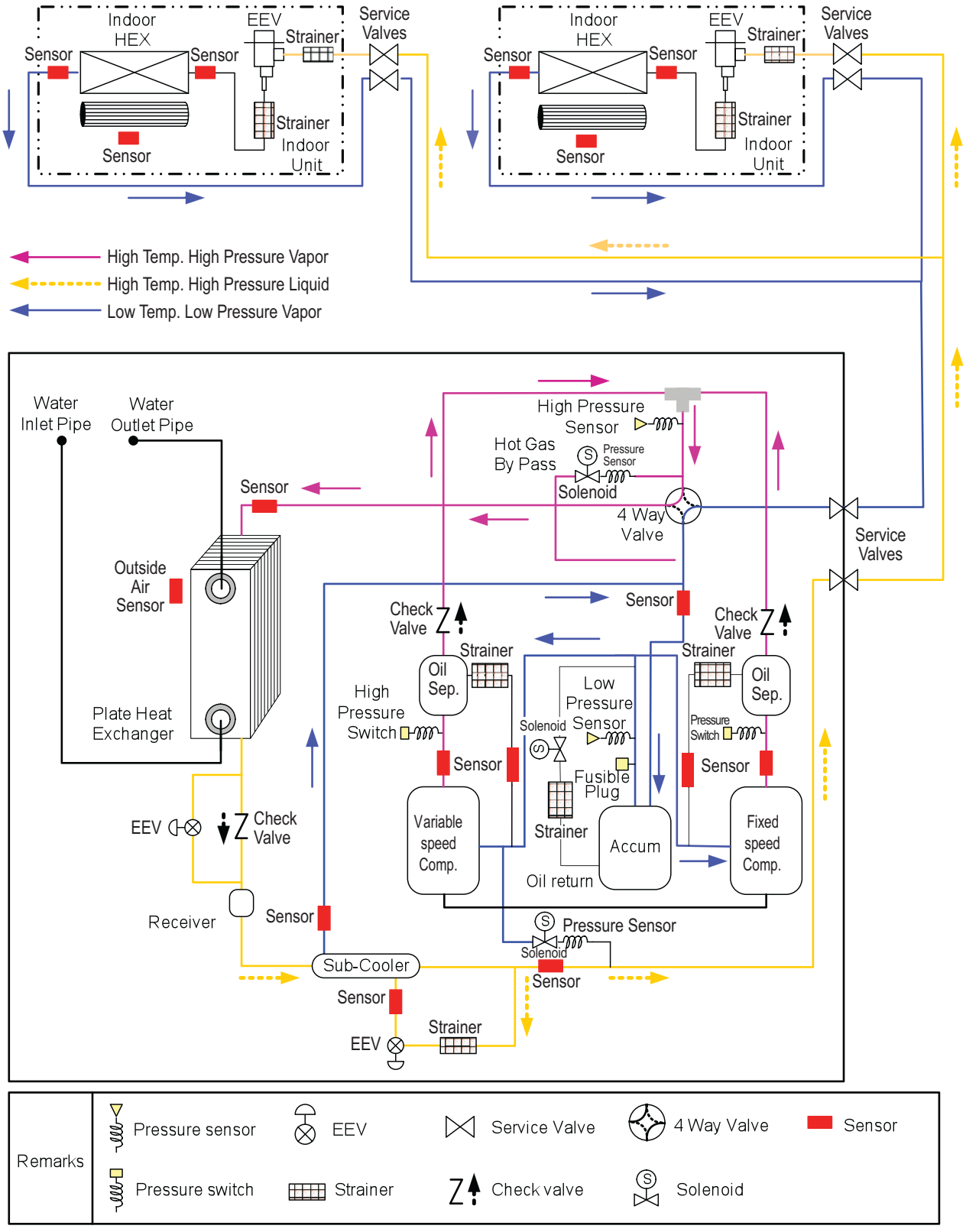

Due to our policy of continuous product innovation, some specifications may change without notification.
©LG Electronics U.S.A., Inc., Englewood Cliffs, NJ. All rights reserved. "LG" is a registered trademark of LG Corp.

Figure 28: ARWB072BA2—Outdoor Wiring Diagram

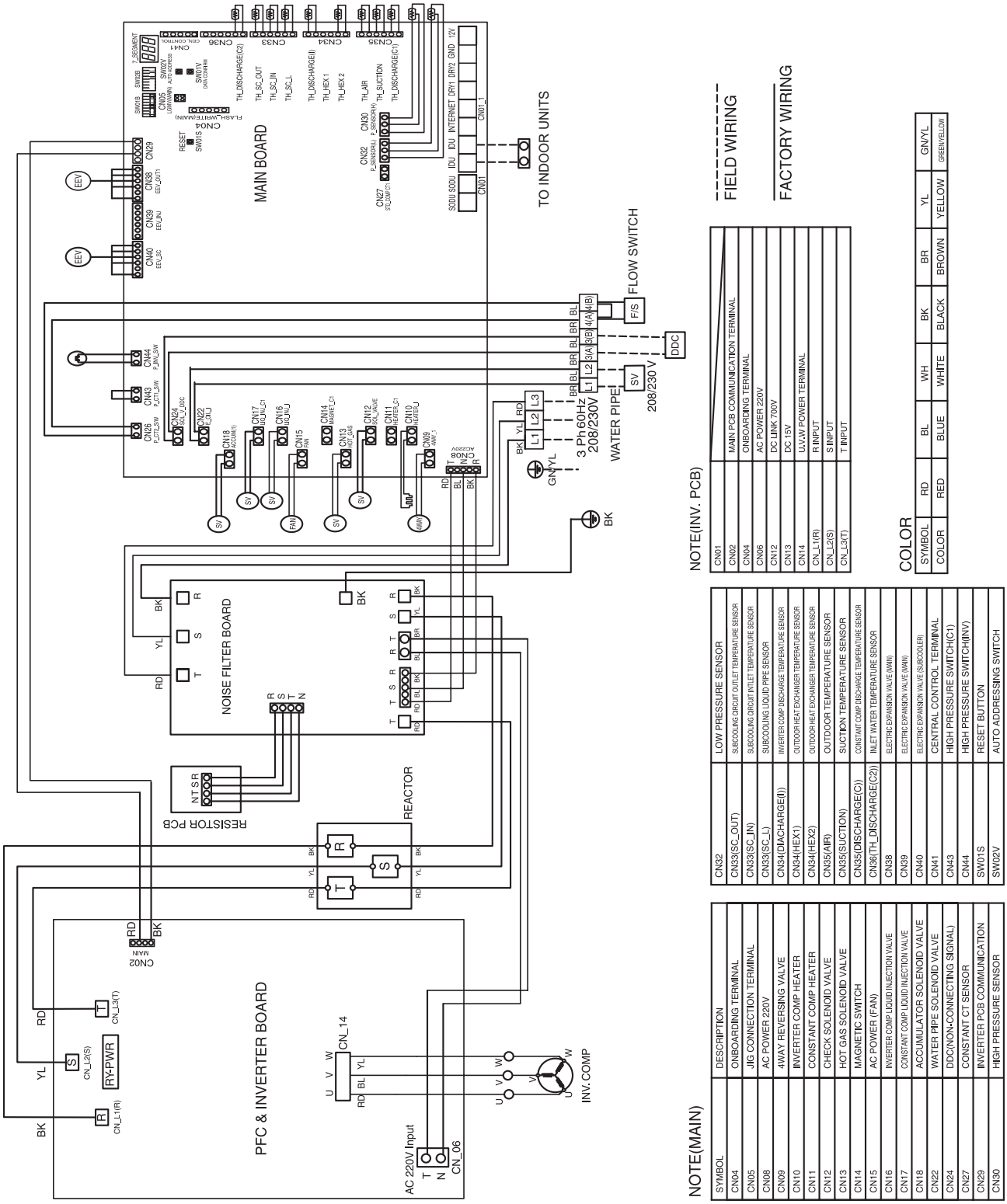

CN01	MAIN PCB COMMUNICATION TERMINAL
CN02	ONBOARDING TERMINAL
CN04	AC POWER 220V
CN06	DC LINK 700V
CN12	DC 15V
CN13	U,V,W POWER TERMINAL
CN14	R INPUT
CN_L1(R)	S INPUT
CN_L2(S)	T INPUT
CN_L3(T)	

SYMBOL	RD	BL	WH	BK	BR	YL	GN/YL
COLOR	RED	BLUE	WHITE	BLACK	BROWN	YELLOW	GREEN/YELLOW

CN32	LOW PRESSURE SENSOR
CN33(SC_OUT)	SUBCOOLING CIRCUIT OUTLET TEMPERATURE SENSOR
CN33(SC_IN)	SUBCOOLING CIRCUIT INLET TEMPERATURE SENSOR
CN33(SC_L)	SUBCOOLING LIQUID PIPE SENSOR
CN34(DISCHARGE(I))	INVERTER COMP DISCHARGE TEMPERATURE SENSOR
CN34(HEX1)	OUTDOOR HEAT EXCHANGER TEMPERATURE SENSOR
CN34(HEX2)	OUTDOOR HEAT EXCHANGER TEMPERATURE SENSOR
CN35(AIR)	OUTDOOR TEMPERATURE SENSOR
CN35(SUCTION)	SUCTION TEMPERATURE SENSOR
CN35(DISCHARGE(C))	CONSTANT COMP DISCHARGE TEMPERATURE SENSOR
CN36(TH_DISCHARGE(C2))	INLET WATER TEMPERATURE SENSOR
CN38	ELECTRIC EXPANSION VALVE (MAIN)
CN39	ELECTRIC EXPANSION VALVE (MAIN)
CN40	ELECTRIC EXPANSION VALVE (SUBCOOLER)
CN41	CENTRAL CONTROL TERMINAL
CN43	HIGH PRESSURE SWITCH(IC1)
CN44	HIGH PRESSURE SWITCH(INV)
SW01S	RESET BUTTON
SW02V	AUTO ADDRESSING SWITCH

SYMBOL	DESCRIPTION
CN04	ONBOARDING TERMINAL
CN05	JIG CONNECTION TERMINAL
CN08	AC POWER 220V
CN09	4WAY REVERSING VALVE
CN10	INVERTER COMP HEATER
CN11	CONSTANT COMP HEATER
CN12	CHECK SOLENOID VALVE
CN13	HOT GAS SOLENOID VALVE
CN14	MAGNETIC SWITCH
CN15	AC POWER (FAN)
CN16	INVERTER COMP LIQUID INJECTION VALVE
CN17	CONSTANT COMP LIQUID INJECTION VALVE
CN18	ACCUMULATOR SOLENOID VALVE
CN22	WATER PIPE SOLENOID VALVE
CN24	DDC(NON-CONNECTING SIGNAL)
CN27	CONSTANT CT SENSOR
CN29	INVERTER PCB COMMUNICATION
CN30	HIGH PRESSURE SENSOR

Due to our policy of continuous product innovation, some specifications may change without notification.
©LG Electronics U.S.A., Inc., Englewood Cliffs, NJ. All rights reserved. "LG" is a registered trademark of LG Corp.

WIRING DIAGRAMS

ARWB096DA2—Outdoor Wiring Diagram

Figure 29: ARWB096DA2—Outdoor Wiring Diagram

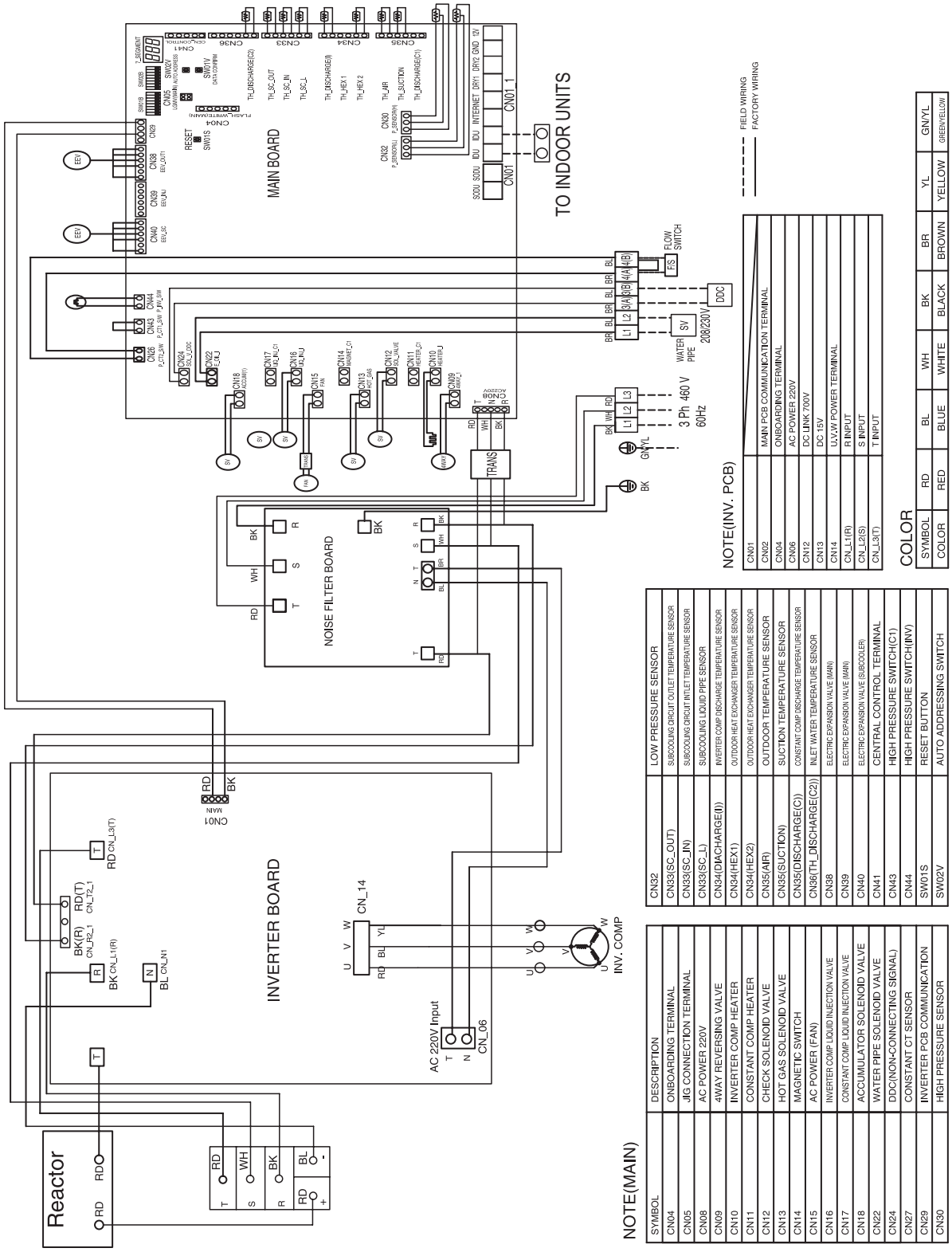

NOTE(INV. PCB)

CN01	MAIN PCB COMMUNICATION TERMINAL
CN02	ONBOARDING TERMINAL
CN04	AC POWER 220V
CN06	DC LINK 700V
CN12	DC 15V
CN13	U,V,W POWER TERMINAL
CN14	R INPUT
CN_L1(R)	S INPUT
CN_L2(S)	T INPUT
CN_L3(T)	

COLOR

SYMBOL	RD	BL	WH	BK	BR	YL	GN/YL
COLOR	RED	BLUE	WHITE	BLACK	BROWN	YELLOW	GREEN/YELLOW

NOTE(MAIN)

SYMBOL	DESCRIPTION
CN04	ONBOARDING TERMINAL
CN05	JIG CONNECTION TERMINAL
CN08	AC POWER 220V
CN09	4WAY REVERSING VALVE
CN10	INVERTER COMP HEATER
CN11	CONSTANT COMP HEATER
CN12	CHECK SOLENOID VALVE
CN13	HOT GAS SOLENOID VALVE
CN14	MAGNETIC SWITCH
CN15	AC POWER (FAN)
CN16	INVERTER COMP LIQUID INJECTION VALVE
CN17	CONSTANT COMP LIQUID INJECTION VALVE
CN18	ACCUMULATOR SOLENOID VALVE
CN22	WATER PIPE SOLENOID VALVE
CN24	DDC(NON-CONNECTING SIGNAL)
CN27	CONSTANT CT SENSOR
CN29	INVERTER PCB COMMUNICATION
CN30	HIGH PRESSURE SENSOR
CN32	LOW PRESSURE SENSOR
CN33(SC_OUT)	SUBCOOLING CIRCUIT OUTLET TEMPERATURE SENSOR
CN33(SC_IN)	SUBCOOLING CIRCUIT INTLET TEMPERATURE SENSOR
CN33(SC_L)	SUBCOOLING LIQUID PIPE SENSOR
CN34(DIACHARGE(II))	INVERTER COMP DISCHARGE TEMPERATURE SENSOR
CN34(HEX1)	OUTDOOR HEAT EXCHANGER TEMPERATURE SENSOR
CN34(HEX2)	OUTDOOR HEAT EXCHANGER TEMPERATURE SENSOR
CN35(AIR)	OUTDOOR TEMPERATURE SENSOR
CN35(SUCTION)	SUCTION TEMPERATURE SIENSOR
CN35(DISCHARGE(C1))	CONSTANT COMP DISCHARGE TEMPERATURE SENSOR
CN36(TH_DISCHARGE(C2))	INLET WATER TEMPERATURE SENSOR
CN38	ELECTRIC EXPANSION VALVE (MAIN)
CN39	ELECTRIC EXPANSION VALVE (MAIN)
CN40	ELECTRIC EXPANSION VALVE (SUBCOOLER)
CN41	CENTRAL CONTROL TERMINAL
CN43	HIGH PRESSURE SWITCH(C1)
CN44	HIGH PRESSURE SWITCH(INV)
SW01S	RESET BUTTON
SW02V	AUTO ADDRESSING SWITCH

Due to our policy of continuous product innovation, some specifications may change without notification.
©LG Electronics U.S.A., Inc., Englewood Cliffs, NJ. All rights reserved. "LG" is a registered trademark of LG Corp.

Figure 30: ARWB144BA2—Outdoor Wiring Diagram

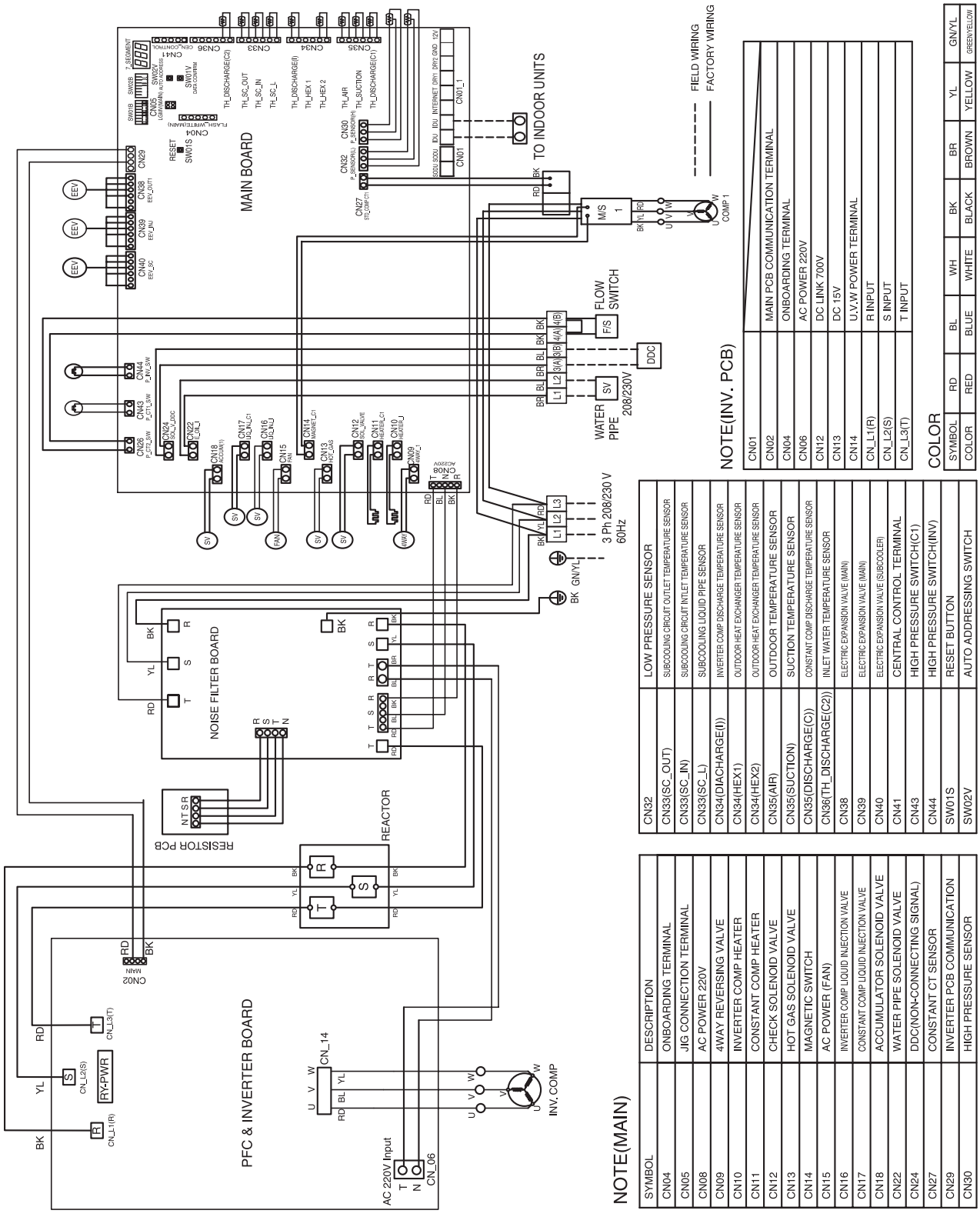

CN01	MAIN PCB COMMUNICATION TERMINAL
CN02	ONBOARDING TERMINAL
CN04	AC POWER 220V
CN06	DC LINK 700V
CN12	DC 15V
CN13	U,V,W POWER TERMINAL
CN14	R INPUT
CN_L1(R)	S INPUT
CN_L2(S)	T INPUT
CN_L3(T)	

SYMBOL	RD	BL	WH	BK	BR	YL	GN/YL
COLOR	RED	BLUE	WHITE	BLACK	BROWN	YELLOW	GREEN/YELLOW

CN32	LOW PRESSURE SENSOR
CN33(SC_OUT)	SUBCOOLING CIRCUIT OUTLET TEMPERATURE SENSOR
CN33(SC_IN)	SUBCOOLING CIRCUIT INTLET TEMPERATURE SENSOR
CN33(SC_L)	SUBCOOLING LIQUID PIPE SENSOR
CN34(DIACHARGE(I))	INVERTER COMP DISCHARGE TEMPERATURE SENSOR
CN34(HEX1)	OUTDOOR HEAT EXCHANGER TEMPERATURE SENSOR
CN34(HEX2)	OUTDOOR HEAT EXCHANGER TEMPERATURE SENSOR
CN35(AIR)	OUTDOOR TEMPERATURE SENSOR
CN35(SUCTION)	SUCTION TEMPERATURE SENSOR
CN35(DISCHARGE(C))	CONSTANT COMP DISCHARGE TEMPERATURE SENSOR
CN36(TH_DISCHARGE(C2))	INLET WATER TEMPERATURE SENSOR
CN38	ELECTRIC EXPANSION VALVE (MAIN)
CN39	ELECTRIC EXPANSION VALVE (MAIN)
CN40	ELECTRIC EXPANSION VALVE (SUBCOOLER)
CN41	CENTRAL CONTROL TERMINAL
CN43	HIGH PRESSURE SWITCH(C1)
CN44	HIGH PRESSURE SWITCH(INV)
SW01S	RESET BUTTON
SW02V	AUTO ADDRESSING SWITCH

SYMBOL	DESCRIPTION
CN04	ONBOARDING TERMINAL
CN05	JIG CONNECTION TERMINAL
CN08	AC POWER 220V
CN09	4WAY REVERSING VALVE
CN10	INVERTER COMP HEATER
CN11	CONSTANT COMP HEATER
CN12	CHECK SOLENOID VALVE
CN13	HOT GAS SOLENOID VALVE
CN14	MAGNETIC SWITCH
CN15	AC POWER (FAN)
CN16	INVERTER COMP LIQUID INJECTION VALVE
CN17	CONSTANT COMP LIQUID INJECTION VALVE
CN18	ACCUMULATOR SOLENOID VALVE
CN22	WATER PIPE SOLENOID VALVE
CN24	DDC(NON-CONNECTING SIGNAL)
CN27	CONSTANT CT SENSOR
CN29	INVERTER PCB COMMUNICATION
CN30	HIGH PRESSURE SENSOR

Due to our policy of continuous product innovation, some specifications may change without notification.
©LG Electronics U.S.A., Inc., Englewood Cliffs, NJ. All rights reserved. "LG" is a registered trademark of LG Corp.

WIRING DIAGRAMS

ARWB192DA2—Outdoor Wiring Diagram

Figure 31: ARWB192DA2—Outdoor Wiring Diagram

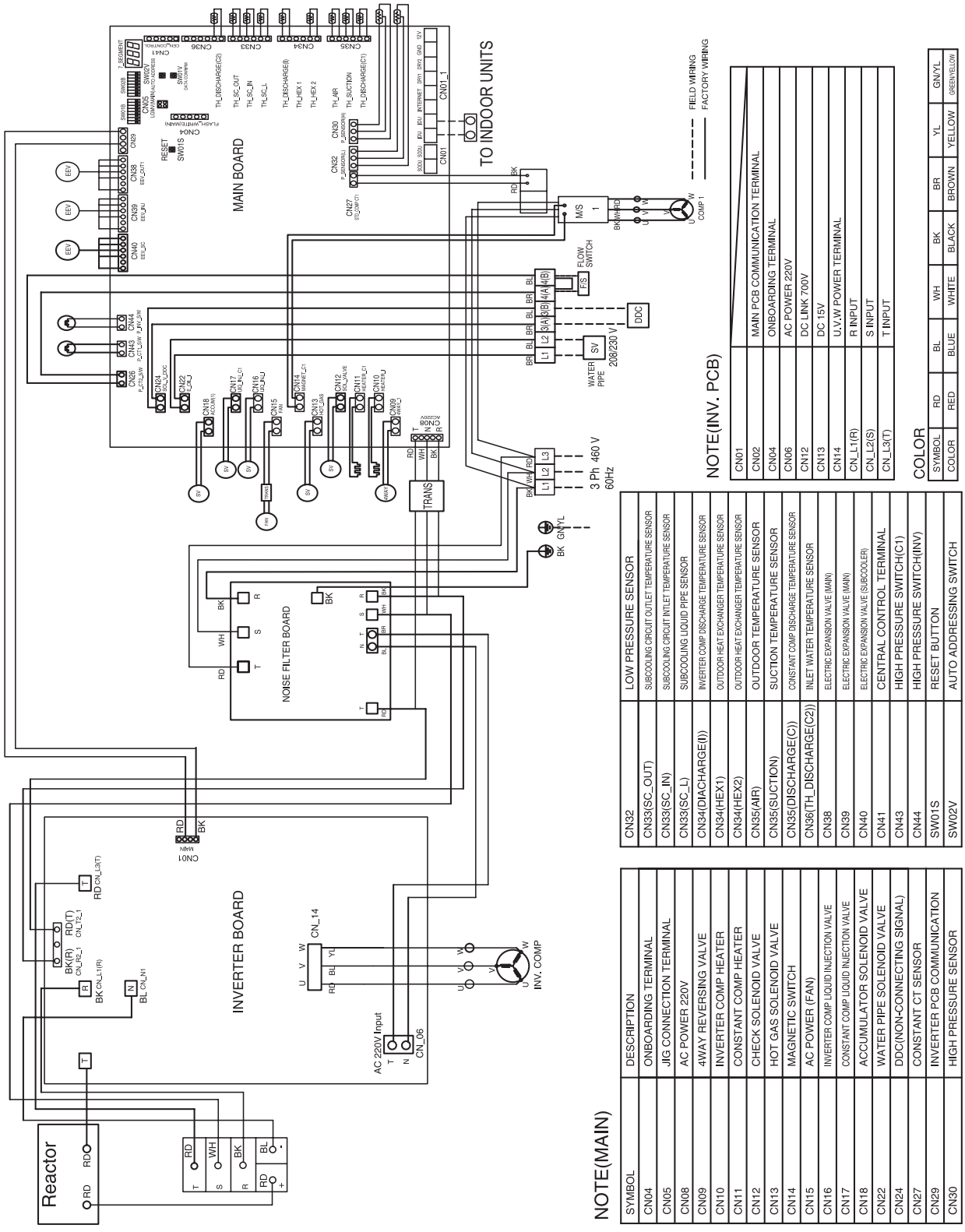

NOTE(INV. PCB)

CN01	MAIN PCB COMMUNICATION TERMINAL
CN02	ONBOARDING TERMINAL
CN04	AC POWER 220V
CN06	DC LINK 700V
CN12	DC 15V
CN13	U.V.W POWER TERMINAL
CN14	R INPUT
CN_L1(R)	S INPUT
CN_L2(S)	T INPUT
CN_L3(T)	

COLOR

SYMBOL	RD	BL	WH	BK	BR	YL	GN/YL
COLOR	RED	BLUE	WHITE	BLACK	BROWN	YELLOW	GREEN/YELLOW

CN32	LOW PRESSURE SENSOR
CN33(SC_OUT)	SUBCOOLING CIRCUIT OUTLET TEMPERATURE SENSOR
CN33(SC_IN)	SUBCOOLING CIRCUIT INTLET TEMPERATURE SENSOR
CN33(SC_L)	SUBCOOLING LIQUID PIPE SENSOR
CN34(DIACHARGE(I))	INVERTER COMP DISCHARGE TEMPERATURE SENSOR
CN34(HEX1)	OUTDOOR HEAT EXCHANGER TEMPERATURE SENSOR
CN34(HEX2)	OUTDOOR HEAT EXCHANGER TEMPERATURE SENSOR
CN35(AIR)	OUTDOOR TEMPERATURE SENSOR
CN35(SUCTION)	SUCTION TEMPERATURE SENSOR
CN35(DISCHARGE(C))	CONSTANT COMP DISCHARGE TEMPERATURE SENSOR
CN36(TH_DISCHARGE(C2))	INLET WATER TEMPERATURE SENSOR
CN38	ELECTRIC EXPANSION VALVE (MAIN)
CN39	ELECTRIC EXPANSION VALVE (MAIN)
CN40	ELECTRIC EXPANSION VALVE (SUBCOOLER)
CN41	CENTRAL CONTROL TERMINAL
CN43	HIGH PRESSURE SWITCH(C1)
CN44	HIGH PRESSURE SWITCH(INV)
SW01S	RESET BUTTON
SW02V	AUTO ADDRESSING SWITCH

NOTE(MAIN)

SYMBOL	DESCRIPTION
CN04	ONBOARDING TERMINAL
CN05	JIG CONNECTION TERMINAL
CN08	AC POWER 220V
CN09	4WAY REVERSING VALVE
CN10	INVERTER COMP HEATER
CN11	CONSTANT COMP HEATER
CN12	CHECK SOLENOID VALVE
CN13	HOT GAS SOLENOID VALVE
CN14	MAGNETIC SWITCH
CN15	AC POWER (FAN)
CN16	INVERTER COMP LIQUID INJECTION VALVE
CN17	CONSTANT COMP LIQUID INJECTION VALVE
CN18	ACCUMULATOR SOLENOID VALVE
CN22	WATER PIPE SOLENOID VALVE
CN24	DDC(NON-CONNECTING SIGNAL)
CN27	CONSTANT CT SENSOR
CN29	INVERTER PCB COMMUNICATION
CN30	HIGH PRESSURE SENSOR

Due to our policy of continuous product innovation, some specifications may change without notification.
©LG Electronics U.S.A., Inc., Englewood Cliffs, NJ. All rights reserved. "LG" is a registered trademark of LG Corp.

Figure 32: ARWN072BA2—Outdoor Wiring Diagram

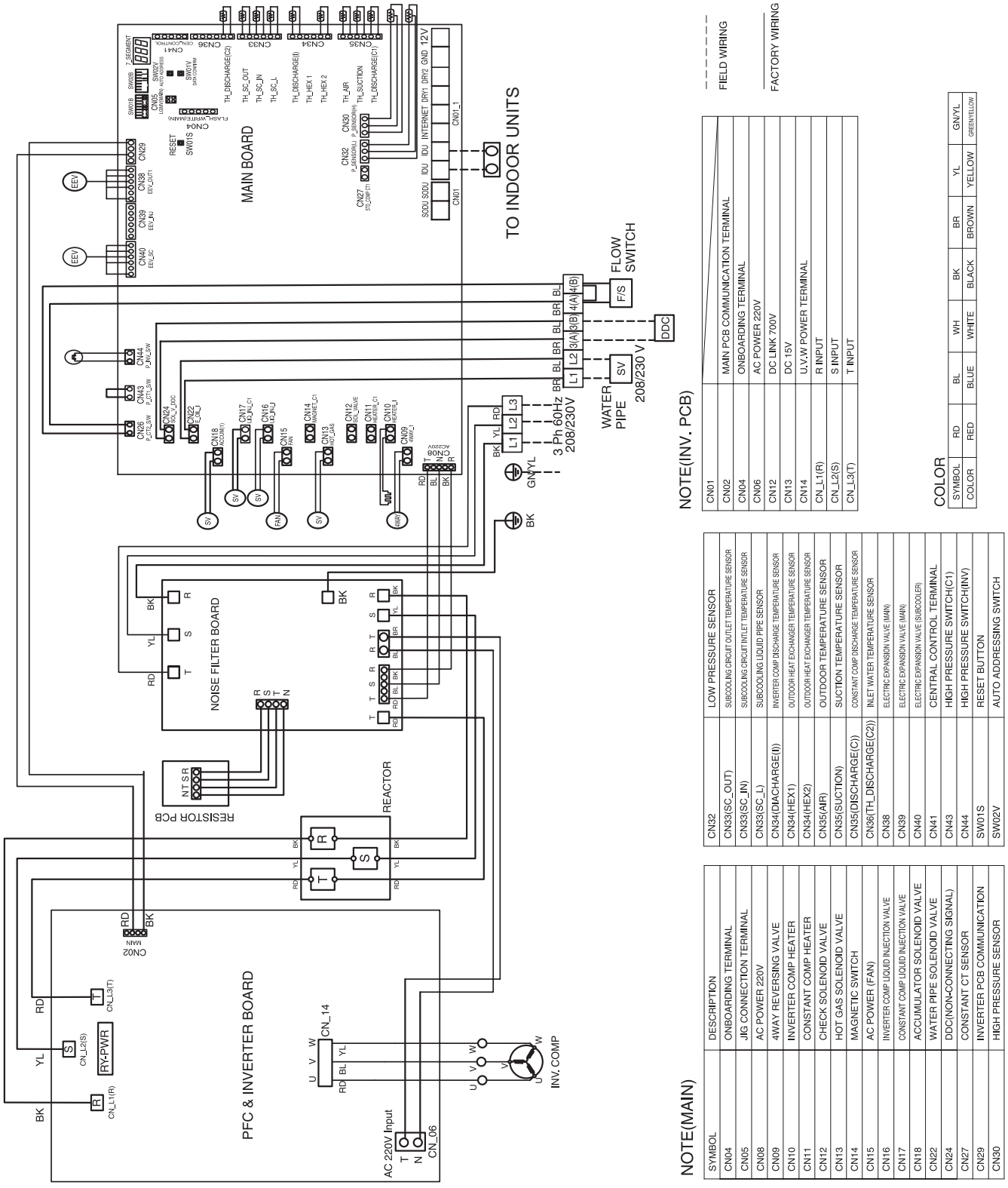

NOTE(INV. PCB)

CN01	
CN02	MAIN PCB COMMUNICATION TERMINAL
CN04	ONBOARDING TERMINAL
CN06	AC POWER 220V
CN12	DC LINK 700V
CN13	DC 15V
CN14	U,V,W POWER TERMINAL
CN_L1(R)	R INPUT
CN_L2(S)	S INPUT
CN_L3(T)	T INPUT

COLOR

SYMBOL	RD	BL	WH	BK	BR	YL	GN/YL
COLOR	RED	BLUE	WHITE	BLACK	BROWN	YELLOW	GREEN/YELLOW

CN32	LOW PRESSURE SENSOR
CN33(SC_OUT)	SUBCOOLING CIRCUIT OUTLET TEMPERATURE SENSOR
CN33(SC_IN)	SUBCOOLING CIRCUIT INTLET TEMPERATURE SENSOR
CN33(SC_L)	SUBCOOLING LIQUID PIPE SENSOR
CN34(DIACHARGE(II))	INVERTER COMP DISCHARGE TEMPERATURE SENSOR
CN34(HEX1)	OUTDOOR HEAT EXCHANGER TEMPERATURE SENSOR
CN34(HEX2)	OUTDOOR HEAT EXCHANGER TEMPERATURE SENSOR
CN35(AIR)	OUTDOOR TEMPERATURE SENSOR
CN35(SUCTION)	SUCTION TEMPERATURE SENSOR
CN35(DISCHARGE(C))	CONSTANT COMP DISCHARGE TEMPERATURE SENSOR
CN36(TH_DISCHARGE(C2))	INLET WATER TEMPERATURE SENSOR
CN38	ELECTRIC EXPANSION VALVE (MAIN)
CN39	ELECTRIC EXPANSION VALVE (MAIN)
CN40	ELECTRIC EXPANSION VALVE (SUBCOOLER)
CN41	CENTRAL CONTROL TERMINAL
CN43	HIGH PRESSURE SWITCH(C1)
CN44	HIGH PRESSURE SWITCH(INV)
SW01S	RESET BUTTON
SW02V	AUTO ADDRESSING SWITCH

NOTE(MAIN)

SYMBOL	DESCRIPTION
CN04	ONBOARDING TERMINAL
CN05	JIG CONNECTION TERMINAL
CN08	AC POWER 220V
CN09	4WAY REVERSING VALVE
CN10	INVERTER COMP HEATER
CN11	CONSTANT COMP HEATER
CN12	CHECK SOLENOID VALVE
CN13	HOT GAS SOLENOID VALVE
CN14	MAGNETIC SWITCH
CN15	AC POWER (FAN)
CN16	INVERTER COMP LIQUID INJECTION VALVE
CN17	CONSTANT COMP LIQUID INJECTION VALVE
CN18	ACCUMULATOR SOLENOID VALVE
CN22	WATER PIPE SOLENOID VALVE
CN24	DDC(NON-CONNECTING SIGNAL)
CN27	CONSTANT CT SENSOR
CN29	INVERTER PCB COMMUNICATION
CN30	HIGH PRESSURE SENSOR

Due to our policy of continuous product innovation, some specifications may change without notification.
©LG Electronics U.S.A., Inc., Englewood Cliffs, NJ. All rights reserved. "LG" is a registered trademark of LG Corp.

WIRING DIAGRAMS

ARWN096DA2—Outdoor Wiring Diagram

Figure 33: ARWN096DA2—Outdoor Wiring Diagram

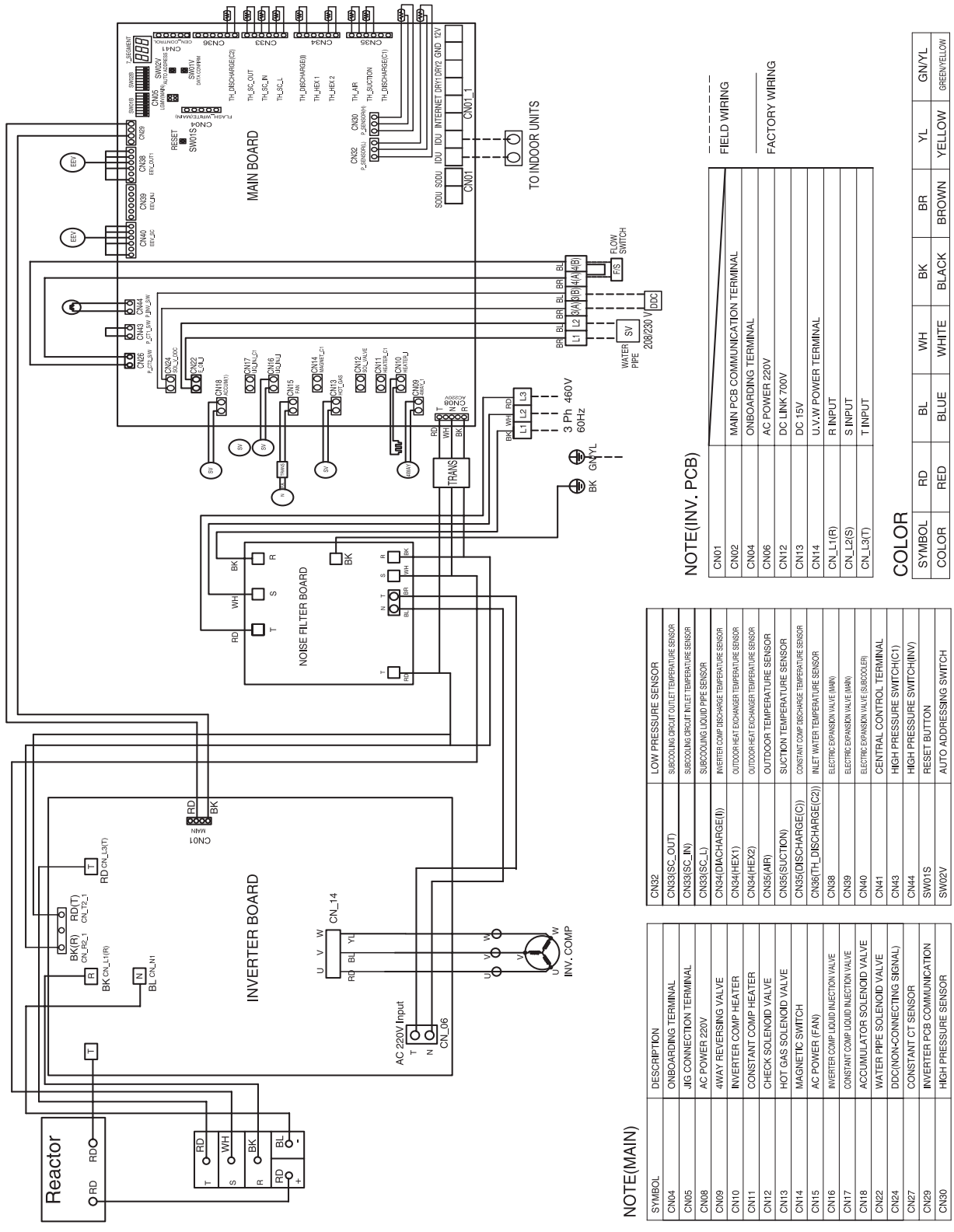

NOTE(INV. PCB)

CN01	MAIN PCB COMMUNICATION TERMINAL
CN02	ONBOARDING TERMINAL
CN04	AC POWER 220V
CN06	DC LINK 700V
CN12	DC 15V
CN13	U.V.W POWER TERMINAL
CN14	R INPUT
CN_L1(R)	S INPUT
CN_L2(S)	T INPUT
CN_L3(T)	

COLOR

SYMBOL	RD	BL	WH	BK	BR	YL	GN/YL
COLOR	RED	BLUE	WHITE	BLACK	BROWN	YELLOW	GREEN/YELLOW

NOTE(MAIN)

SYMBOL	DESCRIPTION
CN04	ONBOARDING TERMINAL
CN05	JIG CONNECTION TERMINAL
CN08	AC POWER 220V
CN09	4WAY REVERSING VALVE
CN10	INVERTER COMP HEATER
CN11	CONSTANT COMP HEATER
CN12	CHECK SOLENOID VALVE
CN13	HOT GAS SOLENOID VALVE
CN14	MAGNETIC SWITCH
CN15	AC POWER (FAN)
CN16	INVERTER COMP LIQUID INJECTION VALVE
CN17	CONSTANT COMP LIQUID INJECTION VALVE
CN18	ACCUMULATOR SOLENOID VALVE
CN22	WATER PIPE SOLENOID VALVE
CN24	DDC(NON-CONNECTING SIGNAL)
CN27	CONSTANT CT SENSOR
CN29	INVERTER PCB COMMUNICATION
CN30	HIGH PRESSURE SENSOR
CN32	LOW PRESSURE SENSOR
CN33(SC_OUT)	SUBCOOLING CIRCUIT OUTLET TEMPERATURE SENSOR
CN33(SC_IN)	SUBCOOLING CIRCUIT INTLET TEMPERATURE SENSOR
CN33(SC_L)	SUBCOOLING LIQUID PIPE SENSOR
CN34(DISCHARGE(I))	INVERTER COMP DISCHARGE TEMPERATURE SENSOR
CN34(HEX1)	OUTDOOR HEAT EXCHANGER TEMPERATURE SENSOR
CN34(HEX2)	OUTDOOR HEAT EXCHANGER TEMPERATURE SENSOR
CN35(AIR)	OUTDOOR TEMPERATURE SENSOR
CN35(SUCTION)	SUCTION TEMPERATURE SENSOR
CN35(DISCHARGE(C))	CONSTANT COMP DISCHARGE TEMPERATURE SENSOR
CN36(TH_DISCHARGE(C2))	INLET WATER TEMPERATURE SENSOR
CN38	ELECTRIC EXPANSION VALVE (MAIN)
CN39	ELECTRIC EXPANSION VALVE (MAIN)
CN40	ELECTRIC EXPANSION VALVE (SUBCOOLER)
CN41	CENTRAL CONTROL TERMINAL
CN43	HIGH PRESSURE SWITCH(C1)
CN44	HIGH PRESSURE SWITCH(INV)
SW01S	RESET BUTTON
SW02V	AUTO ADDRESSING SWITCH

Due to our policy of continuous product innovation, some specifications may change without notification.
©LG Electronics U.S.A., Inc., Englewood Cliffs, NJ. All rights reserved. "LG" is a registered trademark of LG Corp.

Figure 34: ARWN144BA2—Outdoor Wiring Diagram

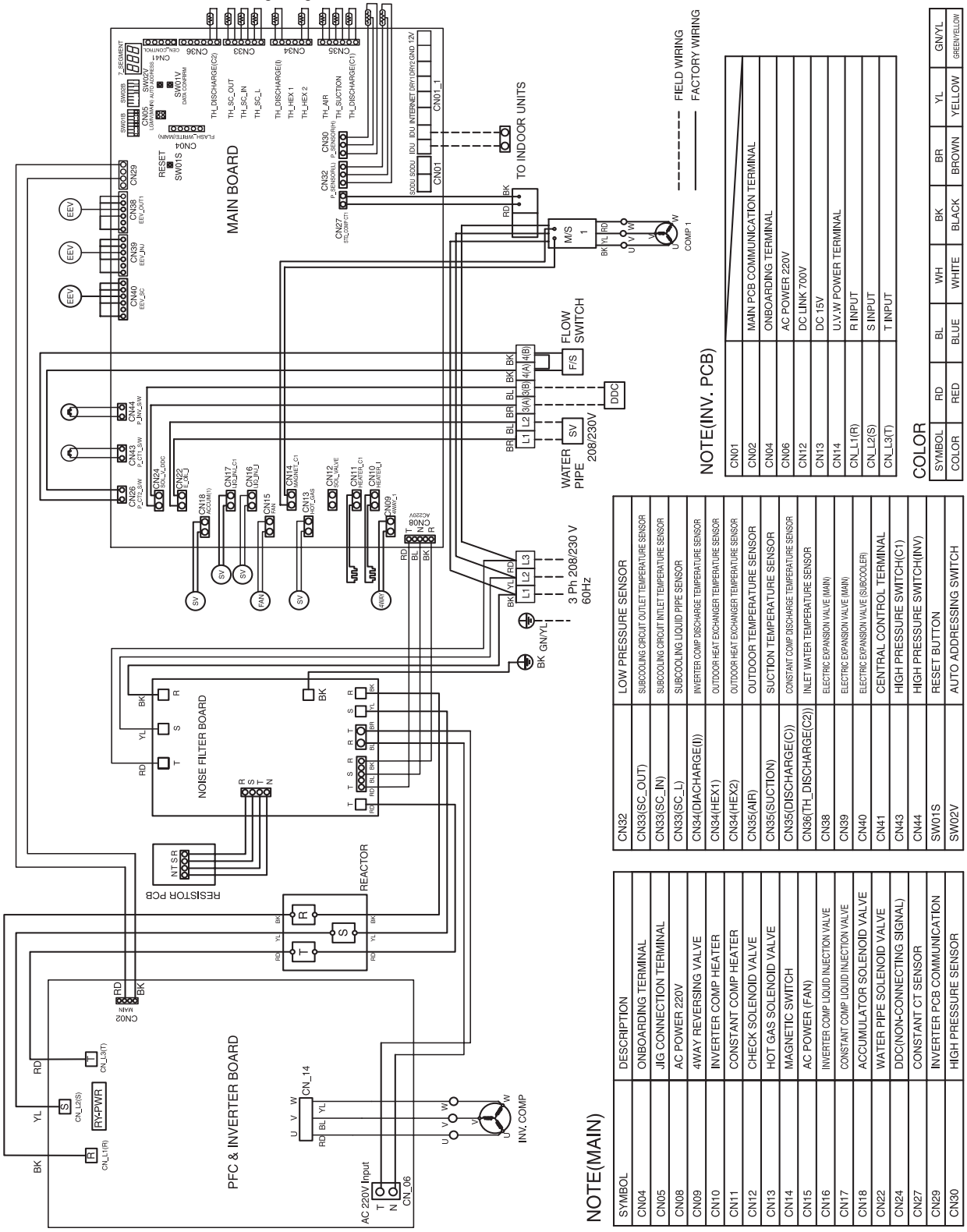

NOTE(MAIN)

SYMBOL	DESCRIPTION
CN04	ONBOARDING TERMINAL
CN05	JIG CONNECTION TERMINAL
CN08	AC POWER 220V
CN09	4WAY REVERSING VALVE
CN10	INVERTER COMP HEATER
CN11	CONSTANT COMP HEATER
CN12	CHECK SOLENOID VALVE
CN13	HOT GAS SOLENOID VALVE
CN14	MAGNETIC SWITCH
CN15	AC POWER (FAN)
CN16	INVERTER COMP LIQUID INJECTION VALVE
CN17	CONSTANT COMP LIQUID INJECTION VALVE
CN18	ACCUMULATOR SOLENOID VALVE
CN22	WATER PIPE SOLENOID VALVE
CN24	DDC(NON-CONNECTING SIGNAL)
CN27	CONSTANT CT SENSOR
CN29	INVERTER PCB COMMUNICATION
CN30	HIGH PRESSURE SENSOR

CN32	LOW PRESSURE SENSOR
CN33(SC_OUT)	SUBCOOLING CIRCUIT OUTLET TEMPERATURE SENSOR
CN33(SC_IN)	SUBCOOLING CIRCUIT INTLET TEMPERATURE SENSOR
CN33(SC_L)	SUBCOOLING LIQUID PIPE SENSOR
CN34(DIACHARGE(I))	INVERTER COMP DISCHARGE TEMPERATURE SENSOR
CN34(HEX1)	OUTDOOR HEAT EXCHANGER TEMPERATURE SENSOR
CN34(HEX2)	OUTDOOR HEAT EXCHANGER TEMPERATURE SENSOR
CN35(AIR)	OUTDOOR TEMPERATURE SENSOR
CN35(SUCTION)	SUCTION TEMPERATURE SENSOR
CN35(DISCHARGE(C))	CONSTANT COMP DISCHARGE TEMPERATURE SENSOR
CN36(TH_DISCHARGE(C2))	INLET WATER TEMPERATURE SENSOR
CN38	ELECTRIC EXPANSION VALVE (MAIN)
CN39	ELECTRIC EXPANSION VALVE (MAIN)
CN40	ELECTRIC EXPANSION VALVE (SUBCOOLER)
CN41	CENTRAL CONTROL TERMINAL
CN43	HIGH PRESSURE SWITCH(C1)
CN44	HIGH PRESSURE SWITCH(INV)
SW01S	RESET BUTTON
SW02V	AUTO ADDRESSING SWITCH

NOTE(INV. PCB)

CN01	MAIN PCB COMMUNICATION TERMINAL
CN02	ONBOARDING TERMINAL
CN04	AC POWER 220V
CN06	DC LINK 700V
CN12	DC 15V
CN13	U.V.W POWER TERMINAL
CN14	R INPUT
CN_L1(R)	S INPUT
CN_L2(S)	T INPUT
CN_L3(T)	

COLOR

SYMBOL	RD	BL	WH	BK	BR	YL	GN/YL
COLOR	RED	BLUE	WHITE	BLACK	BROWN	YELLOW	GREEN/YELLOW

Due to our policy of continuous product innovation, some specifications may change without notification.
©LG Electronics U.S.A., Inc., Englewood Cliffs, NJ. All rights reserved. "LG" is a registered trademark of LG Corp.

WIRING DIAGRAMS

ARWN192DA2—Outdoor Wiring Diagram

Figure 35: ARWN192DA2—Outdoor Wiring Diagram

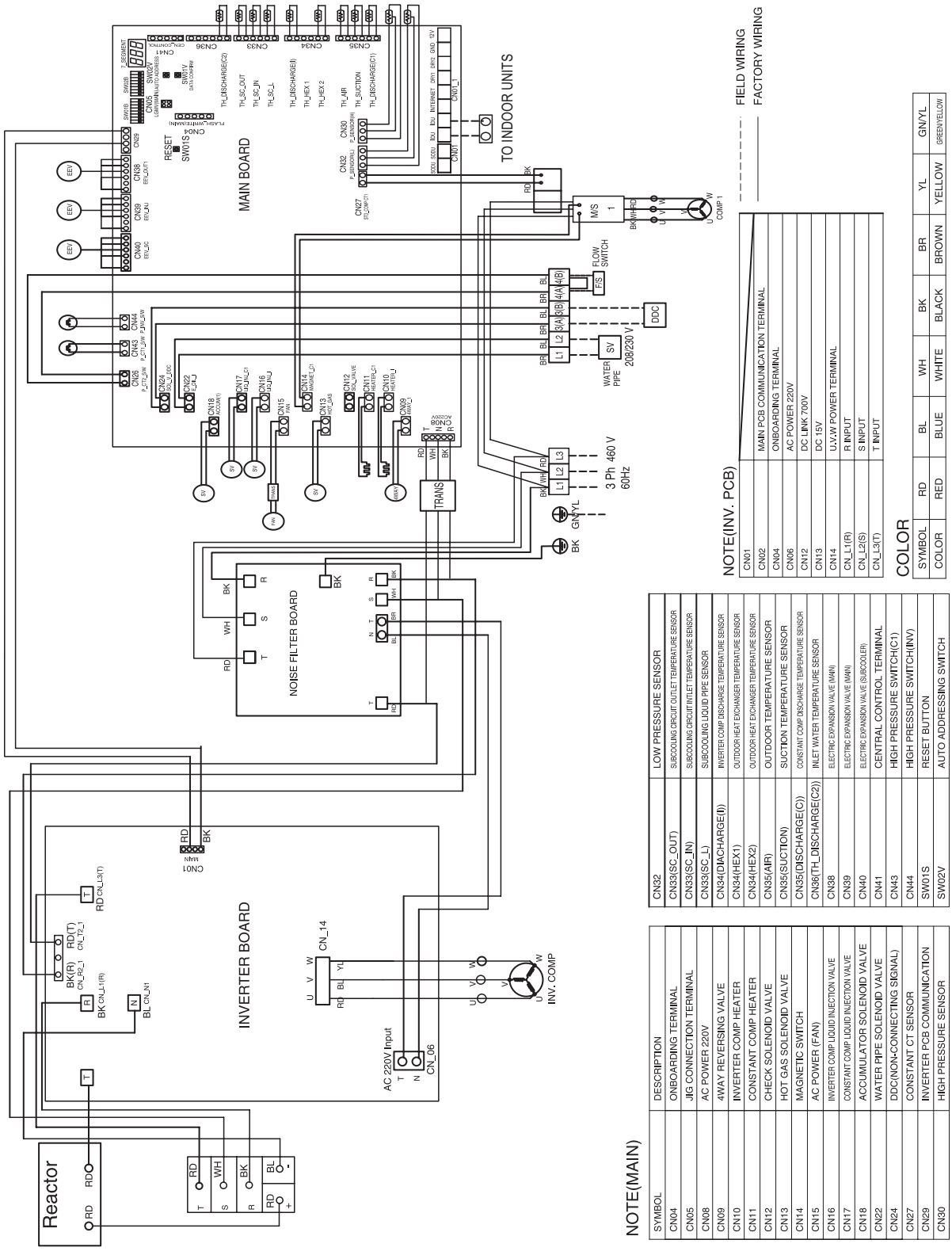

NOTE(MAIN)

SYMBOL	DESCRIPTION
CN04	ONBOARDING TERMINAL
CN05	JIG CONNECTION TERMINAL
CN08	AC POWER 220V
CN09	4WAY REVERSING VALVE
CN10	INVERTER COMP HEATER
CN11	CONSTANT COMP HEATER
CN12	CHECK SOLENOID VALVE
CN13	HOT GAS SOLENOID VALVE
CN14	MAGNETIC SWITCH
CN15	AC POWER (FAN)
CN16	INVERTER COMP LIQUID INJECTION VALVE
CN17	CONSTANT COMP LIQUID INJECTION VALVE
CN18	ACCUMULATOR SOLENOID VALVE
CN22	WATER PIPE SOLENOID VALVE
CN24	DDC(NON-CONNECTING SIGNAL)
CN27	CONSTANT CT SENSOR
CN29	INVERTER PCB COMMUNICATION
CN30	HIGH PRESSURE SENSOR

CN32	LOW PRESSURE SENSOR
CN33(SC_OUT)	SUBCOOLING CIRCUIT OUTLET TEMPERATURE SENSOR
CN33(SC_IN)	SUBCOOLING CIRCUIT INTLET TEMPERATURE SENSOR
CN33(SC_L)	SUBCOOLING LIQUID PIPE SENSOR
CN34(DMCHARGE(fi))	INVERTER COMP DISCHARGE TEMPERATURE SENSOR
CN34(HEX1)	OUTDOOR HEAT EXCHANGER TEMPERATURE SENSOR
CN34(HEX2)	OUTDOOR HEAT EXCHANGER TEMPERATURE SENSOR
CN35(AIR)	OUTDOOR TEMPERATURE SENSOR
CN35(SUCTION)	SUCTION TEMPERATURE SENSOR
CN35(DISCHARGE(C))	CONSTANT COMP DISCHARGE TEMPERATURE SENSOR
CN36(TH_DISCHARGE(C2))	INLET WATER TEMPERATURE SENSOR
CN38	ELECTRIC EXPANSION VALVE (MAIN)
CN39	ELECTRIC EXPANSION VALVE (MAIN)
CN40	ELECTRIC EXPANSION VALVE (SUBCOOLER)
CN41	CENTRAL CONTROL TERMINAL
CN43	HIGH PRESSURE SWITCH(C1)
CN44	HIGH PRESSURE SWITCH(INV)
SW01S	RESET BUTTON
SW02V	AUTO ADDRESSING SWITCH

NOTE(INV. PCB)

CN01	MAIN PCB COMMUNICATION TERMINAL
CN02	ONBOARDING TERMINAL
CN04	AC POWER 220V
CN06	DC LINK 700V
CN12	DC 15V
CN13	U,V,W POWER TERMINAL
CN14	R INPUT
CN_L1(R)	S INPUT
CN_L2(S)	T INPUT
CN_L3(T)	

COLOR

SYMBOL	RD	BL	WH	BK	BR	YL	GN/YL
COLOR	RED	BLUE	WHITE	BLACK	BROWN	YELLOW	GREEN/YELLOW

Due to our policy of continuous product innovation, some specifications may change without notification.
©LG Electronics U.S.A., Inc., Englewood Cliffs, NJ. All rights reserved. "LG" is a registered trademark of LG Corp.

SYSTEM ENGINEERING

“Building Ventilation” on page 189
“Equipment Selection Procedure” on page 192
“Placement Considerations” on page 201
“Refrigerant Pipe Design” on page 204
“Refrigerant Piping Installation” on page 211
“System Refrigerant Charge” on page 218
“Field Installation” on page 220
“Jobsite Connections” on page 225

BUILDING VENTILATION

ASHRAE 62.1-2010 and local codes specify the minimum volume of outdoor air that must be provided to an occupied space. Outdoor air is required to minimize adverse health effects, and it provides acceptable indoor air quality for human occupants. The five methods that can be used with Multi V systems to meet the requirements are summarized here.

⚠ ***Note:*** Although we believe that building these ventilation methods have been portrayed accurately, none of the methods have been tested, verified, or evaluated by LG Electronics, USA, Inc. In all cases, the designer, installer, and contractor should understand if the suggested method is used, it is used at their own risk. LG Electronics USA, Inc. takes no responsibility and offers no warranty, expressed or implied, of merchantability or fitness of purpose if this method fails to perform as stated or intended.

For a complete copy of Standard 62.1-2010, refer to the American Standard of Heating and Air Conditioning Engineers (ASHRAE) website at www.ashrae.org.

Method 1: Unconditioned Outdoor Air (Non-Ducted, Natural Ventilation):

The use of natural ventilation systems may be used when approved by local codes. Natural ventilation systems may be designed using operable windows or louvers. The open area of a window or the free area of a louver must meet the minimum percentage of the net occupied floor area as prescribed by the local code.

Advantages:

Occupants can manually control the amount of outdoor air.

Useful for historic buildings that have no ceiling space for outdoor air ductwork.

May not adversely affect indoor unit operation.

May be used with a full lineup of Multi V indoor units.

Disadvantages:

It may be difficult to control humidity levels from outdoor air when windows are open.

Thermal comfort levels from outdoor air may be substandard when windows are open.

Indoor units may have to be oversized to account for the added heating/cooling loads when windows are open.

Outdoor air loads may be difficult to calculate since the quantity of outdoor air is not regulated.

Method 2: Unconditioned Outdoor Air (Non-Ducted, Fan Assisted Ventilation):

When approved by local codes, the fan assisted ventilation method uses exhaust fans to draw outdoor air into occupied spaces through a wall louver or gravity roof intake hood. Fans can also be used to push the outdoor air into the space and vent the air through louvers or gravity roof exhaust hoods.

Advantages:

Outdoor air may be manually controlled by the occupant, or automatic controls may be installed to open/close outdoor air dampers or to turn on/off ventilation fans.

Useful for large open spaces like warehouses, garages, and workshops.

Outdoor air loads may be easier to calculate since fans will regulate the amount of outdoor air.

May be used with a full lineup of Multi V indoor units.

Disadvantages:

It may be difficult to control humidity levels from outdoor air when louvers/hoods are opened.

Thermal comfort levels from outdoor air may be substandard when louvers/hoods are opened.

Outdoor air loads may be easier to calculate since fans will regulate the amount of outdoor air.

Indoor units may have to be oversized to account for the added heating/cooling loads when louvers/hoods are open.

Hot, cold, and humid spots may occur because the outdoor air may not be evenly distributed to the space in conjunction with the indoor unit.

Due to our policy of continuous product innovation, some specifications may change without notification.
©LG Electronics U.S.A., Inc., Englewood Cliffs, NJ. All rights reserved. "LG" is a registered trademark of LG Corp.

Method 3: Unconditioned Outdoor Air Ducted to Indoor Units:

Outdoor air may be ducted directly into a Multi V indoor unit from a wall cap, louver, or roof hood.

Advantages:

May require less ductwork if indoor units are placed near outdoor walls or a roof deck.

Controls may be added to shut off outdoor air when the space is unoccupied.

Third-party demand control ventilation controls may be installed in order to regulate outdoor intake based on the CO_2 levels of the occupied space.

Disadvantages:

Fan(s) will be required to push outdoor air to the indoor unit because the indoor units are engineered for low sound levels and are not designed for the added static pressure from the outdoor air ductwork.

A filter system will be required because the outdoor air may bypass the main indoor unit filter.

Ducted, 1-way, and 4-way cassette indoor units are the only indoor units that can have ducted outdoor air.

Mixed air cannot exceed indoor unit limits of 59°F DB for heating and 76°F WB for cooling, which affects the operation and performance of indoor units.

Indoor unit capacity needs to be increased to account for added outdoor air heat/cool loads.

Motorized dampers may be required to prevent outdoor air from blowing into the indoor unit when indoor unit shuts off.

Cool outdoor air may prevent a hot start of the indoor unit.

An LG Dry Contact adapter must be added to each indoor unit for signaling to the motorized damper.

Additional low voltage wiring and an isolation relay may be required.

In lieu of using the factory-mounted return air thermistor on indoor units, a remote wall temperature sensor or zone controller must be added and wired for each indoor unit.

Method 4: Coupled Dedicated Outdoor Air (CDOA):

A separate dedicated outdoor air unit coupled to the Multi V system is designed to filter, condition, and dehumidify the outdoor air to near neutral conditions. The outdoor air is routed to the indoor unit(s) using common ductwork, or in some cases, high velocity air ducts.

Advantages:

The indoor unit capacity may not be increased by outdoor air.

Rather than separate fans and filters for each indoor unit, the fan and filter system is centralized to the main outdoor air unit making service easier.

Disadvantages:

Ducted, 1-way, and 4-way cassette indoor units are the only indoor units that can have ducted outdoor air.

Ceiling space may be required for ductwork to be routed from the outdoor air unit to the indoor units.

Fire dampers may be required where outdoor air ductwork penetrates fire-rated walls.

If the outdoor air unit fails, the failure may be masked by the indoor unit changing its operating parameters to compensate for the failure.

- The building occupant may not notice that the outdoor air unit is not working until the unconditioned outdoor air exceeds the indoor unit mixed air limits of 59°F DB for heating and 76°F for cooling.
- Once these limits are exceeded, the indoor unit microprocessor controls may prevent the indoor unit from operating.

Motorized dampers may be required to prevent outdoor air from blowing into the indoor unit when the indoor unit shuts off.

- Cool outdoor air may prevent a hot start of the indoor unit.
- An LG Dry Contact adapter must be added to each indoor unit for signaling to the motorized damper.

Due to potentially extreme temperatures and humidity levels of outdoor air, it is important to select equipment that is specifically designed to condition and dehumidify 100% of the outdoor air. Possible manufacturers of outdoor air units required for Methods #4 (CDOA) and #5 (DDOA) include, but are not limited to, AAON, Greenheck, Renewaire, and Desert Aire.

Due to our policy of continuous product innovation, some specifications may change without notification.
©LG Electronics U.S.A., Inc., Englewood Cliffs, NJ. All rights reserved. "LG" is a registered trademark of LG Corp.

Method 5: Decoupled Dedicated Outdoor Air (DDOA):

A separate dedicated outdoor air unit decoupled from the Multi V system is designed to filter, condition, and dehumidify the outdoor air being introduced into the space. This system is ducted independently from the Multi V system and introduces “neutral” air into each occupied space using ceiling or wall registers.

Advantages:

Does not add heat/cool loads to indoor units.

May be used with a full lineup of the indoor units.

If the outdoor air unit fails, the resulting untreated air will be readily noticed by the occupants who can notify the building engineer.

The outdoor air unit may supply “neutral” air to the occupant space even when the indoor unit shuts off. Interlock controls may not be required.

Rather than separate fans and filters for each indoor unit, the fan and filter system is centralized to the main outdoor air unit making service easier.

Indoor unit operation and performance may not be affected by outdoor air.

Flexibility in many different types of building installations.

Third-party demand control ventilation controls may be more readily accommodated.

Disadvantages:

Ceiling space is required for ductwork from the outdoor air unit to ceiling diffusers.

Fire dampers may be required where ductwork penetrates fire-rated walls.

Due to potentially extreme temperatures and humidity levels of outdoor air, it is important to select equipment that is specifically designed to condition and dehumidify 100% of the outdoor air. Possible manufacturers of outdoor air units required for Methods #4 (CDOA) and #5 (DDOA) include, but are not limited to, AAON, Greenheck, Renewaire, and Desert Aire.

LG Multi V systems may work best with Method #5 (DDOA) as this method ensures that the occupant has conditioned and filtered code required outdoor air. The required outdoor air may not affect the operation and performance of the Multi V indoor unit.

Due to our policy of continuous product innovation, some specifications may change without notification.
©LG Electronics U.S.A., Inc., Englewood Cliffs, NJ. All rights reserved. “LG” is a registered trademark of LG Corp.

Always use LATS Multi V Software*

Follow these guidelines to properly select and size Multi V system components:

- Zone the building
- Determine the ventilation method
- Select the indoor unit(s)
- Select the outdoor unit
- System sizing checks
  - Calculate the Corrected Capacity Ratio (CCR)
  - Determine the system Combination Ratio (CR)
  - Determine the Running (indoor) Unit Ratio (RUR)

The following procedure should not replace LG's LATS Multi V complimentary selection software, but should be used in conjunction with it. Contact your LG representative to obtain a copy of the software and the user's manual.

When using the LATS Multi V software, the default indoor design day conditions of 80.6°F DB / 67°F WB in Cooling mode and 68°F DB / 56.7°F WB in Heating mode may be adjusted to reflect the designer's preferred indoor room design temperature. These indoor room temperature values are the room thermostat setpoints and should not be confused with entering coil conditions.

⚠ ***Note:*** Data provided in the LATS tree mode diagram or report file is not valid unless the Auto-Piping and System Check routines are run without errors. Errors will be reported immediately in pop-up dialog boxes or red lines surrounding indoor unit(s) and/or along pipe segments. If errors are indicated, modify the pipe system design and rerun LATS.

Zone the Building

Multi V Water II Heat Recovery is a three-pipe system from water source unit to heat recovery unit, and a two-pipe system from heat recovery unit to indoor unit. Indoor units can be in Heating mode or Cooling mode simultaneously, and the designer can combine dissimilar thermal zones.

Multi V II Water Heat Pump is a two-pipe system from water source unit to indoor units. Indoor units can be in Heating mode or Cooling mode, but not simultaneously.

Determine the Ventilation Method

Decide how ventilation air will be introduced to each space. Add ventilation load(s) to the appropriate indoor unit(s) design cooling and heating loads only if the ventilation air treatment system does not provide room neutral air. Some models of Multi V indoor units are factory-provided with or have accessories available that accommodate the direct connection of ventilation ductwork to the unit.

However, there are product limitations and additional considerations that may need to be understood when using direct connection accessories. For more information, contact your LG-applied equipment representative. Go to www.LG-VRF.com to find your representative and technical product information.

⚠ ***Note:*** In all cases, LG recommends ducting pretreated, room neutral, ventilation air directly to the space. When pretreated, ventilation air is provided, remember to deduct the ventilation airload(s) from the total load before sizing the indoor unit(s). Local codes or other professional design guidelines, such as ASHRAE 62.1, will dictate the volume of ventilation air required.

It may be prudent to oversize the dedicated outdoor air system considering there will be a few days of the year when weather conditions exceed the design day conditions. This will minimize the possibility of ventilation air conditions causing the indoor unit's entering air temperature to fall outside the approved design temperature range. For more information on how to properly size a ventilation air pretreatment system, refer to the article, "Selecting DOAS Equipment with Reserve Capacity" by John Murphy, published in the ASHRAE Journal, April 2010.

Select the Indoor Unit(s)

Determine how many indoor units will be required. Refer to Table 1a to obtain the maximum number of indoor units allowed on a system. If the quantity of indoor units exceeds the maximum allowed for the outdoor model selected, consider increasing the size of the outdoor unit or split the indoor units into two groups served by separate outdoor units.

Calculate the entering mixed air conditions for each indoor unit. The mixed-air temperature must be between 57°F and 76°F WB in Cooling mode and between 59°F and 80°F DB in Heating mode.

⚠ ***Note:*** When the indoor unit entering air temperature is outside the cataloged operational limits, the system may continue to operate properly; however, operational abnormalities may occur. These include coil frosting, low or high suction temperature, low or high head pressure, low heating discharge temperature, or complete system shutdown.

* This manual selection process must be verified using LATS Multi V.

Due to our policy of continuous product innovation, some specifications may change without notification.
©LG Electronics U.S.A., Inc., Englewood Cliffs, NJ. All rights reserved. "LG" is a registered trademark of LG Corp.

To calculate the indoor unit entering mixed air temperature:

$$MAT = \frac{(RAT \times \%RA) + (OAT \times \%OA)}{100}$$

MAT = Mixed air temperature
RAT = Return air temperature
OAT = Outdoor air temperature
%RA = Percentage of return air
%OA = Percentage of outdoor air

Select the Water Source Unit (WSU)

The water source unit is capable of operating between 50°F and 113°F (entering water temperature) in the Cooling mode and between 23°F and 113°F (entering water temperature) in the Heating mode. Refer to the capacity data tables starting on page 40 to obtain the nominal unit capacity for heating and cooling. Assume a 100% CR at this point. See "Determine the System Combination Ratio (CR)" below.

Determine the WSU cooling correction factor from Tables 42, 43, 47, 48, 52, 53, 57, and 58. If the overall equivalent pipe length exceeds 295 feet, apply the equivalent length correction factor from Tables 46, 51, 56, and 59. Multiply the selected correction factor by the nominal cooling capacity from Table 41. The resultant is the corrected cooling capacity, which should be at least equal to or greater than the cooling load of space served by the VRF system.

Determine the WSU heating correction factor from Tables 44, 45, 49, 50, 54, and 55. If the overall equivalent pipe length exceeds 295 feet, apply the equivalent length correction factor from Tables 46, 51, 56, and 59. Multiply the selected correction factor by the nominal heating capacity. The resultant is the corrected heating capacity, which should be at least equal to or greater than the heating load of space served by the VRF system.

System Sizing Checks

Determine the System Combination Ratio (CR)

The system CR is a ratio that compares the nominal capacity of the connected indoor units to the WSU nominal capacity.

See the "General Data" section (page 17-34) for the nominal capacity of heat pump and heat recovery units.

For example,

A VRF system has a WSU with a nominal capacity of C and four indoor units having nominal capacity ratings of W, X, Y, and Z respectively, the CR would be determined as follows:

$$CR\% = \left(\frac{W + X + Y + Z}{C}\right) \times 100$$

The system will not operate unless the CR is between 50% and 130%. In most cases, a properly designed system will have a CR from 50% to 100%. If the CR is over 100%, the designer is undersizing the WSU relative to the combined nominal capacity of the connected indoor units.

If the CR falls below 50%, select a smaller WSU or consider adding more indoor units to the system.

If the CR is above 130%, remove indoor units from the system, downsize indoor units, or select a larger WSU. Consider placing one or more units on a separate LG Multi V or Duct-Free Split system. Contact your LG sales representative for more options or engineering ideas.

Calculate the Corrected Capacity Ratio (CCR)

The system's CCR is the building load divided by the WSU corrected capacity. Calculate this ratio for the cooling and heating design days. In both cases, this ratio should never exceed 100%. If it is over 100%, up-size the WSU or change the design and split into two separate systems.

$$CCR\%_{(Clg)} = \left(\frac{\text{Total Cooling Load}}{\text{Corrected Outdoor Unit Capacity}}\right) \times 100 \leq 100\%$$

$$CCR\%_{(Htg)} = \left(\frac{\text{Heating Load}}{\text{Corrected Outdoor Unit Capacity}}\right) \times 100 \leq 100\%$$

Determine the Running Indoor Unit Ratio (RUR)

1. At any time, if the sum of the nominal capacity of indoor units that are turned on is 10% of the WSU's nominal capacity, operational anomalies may occur. See the following references for the nominal capacity of indoor and water source units:
   - "Water Source Unit—Heat Recovery" on page 17
   - "Water Source Unit—Heat Pump" on page 27
   - "Indoor Units" on page 35

For example,

A VRF system has a WSU nominal capacity of C and has four connected indoor units having nominal capacity ratings of W, X, Y, and Z respectively, but indoor units X and Y have been turned off at the zone controller, the RUR would be:

$$RUR\% = \left(\frac{W + Z}{C}\right) \times 100 \geq 10\%$$

Due to our policy of continuous product innovation, some specifications may change without notification.
©LG Electronics U.S.A., Inc., Englewood Cliffs, NJ. All rights reserved. "LG" is a registered trademark of LG Corp.

Table 41: Water Source Unit / Indoor Unit Matching Limitations

Water Source Unit		Indoor Units Sum of Indoor Unit Nominal Cooling Capacities (BTU/h)		
Model	Nominal Cooling (BTU/h)	Maximum Quantity	Minimum Capacity (Btu/h) (50%)[1]	Maximum Capacity (Btu/h) (130%)[2]
ARWB072BA2 / ARWN072BA2	72,000	13	36,000	92,800
ARWB096DA2 / ARWN096DA2	95,900	13	48,000	123,700
ARWB144BA2 / ARWN144BA2	144,000	26	72,000	185,700
ARWB192DA2 / ARWN192DA2	191,100	26	95,600	239,700
ARWB216BA2 / ARWN216BA2	216,000	39	108,000	464,200
ARWB288BA2 / ARWN288BA2	288,000	49	144,000	371,400
ARWB290DA2 / ARWN290DA2	286,600	39	143,300	369,600
ARWB360BA2 / ARWN360BA2	360,000	61	180,000	464,200
ARWB390DA2 / ARWN390DA2	382,200	49	191,100	492,900
ARWB432BA2 / ARWN432BA2	432,000	64	216,000	557,100
ARWB480DA2 / ARWN480DA2	477,800	61	238,900	616,100
ARWB580DA2 / ARWN580DA2	573,400	64	286,700	739,400

Due to our policy of continuous product innovation, some specifications may change without notification.
©LG Electronics U.S.A., Inc., Englewood Cliffs, NJ. All rights reserved. "LG" is a registered trademark of LG Corp.

Water Source Unit—Cooling Correction Factor

1. For each water source unit, calculate the equivalent length of the liquid line from the water source unit to the farthest indoor unit.
2. Determine the elevation difference of farthest indoor unit above or below the water source unit.
3. Find corresponding cooling capacity correction factor in Tables 42 and 43.
4. Multiply the cooling correction factor by the standard cooling capacity.
5. The resultant is the NET cooling capacity.

Repeat these steps for the heating correction factor using Tables 44 and 45.

Table 42: ARWB072BA2, ARWN072BA2, ARWB096DA2, ARWN096DA2—Cooling Correction Factors—Indoor Units above WSU (ft)

	Equiv. Length (ELF)*												
Elevation Differences (ft)	25	33	66	98	131	164	197	230	263	295	328	361	≥394
0	1	0.99	0.97	0.95	0.94	0.92	0.91	0.9	0.88	0.87	0.86	0.84	0.83
25	1	0.99	0.97	0.95	0.94	0.92	0.91	0.89	0.88	0.87	0.86	0.84	0.83
33		0.99	0.97	0.95	0.94	0.92	0.91	0.89	0.88	0.87	0.86	0.84	0.83
66			0.97	0.95	0.94	0.92	0.91	0.89	0.88	0.87	0.86	0.84	0.83
98				0.95	0.93	0.92	0.91	0.89	0.88	0.87	0.85	0.83	0.84
131					0.93	0.92	0.9	0.89	0.88	0.87	0.85	0.83	0.84
164						0.92	0.9	0.89	0.88	0.86	0.85	0.83	0.84

Table 43: ARWB072BA2, ARWN072BA2, ARWB096DA2, ARWN096DA2—Cooling Correction Factors—WSU above Indoor Units (ft)

	Equiv. Length (ELF)*												
Elevation Differences (ft)	25	33	66	98	131	164	197	230	263	295	328	361	≥394
0	1	0.99	0.97	0.95	0.94	0.92	0.91	0.9	0.88	0.87	0.86	0.85	0.84
25	1	0.99	0.97	0.96	0.94	0.92	0.91	0.9	0.88	0.87	0.86	0.85	0.84
33		0.99	0.98	0.96	0.94	0.93	0.91	0.9	0.88	0.87	0.86	0.85	0.84
66			0.98	0.96	0.94	0.93	0.91	0.9	0.88	0.87	0.86	0.85	0.84
98				0.96	0.94	0.93	0.91	0.9	0.89	0.87	0.86	0.85	0.84
131					0.95	0.93	0.91	0.9	0.89	0.87	0.86	0.85	0.84
164						0.93	0.91	0.9	0.89	0.87	0.86	0.85	0.84

Due to our policy of continuous product innovation, some specifications may change without notification.
©LG Electronics U.S.A., Inc., Englewood Cliffs, NJ. All rights reserved. "LG" is a registered trademark of LG Corp.

Table 44: ARWB072BA2, ARWN072BA2, ARWB096DA2, ARWN096DA2—Heating Correction Factors—Indoor Unit above WSU (ft)

Elevation Differences (ft)	25	33	66	98	131	164	197	230	263	≥295
0	1	0.96	0.92	0.88	0.85	0.82	0.8	0.78	0.77	0.75
25	1	0.96	0.92	0.88	0.85	0.82	0.8	0.78	0.77	0.75
33		0.96	0.92	0.88	0.85	0.82	0.8	0.78	0.77	0.75
66			0.92	0.88	0.85	0.82	0.8	0.78	0.77	0.75
98				0.88	0.85	0.82	0.8	0.78	0.77	0.75
131					0.85	0.82	0.8	0.78	0.77	0.75
164						0.82	0.8	0.78	0.77	0.75

Table 45: ARWB072BA2, ARWN072BA2, ARWB096DA2, ARWN096DA2—Heating Correction Factors—WSU above Indoor Units (ft)

Elevation Differences (ft)	25	33	66	98	131	164	197	230	263	≥295
0	1	0.96	0.92	0.88	0.85	0.82	0.8	0.78	0.77	0.75
25	1	0.96	0.92	0.88	0.85	0.82	0.8	0.78	0.77	0.75
33		0.96	0.92	0.88	0.85	0.82	0.8	0.78	0.77	0.75
66			0.92	0.88	0.85	0.82	0.8	0.78	0.77	0.75
98				0.88	0.85	0.82	0.8	0.78	0.77	0.75
131					0.85	0.82	0.8	0.78	0.77	0.75
164						0.82	0.8	0.78	0.77	0.75

Equivalent Length Calculation for Correction Factors (ARWB072BA2, ARWN072BA2, ARWB096DA2, ARWN096DA2)

TEL = (ELM x Correction Factor) + ELB

Where

TEL = Total equivalent length

ELM = Equivalent length to first Y-Branch

ELB = Equivalent length from first Y-Branch to farthest indoor unit

Example:

Given: ELM = 230 feet

ELB = 131 feet

HL = 33 feet

Solution: Overall equivalent length = (230 x 0.5) + 131 = 246 feet

When HL = 33 feet, the cooling capacity correction factor would be approximately 0.88.

Table 46: Equivalent Length Calculation for Correction Factors

Correction Factor	Overall equivalent pipe length	
	<295 feet	≥295 feet
Cooling	1.0	0.5
Heating	1.0	0.2

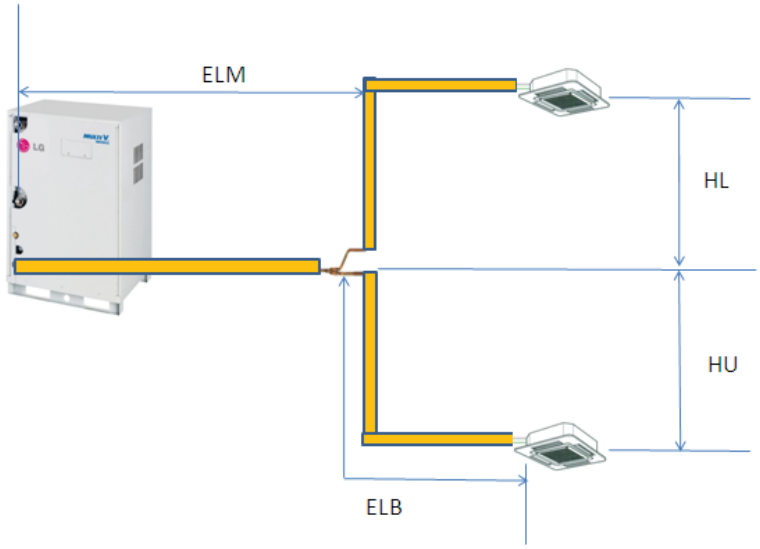

Due to our policy of continuous product innovation, some specifications may change without notification.
©LG Electronics U.S.A., Inc., Englewood Cliffs, NJ. All rights reserved. "LG" is a registered trademark of LG Corp.

EQUIPMENT SELECTION PROCEDURE

Water Source Units (WSU)

Table 47: ARWB144BA2, ARWN144BA2, ARWB192DA2, ARWN192DA2—Cooling Correction Factors—Indoor Units above WSU (ft)

	Equivalent Length (ELF)*												
Elevation Differences (ft)	25	33	66	98	131	164	197	230	263	295	328	361	≥394
0	1	.99	.97	.95	.94	.92	.91	.89	.88	.87	.86	.85	.84
25	1	.99	.97	.95	.94	.92	.91	.89	.88	.87	.86	.84	.83
33		.99	.97	.95	.94	.92	.91	.89	.88	.87	.86	.84	.83
66			.97	.95	.94	.92	.91	.89	.88	.87	.85	.84	.83
98				.95	.93	.92	.90	.89	.88	.87	.85	.84	.83
131					.93	.92	.90	.89	.88	.86	.85	.84	.83
164						.92	.90	.89	.88	.86	.85	.84	.83

Table 48: ARWB144BA2, ARWN144BA2, ARWB192DA2, ARWN192DA2—Cooling Correction Factors—WSU above Indoor Units (ft)

	Equivalent Length (ELF)*												
Elevation Differences (ft)	25	33	66	98	131	164	197	230	263	295	328	361	≥394
0	1	0.99	0.97	0.95	0.94	0.92	0.91	0.89	0.88	0.87	0.86	0.85	0.84
25	1	0.99	0.97	0.96	0.94	0.92	0.91	0.9	0.88	0.87	0.86	0.85	0.84
33		0.99	0.98	0.96	0.94	0.92	0.91	0.9	0.88	0.87	0.86	0.85	0.84
66			0.98	0.96	0.94	0.93	0.91	0.9	0.88	0.87	0.86	0.85	0.84
98				0.96	0.94	0.93	0.91	0.9	0.89	0.87	0.86	0.85	0.84
131					0.95	0.93	0.91	0.9	0.89	0.87	0.86	0.85	0.84
164						0.93	0.91	0.9	0.89	0.87	0.86	0.85	0.84

Table 49: ARWB144BA2, ARWN144BA2, ARWB192DA2, ARWN192DA2—Heating Correction Factors—Indoor Units above WSU (ft)

	Equivalent Length (ELF)*										
Elevation Differences (ft)	25	33	66	98	131	164	197	230	263	295	≥328
0	1	1	0.94	0.9	0.87	0.84	0.82	0.8	0.78	0.76	0.75
25	1	1	0.94	0.9	0.87	0.84	0.82	0.8	0.78	0.76	0.75
33		1	0.94	0.9	0.87	0.84	0.82	0.8	0.78	0.76	0.75
66			0.94	0.9	0.87	0.84	0.82	0.8	0.78	0.76	0.75
98				0.9	0.87	0.84	0.82	0.8	0.78	0.76	0.75
131					0.87	0.84	0.82	0.8	0.78	0.76	0.75
164						0.84	0.82	0.8	0.78	0.76	0.75

Table 50: ARWB144BA2, ARWN144BA2, ARWB192DA2, ARWN192DA2—Heating Correction Factors—WSU above Indoor Units (ft)

	Equivalent Length (ELF)*										
Elevation Differences (ft)	25	33	66	98	131	164	197	230	263	295	≥328
0	1	1	0.94	0.9	0.87	0.84	0.82	0.8	0.78	0.76	0.75
25	1	1	0.94	0.9	0.87	0.84	0.82	0.8	0.78	0.76	0.75
33		1	0.94	0.9	0.87	0.84	0.82	0.8	0.78	0.76	0.75
66			0.94	0.9	0.87	0.84	0.82	0.8	0.78	0.76	0.75
98				0.9	0.87	0.84	0.82	0.8	0.78	0.76	0.75
131					0.87	0.84	0.82	0.8	0.78	0.76	0.75
164						0.84	0.82	0.8	0.78	0.76	0.75

*http://www.achrnews.com/NEWS/Home/Images/Figures6-BIG.jpg

Due to our policy of continuous product innovation, some specifications may change without notification.
©LG Electronics U.S.A., Inc., Englewood Cliffs, NJ. All rights reserved. "LG" is a registered trademark of LG Corp.

Equivalent Length Calculation for Correction Factors for ARWB144BA2, ARWN144BA2, ARWB192DA2, ARWN192DA2

TEL = (ELM x Correction Factor) + ELB

Where

TEL = Total equivalent length

ELM = Equivalent length to first Y-Branch

ELB = Equivalent length from first Y-branch to farthest indoor unit

Table 51: Equivalent Length Calculation for Correction Factors (ARWB144BA2, ARWB192DA2)

Correction Factor	Overall Equivalent Pipe Length	
	<295 feet	≥295 feet
Cooling	1.0	0.5
Heating	1.0	0.3

Table 52: ARWB216BA2, ARWN216BA2, ARWB290DA2, ARWN290DA2—Cooling Correction Factors—Indoor Units above WSU (ft)

	Equivalent Length (ELF)*												
Elevation Differences (ft)	25	33	66	98	131	164	197	230	263	295	328	361	≥394
0	1	0.99	0.97	0.95	0.94	0.93	0.92	0.9	0.89	0.88	0.87	0.86	0.85
25	1	0.99	0.97	0.95	0.94	0.93	0.92	0.9	0.89	0.88	0.87	0.86	0.85
33		0.99	0.97	0.95	0.94	0.93	0.92	0.9	0.89	0.88	0.87	0.86	0.85
66			0.97	0.95	0.94	0.93	0.91	0.9	0.89	0.88	0.87	0.86	0.85
98				0.95	0.94	0.93	0.91	0.9	0.89	0.88	0.87	0.86	0.85
131					0.94	0.93	0.91	0.9	0.89	0.88	0.87	0.86	0.85
164						0.92	0.91	0.9	0.89	0.88	0.87	0.86	0.85

Table 53: ARWB216BA2, ARWN216BA2, ARWB290DA2, ARWN290DA2—Cooling correction factors—WSU above Indoor Units (ft)

	Equivalent Length (ELF)*												
Elevation Differences (ft)	25	33	66	98	131	164	197	230	263	295	328	361	≥394
0	1	0.99	0.97	0.96	0.94	0.93	0.92	0.9	0.89	0.88	0.87	0.86	0.85
25	1	0.99	0.98	0.96	0.95	0.93	0.92	0.91	0.89	0.88	0.87	0.86	0.85
33		0.99	0.98	0.96	0.95	0.93	0.92	0.91	0.89	0.88	0.87	0.86	0.85
66			0.98	0.96	0.95	0.93	0.92	0.91	0.9	0.88	0.87	0.86	0.85
98				0.96	0.95	0.93	0.92	0.91	0.9	0.88	0.87	0.86	0.85
131					0.95	0.94	0.92	0.91	0.9	0.89	0.87	0.86	0.85
164						0.94	0.92	0.91	0.9	0.89	0.87	0.86	0.85

*http://www.achrnews.com/NEWS/Home/Images/Figures6-BIG.jpg

Due to our policy of continuous product innovation, some specifications may change without notification.
©LG Electronics U.S.A., Inc., Englewood Cliffs, NJ. All rights reserved. "LG" is a registered trademark of LG Corp.

Table 54: ARWB216BA2, ARWN216BA2, ARWB290DA2, ARWN290DA2—Heating Correction Factors— Indoor Units above WSU (ft)

	Equivalent Length (ELF)*											
Elevation Differences (ft)	33	66	98	131	164	197	230	263	295	328	361	≥394
0	1	1	1	0.97	0.92	0.89	0.86	0.83	0.81	0.79	0.77	0.75
7.5	1	1	1	0.97	0.92	0.89	0.86	0.83	0.81	0.79	0.77	0.75
10		1	1	0.97	0.92	0.89	0.86	0.83	0.81	0.79	0.77	0.75
20			1	0.97	0.92	0.89	0.86	0.83	0.81	0.79	0.77	0.75
30				0.97	0.92	0.89	0.86	0.83	0.81	0.79	0.77	0.75
40					0.92	0.89	0.86	0.83	0.81	0.79	0.77	0.75
50						0.89	0.86	0.83	0.81	0.79	0.77	0.75

Table 55: ARWB216BA2, ARWN216BA2, ARWB290DA2, ARWN290DA2—Heating correction factors—WSU above Indoor Units (ft)

	Equivalent Length (ELF)*											
Elevation Differences (ft)	33	66	98	131	164	197	230	263	295	328	361	≥394
0	1	1	1	0.97	0.92	0.89	0.86	0.83	0.81	0.79	0.77	0.75
7.5	1	1	1	0.97	0.92	0.89	0.86	0.83	0.81	0.79	0.77	0.75
10		1	1	0.97	0.92	0.89	0.86	0.83	0.81	0.79	0.77	0.75
20			1	0.97	0.92	0.89	0.86	0.83	0.81	0.79	0.77	0.75
30				0.97	0.92	0.89	0.86	0.83	0.81	0.79	0.77	0.75
40					0.92	0.89	0.86	0.83	0.81	0.79	0.77	0.75
50						0.89	0.86	0.83	0.81	0.79	0.77	0.75

*http://www.achrnews.com/NEWS/Home/Images/Figures6-BIG.jpg

Equivalent Length Calculation for Correction Factors for ARWB216BA2, ARWN216BA2, ARWB-290DA2, ARWN290DA2

Total equivalent length (TEL) = (Equivalent length to first Y-Branch (ELM) x correction factor) + Equivalent length from first Y-Branch to farthest indoor unit (ELB)

TEL = (ELM x Correction Factor) + ELB

Where

TEL = Total equivalent length

ELM = Equivalent length to first Y-Branch

ELB = Equivalent length from first Y-Branch to farthest indoor unit

Table 56: Equivalent Length Calculation for Correction Factors (ARWB216BA2, ARWB290DA2)

Correction Factor	Overall Equivalent Pipe Length	
	<295 feet	≥295 feet
Cooling	1.0	0.5
Heating	1.0	0.4

Due to our policy of continuous product innovation, some specifications may change without notification.
©LG Electronics U.S.A., Inc., Englewood Cliffs, NJ. All rights reserved. "LG" is a registered trademark of LG Corp.

Table 57: ARWB288BA2, ARWN288BA2, ARWB360BA2, ARWN360BA2, ARWB390DA2, ARWN390DA2, ARWB432BA2, ARWN432BA2, ARWB480DA2, ARWN480DA2, ARWB580DA2, ARWN580DA2—Cooling Correction Factors—Indoor Units above WSU (ft)

	Equivalent Length (ELF)*																	
Elevation Differences (ft)	25	33	66	98	131	164	197	230	263	295	328	361	394	427	460	493	526	≥575.5
0	1	0.99	0.98	0.96	0.95	0.94	0.93	0.92	0.9	0.89	0.88	0.88	0.87	0.86	0.85	0.84	0.83	0.82
25	0.99	0.99	0.98	0.96	0.95	0.94	0.93	0.91	0.9	0.89	0.88	0.87	0.87	0.86	0.85	0.84	0.83	0.82
33		0.99	0.97	0.96	0.95	0.94	0.93	0.91	0.9	0.89	0.88	0.87	0.87	0.86	0.85	0.84	0.83	0.82
66			0.97	0.96	0.95	0.94	0.92	0.91	0.9	0.89	0.88	0.87	0.86	0.86	0.85	0.84	0.83	0.82
98				0.96	0.95	0.93	0.92	0.91	0.9	0.89	0.88	0.87	0.86	0.86	0.85	0.84	0.83	0.82
131					0.95	0.93	0.92	0.91	0.9	0.89	0.88	0.87	0.86	0.86	0.85	0.84	0.83	0.82
164						0.93	0.92	0.91	0.9	0.89	0.88	0.87	0.86	0.85	0.85	0.84	0.83	0.82

Table 58: ARWB288BA2, ARWN288BA2, ARWB360BA2, ARWN360BA2, ARWB390DA2, ARWN390DA2, ARWB432BA2, ARWN432BA2, ARWB480DA2, ARWN480DA2, ARWB580DA2, ARWN580DA2—Cooling Correction Factors—WSU above Indoor Units (ft)

	Equivalent Length (ELF)*																	
Elevation Differences (ft)	25	33	66	98	131	164	197	230	263	295	328	361	394	427	460	493	526	≥575.5
0	1	0.99	0.98	0.96	0.95	0.94	0.93	0.92	0.9	0.89	0.88	0.88	0.87	0.86	0.85	0.84	0.83	0.82
25	1	0.99	0.98	0.96	0.95	0.94	0.93	0.92	0.91	0.9	0.89	0.88	0.87	0.86	0.85	0.84	0.83	0.82
33		0.99	0.98	0.96	0.95	0.94	0.93	0.92	0.91	0.9	0.89	0.88	0.87	0.86	0.85	0.84	0.83	0.82
66			0.98	0.97	0.95	0.94	0.93	0.92	0.91	0.9	0.89	0.88	0.87	0.86	0.85	0.84	0.83	0.82
98				0.97	0.95	0.94	0.93	0.92	0.91	0.9	0.89	0.88	0.87	0.86	0.85	0.84	0.84	0.82
131					0.95	0.94	0.93	0.92	0.91	0.9	0.89	0.88	0.87	0.86	0.85	0.84	0.84	0.83
164						0.94	0.93	0.92	0.91	0.9	0.89	0.88	0.87	0.86	0.85	0.84	0.84	0.83

ARWB288BA2, ARWN288BA2, ARWB360BA2, ARWN360BA2, ARWB390DA2, ARWN390DA2, ARWB432BA2, ARWN432BA2, ARWB480DA2, ARWN480DA2, ARWB580DA2, ARWN580DA2 Heating Correction Factors

All are 1.0. There is no calculation required.

ARWB288BA2, ARWN288BA2, ARWB360BA2, ARWN360BA2, ARWB390DA2, ARWN390DA2, ARWB432BA2, ARWN432BA2, ARWB480DA2, ARWN480DA2, ARWB580DA2, ARWN580DA2 Equivalent Length Calculation Correction Factors

TEL = (ELM x Correction Factor) + ELB

Where

TEL = Total equivalent length

ELM = Equivalent length to first Y-Branch

ELB = Equivalent length from first Y-Branch to farthest indoor unit

Table 59: Equivalent Length Calculation for Correction Factors

Correction Factor	Overall equivalent pipe length	
	<295 feet	≧ 295 feet
Cooling	1.0	1.0
Heating	1.0	0.4

Table 60: Altitude Correction Factor

Altitude (feet)	Sea Level	1,000	2,000	3,000	4,000	5,000	6,000	7,000	8,000	9,000	10,000	11,000	12,000
Wet Coil	1.00	0.99	0.98	0.98	0.97	0.96	0.95	0.94	0.94	0.93	0.92	0.91	0.90
Dry Coil	1.00	0.98	0.97	0.95	0.94	0.92	0.90	0.89	0.87	0.86	0.84	0.82	0.81

Due to our policy of continuous product innovation, some specifications may change without notification.
©LG Electronics U.S.A., Inc., Englewood Cliffs, NJ. All rights reserved. "LG" is a registered trademark of LG Corp.

PLACEMENT CONSIDERATIONS

Water Source Unit (WSU) Placement

The water source unit must be installed indoors in a mechanical room. The mechanical room must be designed such that equipment vibration or noise does not affect surrounding rooms and is properly ventilated or conditioned to maintain temperature range. Mechanical room temperature is required to be maintained between 32°F and 104°F. The water source unit will reject heat to the mechanical room. See the "General Data" on page 17 for heat rejected to the equipment room.

The water source unit must also be located where the refrigerant pipe distance does not exceed the design limits. Location of the water source unit should minimize refrigerant piping in order to minimize materials, labor, and refrigerant charge.

The underlying structure or foundation must be designed per local codes and support the weight of the unit. Units can be stacked above each other as long as each water source unit is independently supported. Minimum clearances must be maintained either per recommendations shown in Figures 36–38 or local codes, whichever is greater.

The mechanical room floor must be waterproof. Each water source unit requires a condensate drain to be piped to the nearest floor drain. Periodic flushing of the water heat exchanger will be required, and a floor drain will help facilitate this maintenance.

Avoid exposing the water source unit to oil, steam, combustible gases, sulfur, or other corrosive environments. Avoid exposure to electromagnetic waves from equipment including, but not limited to, generators, MRI equipment, or other equipment that emits electromagnetic waves.

When piping, towers, or other system components that contain water are exposed to areas where the temperature may fall below 32°F, antifreeze solution must be used. Freezing of the heat source water will damage the plate heat exchanger. Antifreeze solution includes proper mixtures of ethylene glycol, propylene glycol, or methanol to the water to prevent freezing. Addition of water heater/boiler to maintain minimum temperatures should be considered.

Figure 36: Individual Installation—Single Frame

The required minimum space for installation and maintenance is shown below.

⚠ ***Note:*** All units in inches.

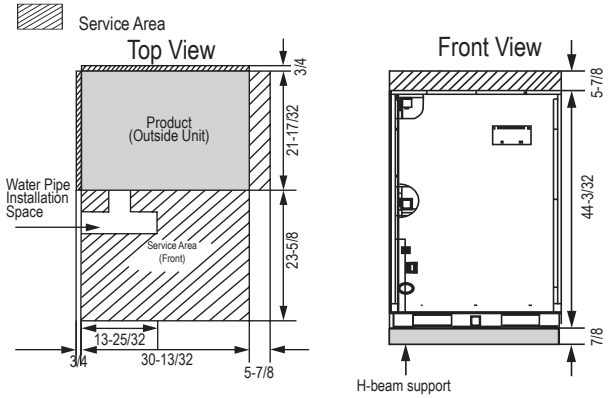

Figure 37: 2 Layer Installation

⚠ ***Note:*** All units in inches.

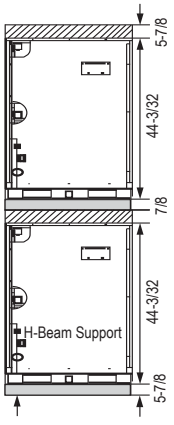

Figure 38: Collective/Continuous Installation—Dual and Triple Frame

Space required for collective installation, continuous installation, and series installation is shown below considering passage for air and people.

⚠ ***Note:*** All units in inches.

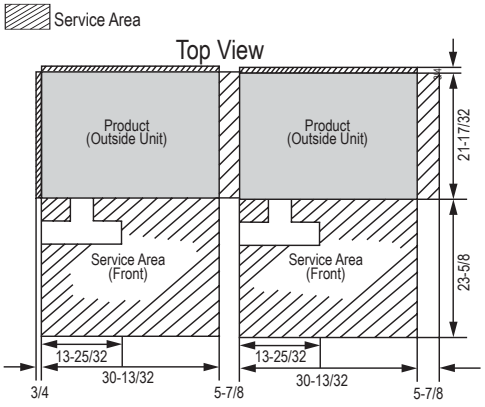

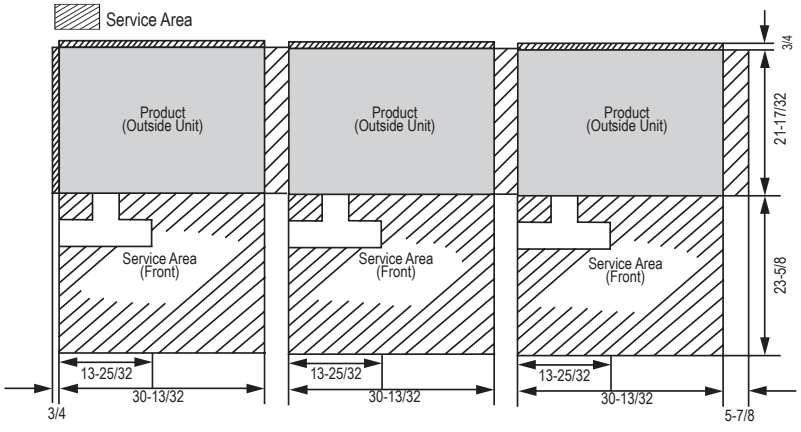

System Engineering

Due to our policy of continuous product innovation, some specifications may change without notification.
©LG Electronics U.S.A., Inc., Englewood Cliffs, NJ. All rights reserved. "LG" is a registered trademark of LG Corp.

Figure 39: Pipe connection between water source units

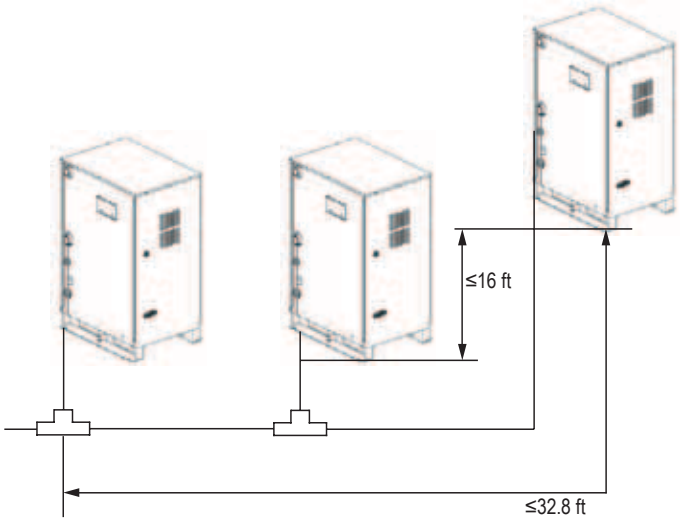

Figure 41: Example of **incorrect** installation

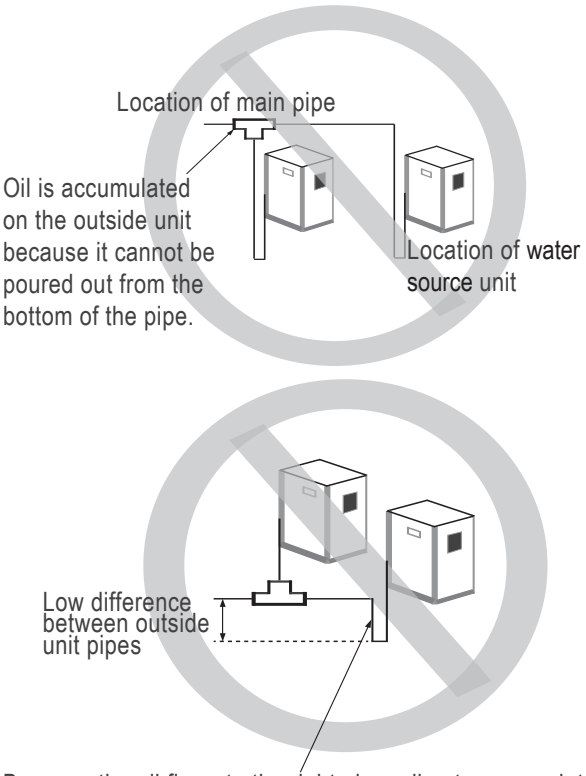

Because the oil flows to the right pipe, oil gets accumulated on the outside unit on the lower side until the outside unit stops.

Figure 40: When pipe distance between water source units exceeds 6.6 ft

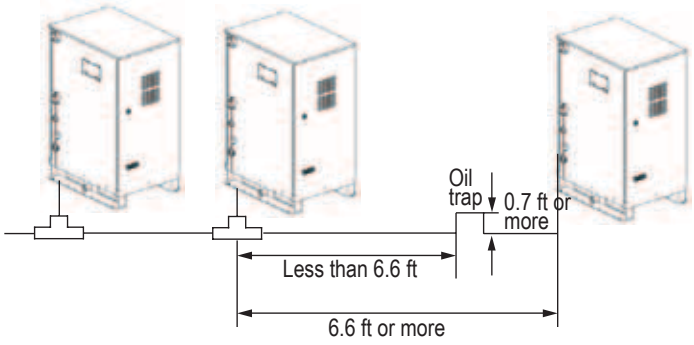

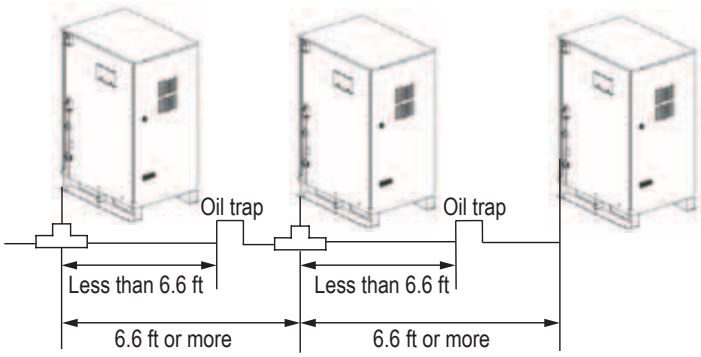

Due to our policy of continuous product innovation, some specifications may change without notification.
©LG Electronics U.S.A., Inc., Englewood Cliffs, NJ. All rights reserved. "LG" is a registered trademark of LG Corp.

PLACEMENT CONSIDERATIONS

Heat Recovery (HR) Unit Placement

HR unit should be located per following conditions:

- HR unit must be installed indoors.
- HR unit must be installed level and upright position.
- Refrigerant pipe must not exceed limits.
- Avoid strong radiation or heat source areas.
- Avoid oil spattering, vapor spray, and high frequency noise areas.
- Install unit above areas that are not sensitive to noise.
- Condensate drain piping not required.

Figure 42: Minimum Service Clearances for HR Box (All units in inches)

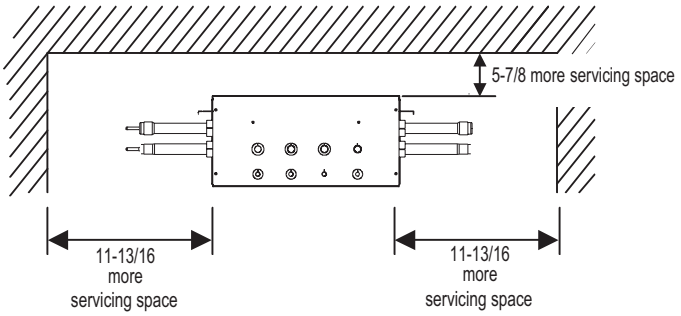

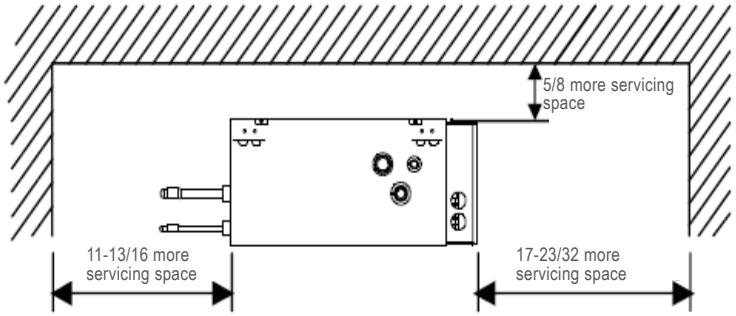

Figure 43: Dimensions for HR Boxes (All units in inches)

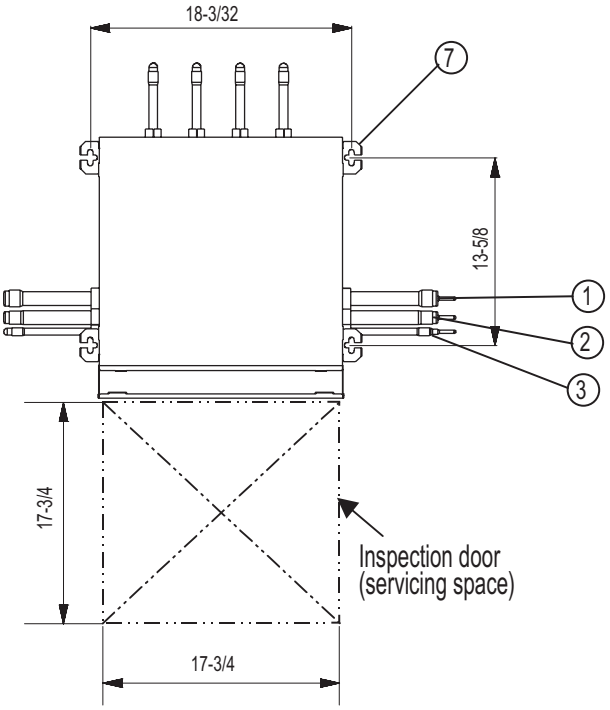

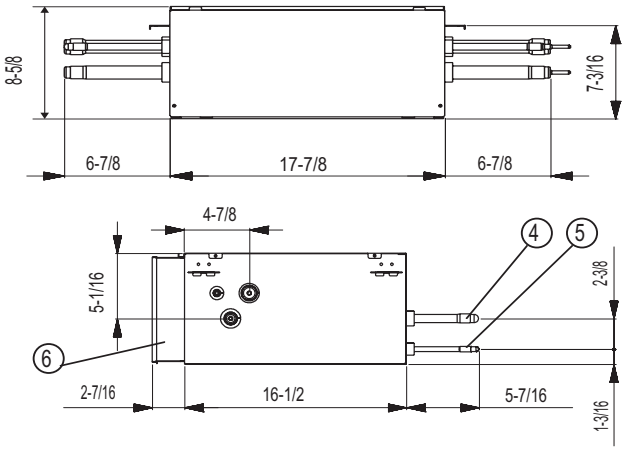

Tag Number	Part Name	Connection Size(in)/Type	
		PRHR041A/031A	PRHR021A
1	Low Pressure Gas pipe connection port	1-1/8 Braze	7/8 Braze
2	High Pressure Gas pipe connection port	7/8 Braze	3/4 Braze
3	Liquid pipe connection port	1/2 Braze	3/8 Braze
4	Indoor unit gas pipe connection port	5/8 Braze	5/8 Braze
5	Indoor unit liquid pipe connection port	3/8 Braze	3/8 Braze
6	Control Box	—	—
7	Hanger bracket		

Figure 44: HR Types

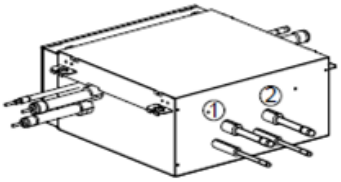

PRHR021A

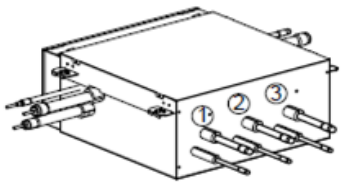

PRHR031A

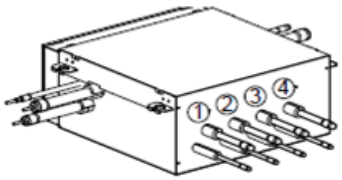

PRHR041A

Each heat recovery unit has a capacity up to 160,000 BTU.
Heat recovery units connected in series have a total capacity up to 160,000 BTU per series string. Series string is defined as heat recovery units piped in series at the same elevation.
Elevation difference between heat recovery units connected in series is not permitted.
Each port on a heat recovery unit has a capacity up to 48,000 BTU.
If an indoor unit larger than 48,00 BTU is to be used, two ports must be twinned using a reverse Y-Branch.
Connect largest indoor unit to first port of heat recovery unit.

Due to our policy of continuous product innovation, some specifications may change without notification.
©LG Electronics U.S.A., Inc., Englewood Cliffs, NJ. All rights reserved. "LG" is a registered trademark of LG Corp.

Refrigerant Piping

Refrigerant piping is one of the most critical elements of the Multi V Water system. The following limits to pipe length must be followed in the design of the refrigerant pipe system:

- The total pipe length from the water source unit to every indoor unit = 1640 feet.
- The longest equivalent pipe length from the water source unit to the farthest indoor unit = 738 feet.
- The longest pipe length after the first branch = 295 feet.
- Difference in height (water source unit above/below indoor unit) = 164 feet.
- Difference in height (indoor unit to indoor unit) = 49 feet.
- The longest pipe length water source unit to the farthest indoor unit = 656 feet.

Figure 45: Refrigerant Piping

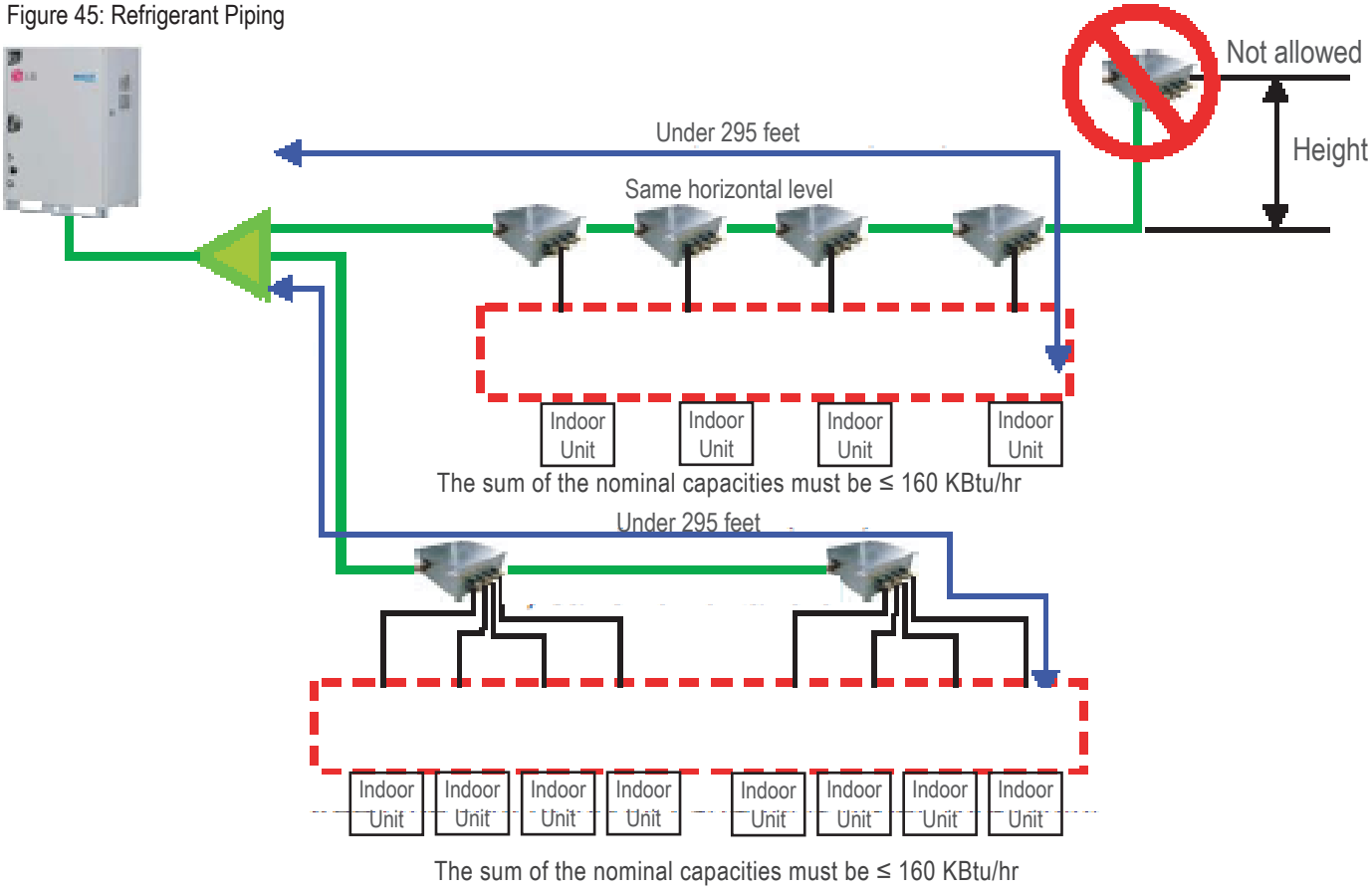

Due to our policy of continuous product innovation, some specifications may change without notification.
©LG Electronics U.S.A., Inc., Englewood Cliffs, NJ. All rights reserved. "LG" is a registered trademark of LG Corp.

Piping Design Software (LATS)

LG's LATS Multi V software makes designing the refrigerant system easy. The piping system can be entered manually into LATS from a one-line pipe diagram. If the building architectural CAD file (.dxf format) is available, LATS CAD mode will be able to import the CAD file. Multi V Water source units, HR units, and indoor units can be selected from a drag and drop list, and lines will be drawn to connect the units. LATS will size the refrigerant piping, certify the design, and provide a detailed materials report, a system schematic, and a CAD export file when CAD mode is used.

Figure 46: LATS Software

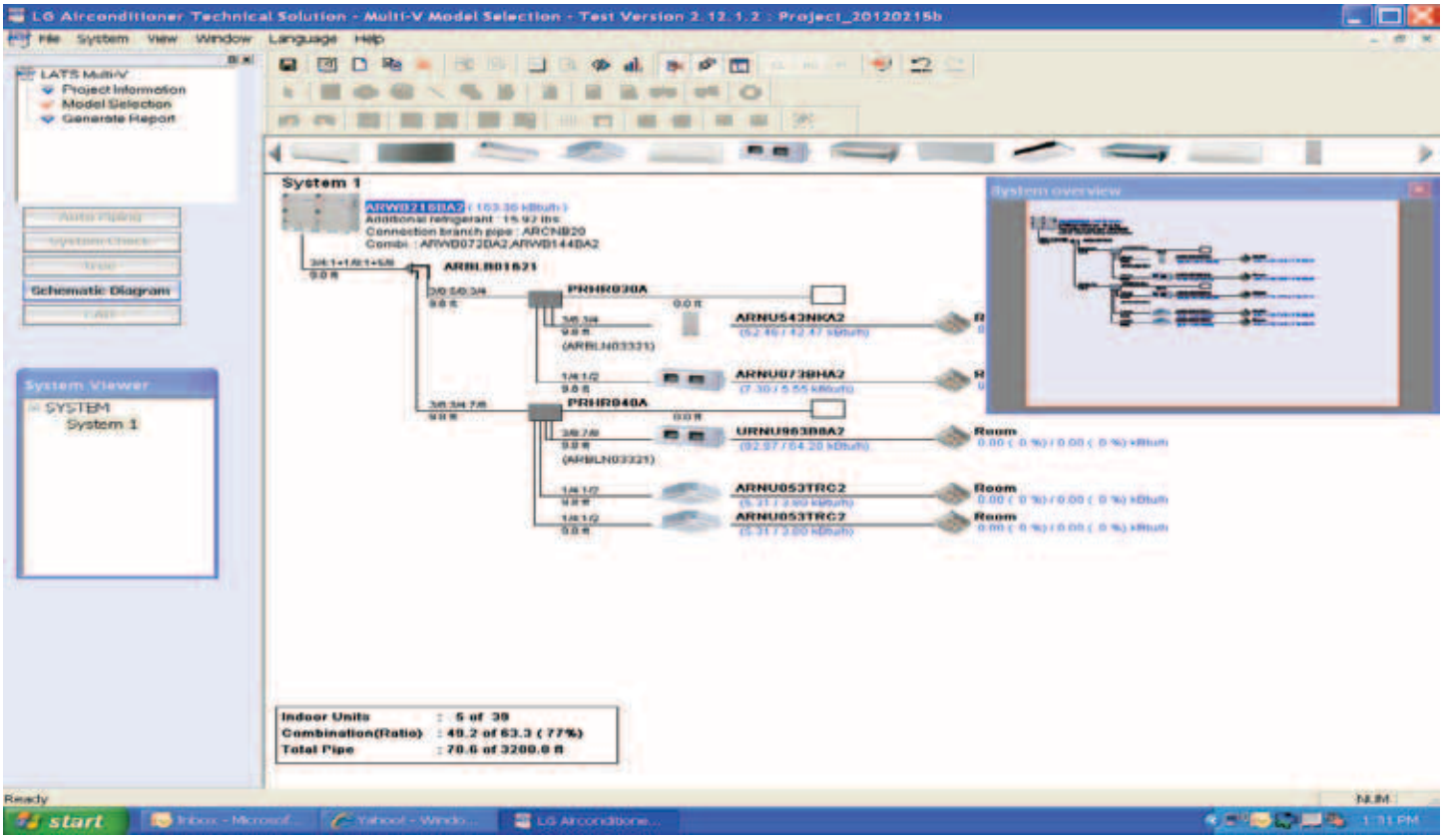

Refrigerant Piping Quality Assurance

To ensure that the refrigerant piping design meets LG's quality standards, a LATS refrigerant piping design must be provided with every Multi V Water order. Following the installation, if any changes or variations to the design were necessary, an "as-built" LATS piping design must be provided to LG prior to system commissioning.

Due to our policy of continuous product innovation, some specifications may change without notification.
©LG Electronics U.S.A., Inc., Englewood Cliffs, NJ. All rights reserved. "LG" is a registered trademark of LG Corp.

Definitions

Main:	The piping segment between the water source unit and the first Y-Branch
Branch:	A segment of pipe between two Y-Branches
Run-out:	The segment of pipe connecting an indoor unit to a Y-Branch
Physical Pipe Length:	Actual length of straight segment(s) of pipe
Equivalent Pipe Length:	Actual length of pipe plus equivalent lengths of elbows, Y-Branches, and valves

Layout Procedure

1. Draft a one-line diagram of the proposed piping system connecting the water source unit to HR units and indoor units. Follow the pipe limitations listed at the beginning of this section.
2. Calculate the physical length of each pipe segment and note it on the drawing.
3. Calculate the equivalent pipe length of each pipe segment.
4. Input the pipe lengths into the LATS software and perform *Auto Pipe Sizing* check and *System* check. LATS will automatically calculate pipe sizes.

Y-Branches

LG-supplied Y-Branches must be used at each transition. Field-supplied T-fittings or Y-Branches will not be accepted. Each LG-supplied Y-Branch kit comes with two Y-Branches for indoor units, three Y-Branches for HR units, step-down pipe reducers, and molded peel-n-stick insulation covers.

Y-Branches must be installed in a level position. Y-Branches cannot be installed in a pipe chase or other concealed space where periodic visual inspection is impaired. Specify inspection doors to access concealed fittings. The first Y-Branch must be located more than three feet from the water source unit. Provide a minimum of three feet between each Y-Branch and between the Y-Branch and indoor unit. The equivalent pipe length of each Y-Branch (1.6 feet) must be added to each pipe segment entered into LATS.

Elbows

Field-supplied elbows are allowed; however, the designer should be cautious of the quantity of fittings used and account for the additional pressure losses in the equivalent pipe length calculation for each branch. The equivalent pipe length of each elbow must be added to each pipe segment in the LATS program. See Table 61 for the equivalent lengths of elbows.

Ball Valves

Field-supplied full port ball valves with shrader ports should be installed at each indoor unit with the shrader port on the indoor unit side of the valve. Ball valves should be rated for R410A refrigerant. If ball valves are installed and an indoor unit needs to be repaired, unaffected indoor units can remain operational and reclamation of refrigerant can be restricted to a single indoor unit. If ball valves are not installed, when a single indoor unit requires repair, the entire system will need to be shut down and evacuated.

The equivalent length of a full port ball valve is the physical length of the valve. Ignore the valves and treat as strait pipe. A full port ball valve has the same bore diameter as the connected pipe.

Due to our policy of continuous product innovation, some specifications may change without notification.
©LG Electronics U.S.A., Inc., Englewood Cliffs, NJ. All rights reserved. "LG" is a registered trademark of LG Corp.

Table 61: Fitting Losses in Equivalent Feet of Pipe

inch	1/4	3/8	1/2	5/8	3/4	7/8	1	1-1/8	1-1/4	1-3/8	1-1/2	1-5/8	1-3/4	2-1/8
Long Radius Elbow (ft)	0.5	0.6	0.7	0.8	1.2	1.3	1.5	1.6	1.8	2.0	2.1	2.3	2.5	2.8
Y-Branch (ft)	1.6													
Header (ft)	3.3													
HR Unit (ft)	8.2													

No Pipe Size Substitutions

Pipe sizes shown on the LATS refrigerant piping report must be followed exactly. Substituting larger or smaller pipe sizes causes the system to malfunction.

Never Use Oil Traps, Sight Glasses, or Filter-Dryers

The Multi V Water system is provided with redundant systems that ensure oil is properly returned to the compressor. Oil traps, sight glasses, and filter dryers are detrimental to proper oil return, so the designer and installer must verify the refrigerant piping system is free of traps, sagging pipe, sight glasses, and filter dryers.

Pipe Slope

The horizontal pipe slope cannot exceed 10° up or down.

Obstacles

When an obstacle, such as an I-Beam, is in the path of the refrigerant pipe run, it is best practice to route the pipe over the obstacle. If there is not adequate space to route the insulated pipe over the obstacle, route the pipe under the obstacle as a last resort. In both cases, it is imperative that the length of the horizontal section of the pipe be three times the vertical rise/drop as shown in Figure 47.

Figure 47: Installing piping above and below an obstacle

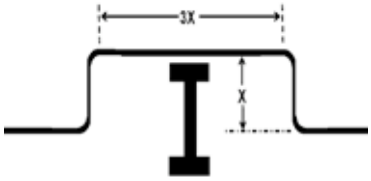

a. Above an obstacle

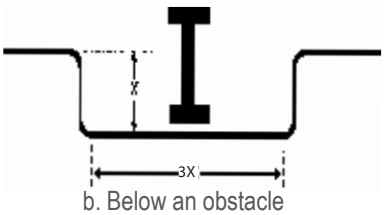

b. Below an obstacle

Condensate Drain Piping

The water source unit requires condensate drain piping. Condensate drain pipe is constructed with materials approved by local code. All indoor units require condensate drain piping.

Refrigerant Safety Standards

ASHRAE Standards 15 and 34 address refrigerant safety and the maximum allowable concentration of refrigerant in an occupied space. Refrigerant will dissipate into the atmosphere, but a certain volume of air is required to safely dissipate the refrigerant. For R410A refrigerant, the maximum allowable concentration of refrigerant is 25 lbs per 1000 cubic feet of occupied space. Buildings with 24-hour occupancy allow half of that concentration.

If a VRF system develops a refrigerant leak, the entire refrigerant charge of the system will dump into the area where the leak occurs. To meet ASHRAE 15 and 34 standards, the smallest room volume on the system must be calculated and compared to the maximum allowable concentration. If the concentration level is higher than allowed, use one of the following design suggestions to eliminate the problem:

- Split double and triple chassis systems into single chassis systems, which have lower refrigerant charges.
- Add transfer grilles in the ceiling or walls of the smaller rooms to increase the volume of the room.
- Remove the smallest space from the system and serve it with a smaller mini-split system.

Due to our policy of continuous product innovation, some specifications may change without notification.
©LG Electronics U.S.A., Inc., Englewood Cliffs, NJ. All rights reserved. "LG" is a registered trademark of LG Corp.

Heat Recovery Dual-Frame System Connections

Figure 48: Heat Recovery Dual Frame Connection Pipe Sizes

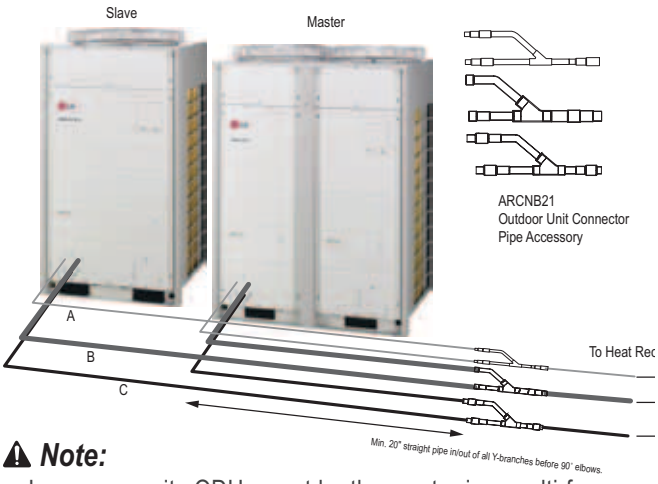

⚠ *Note:*

- Larger-capacity ODUs must be the master in a multi-frame system.
- Single-compressor ODUs (72,000 and 96,000 Btu/h capacity) cannot be the master ODU in a multi-frame system.
- Master ODU capacity must be greater than or equal to the slave1 ODU capacity.

Heat Recovery Triple-Frame System Connections

Figure 49: Heat Recovery Triple-Frame Connections



⚠ *Note:*

- Larger-capacity ODUs must be the master in a multi-frame system.
- Single-compressor ODUs (72,000 and 96,000 Btu/h capacity) cannot be the master ODU in a multi-frame system.
- Master ODU capacity must be greater than or equal to the slave1 ODU capacity, and where applicable, slave1 ODU capacity must be greater than or equal to the slave2 ODU capacity.

Due to our policy of continuous product innovation, some specifications may change without notification.
©LG Electronics U.S.A., Inc., Englewood Cliffs, NJ. All rights reserved. "LG" is a registered trademark of LG Corp.

Heat Pump Dual-Frame System Connections

Figure 50: Heat Pump Dual Frame Connection Pipe Sizes

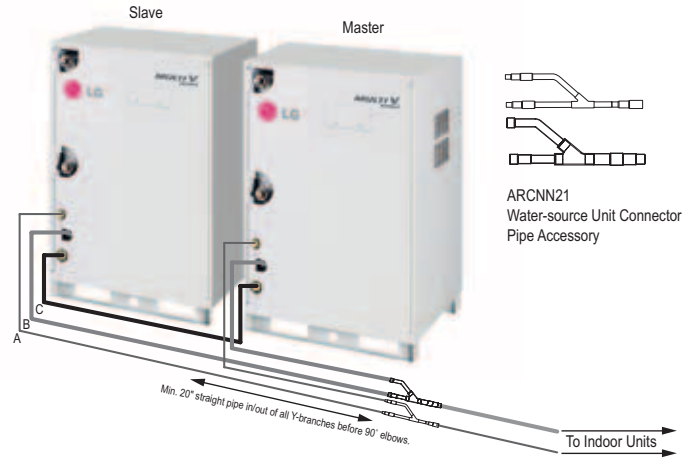

⚠ *Note:*

- Larger-capacity ODUs must be the master in a multi-frame system.
- Single-compressor ODUs (72,000 and 96,000 Btu/h capacity) cannot be the master ODU in a multi-frame system.

Heat Pump Triple-Frame System Connections

Figure 51: Heat Pump Triple-Frame Connections



⚠ *Note:*

- Larger-capacity ODUs must be the master in a multi-frame system.
- Single-compressor ODUs (72,000 and 96,000 Btu/h capacity) cannot be the master ODU in a multi-frame system.
- Master ODU capacity must be greater than or equal to the slave1 ODU capacity, and where applicable, slave1 ODU capacity must be greater than or equal to the slave2 ODU capacity.

Due to our policy of continuous product innovation, some specifications may change without notification.
©LG Electronics U.S.A., Inc., Englewood Cliffs, NJ. All rights reserved. "LG" is a registered trademark of LG Corp.

Table 62: Multi V Water Multi Frame Piping

Heat Pump										
Nominal Tons	Combination Model Numbers	Individual Component Numbers			Liquid	Vapor	Common			
		Master	Slave		(A)	(B)	(C)			
18	ARWN216BA2	ARWN144BA2	ARWN072BA2		3/8	7/8	3/4			
24	ARWN288BA2	ARWN144BA2	ARWN144BA2		1/2	1-1/8	3/4			
24	ARWN290DA2	ARWN192DA2	ARWN096DA2		3/8	7/8	3/4			
32	ARWN390DA2	ARWN192DA2	ARWN192DA2		1/2	1-1/8	3/4			
Nominal Tons	Combination Model Numbers	Individual Component Numbers			Liquid	Vapor	Common	Vapor	Common	Common
		Master	Slave1	Slave2	(A1)	(A2)	(B1)	(B2)	(C1)	(C2)
30	ARWN360BA2	ARWN144BA2	ARWN144BA2	ARWN072BA2	3/8	5/8	7/8	1-3/8	3/4	3/4
36	ARWN432BA2	ARWN144BA2	ARWN144BA2	ARWN144BA2	1/2	3/4	1-1/8	1-5/8	3/4	3/4
40	ARWN480DA2	ARWN192DA2	ARWN192DA2	ARWN096DA2	3/8	5/8	7/8	1-3/8	3/4	3/4
48	ARWN580DA2	ARWN192DA2	ARWN192DA2	ARWN192DA2	1/2	3/4	1-1/8	1-5/8	3/4	3/4

Heat Recovery										
Nominal Tons	Combination Model Numbers	Individual Component Numbers			Liquid	Low Vapor	High Vapor			
		Master	Slave		(A)	(B)	(C)			
18	ARWB216BA2	ARWB144BA2	ARWB072BA2		3/8	7/8	3/4			
24	ARWB288BA2	ARWB144BA2	ARWB144BA2		1/2	1-1/8	7/8			
24	ARWB290DA2	ARWB192DA2	ARWB096DA2		3/8	7/8	3/4			
32	ARWB390DA2	ARWB192DA2	ARWB192DA2		1/2	1-1/8	7/8			
Nominal Tons	Combination Model Numbers	Individual Component Numbers			Liquid	Liquid	Low Vapor	Low Vapor	High Vapor	High Vapor
		Master	Slave1	Slave2	(A1)	(A2)	(B1)	(B2)	(C1)	(C2)
30	ARWB360BA2	ARWB144BA2	ARWB144BA2	ARWB072BA2	3/8	3/4	7/8	1-3/8	3/4	1-1/8
36	ARWB432BA2	ARWB144BA2	ARWB144BA2	ARWB144BA2	1/2	3/4	1-1/8	1-5/8	7/8	1-3/8
40	ARWB480DA2	ARWB192DA2	ARWB192DA2	ARWB096DA2	3/8	3/4	7/8	1-3/8	3/4	1-1/8
48	ARWB580DA2	ARWB192DA2	ARWB192DA2	ARWB192DA2	1/2	3/4	1-1/8	1-5/8	7/8	1-3/8

Due to our policy of continuous product innovation, some specifications may change without notification.
©LG Electronics U.S.A., Inc., Englewood Cliffs, NJ. All rights reserved. "LG" is a registered trademark of LG Corp.

REFRIGERANT PIPING INSTALLATION

Y-Branch Pipe Sizing for Heat Pump ARWN Series

When installing one water-source unit as an independent, stand-alone system

For example:

Five indoor units connected

A: Water-source unit
B: First Y-Branch connection
C: Indoor units
D: To indoor units

Water-source unit A to first branch B: Main pipe diameter E

Water-source Unit Capacity (ton)	Liquid pipe (inches)	Vapor pipe (inches)
6	3/8Ø	7/8Ø
8	3/8Ø	7/8Ø
12	1/2Ø	1-1/8Ø
16	1/2Ø	1-1/8Ø

Refrigerant pipe diameter from branch to branch (F,G,H)

Total Capacity of Indoor Units Connected after branch (Btu/h)	Liquid pipe (inches)	Vapor pipe (inches)
≤19,100	1/4Ø	1/2Ø
<54,600	3/8Ø	5/8Ø
≤76,400	3/8Ø	3/4Ø
<112,600	3/8Ø	7/8Ø
<160,400	1/2Ø	1-1/8Ø
<242,300	5/8Ø	1-1/8Ø
<354,900	3/4Ø	1-3/8Ø
≤354,900	3/4Ø	1-5/8Ø

For the first branch pipe B, use the pipe that fits the main pipe diameter E.

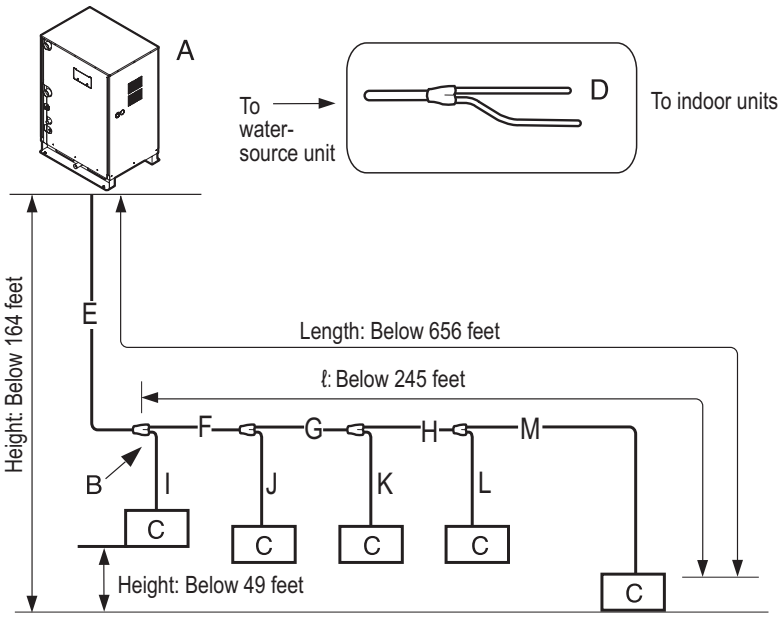

Total pipe length = E + F + G + H + I + J + K + L + M ≤1,640 feet

Length	Longest actual pipe length	Equivalent pipe length
	E + F + G + H + M ≤ 656 feet	E + F + G + H + M ≤ 738 feet
ℓ	Longest pipe length after first branch	
	F + G + H + M ≤ 295 feet	
Height	Elevation differential (Water-source unit ↔ Indoor unit)	
	Height ≤ 164 feet	
height	Elevation differential (Indoor unit ↔ Indoor unit)	
	height ≤ 49 feet	
Distance between fittings and indoor units		≥20 inches
Distance between fittings and Y-Branches		≥20 inches
Distance between two Y-Branches		≥20 inches

⚠ ***Note:*** Piping after the first branch on main pipe E cannot be larger than main pipe diameter E. Always reference the LATS Multi V report.

For example:

When connecting 120% of indoor unit capacity to an 8-ton water-source unit.

1. Water-source unit main pipe diameters: 7/8Ø inch vapor pipe / 3/8Ø inch liquid pipe.
2. Pipe diameters F after first branch should be no larger than 7/8Ø inch vapor pipe / 3/8Ø inch liquid pipe that match main pipe diameter E.
3. When the pipe distance from the water source unit to the farthest indoor unit is ≥295 feet, change the main pipe diameter size according to the water-source unit capacity in the table below. This applies to both liquid and vapor pipes.

Vapor pipe	Liquid pipe
6, 8 ton.....7/8Ø → 1Ø	6, 8 ton.....3/8Ø → 1/2Ø
12, 16 ton .....1-1/8Ø → 1-1/4Ø	12, 16 ton.....1/2Ø → 5/8Ø

Due to our policy of continuous product innovation, some specifications may change without notification.
©LG Electronics U.S.A., Inc., Englewood Cliffs, NJ. All rights reserved. "LG" is a registered trademark of LG Corp.

REFRIGERANT PIPING INSTALLATION

Y-Branch Pipe Sizing for Heat Pump ARWN Series

When installing two water-source units

For example:

Five indoor units connected

A: Water-source units
B: First Y-Branch connection
C: Indoor units
D: To indoor units
E: Connecting branch pipe between the two water-source units: ARCNN21 (Heat Pump ARWN Series)

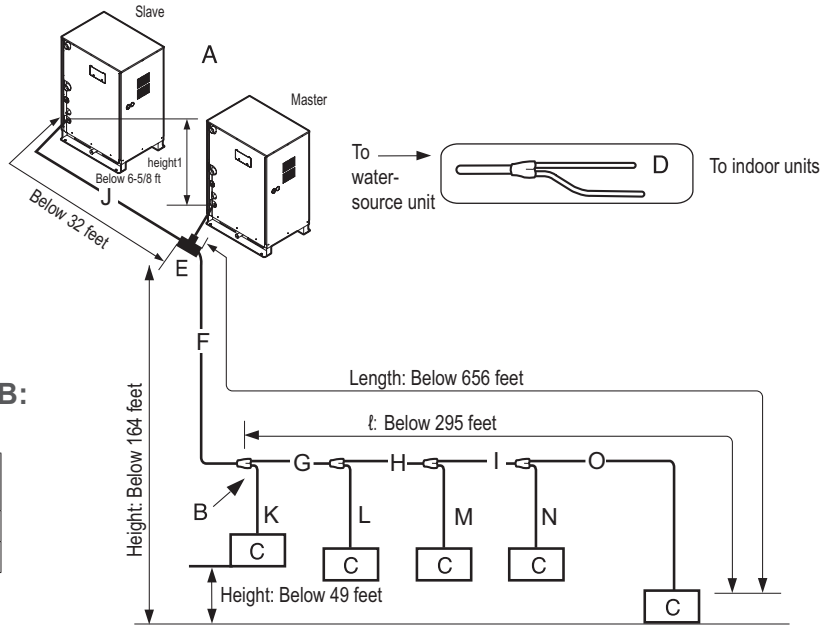

Connecting branch pipe E ~ First branch B: Main pipe diameter F

Water-source Unit Capacity	Liquid pipe (inches)	Vapor pipe (inches)
18 ton (208V), 24 ton (460V)	3/4Ø	1-3/8Ø
24 ton (208V), 32 ton (460V)	3/4Ø	1-5/8Ø

Refrigerant pipe diameter from branch to branch (G, H, I)

Total Capacity of Indoor Units Connected after branch (Btu/h)	Liquid pipe (inches)	Vapor pipe (inches)
≤19,100	1/4Ø	1/2Ø
<54,600	3/8Ø	5/8Ø
≤76,400	3/8Ø	3/4Ø
<112,600	3/8Ø	7/8Ø
<160,400	1/2Ø	1-1/8Ø
<242,300	5/8Ø	1-1/8Ø
<354,900	3/4Ø	1-3/8Ø
≤354,900	3/4Ø	1-5/8Ø

For the first branch pipe B, use the pipe that fits the main pipe diameter F.

Total pipe length = F + G + H + I + K + L + M + N + O ≤1,640 feet

Length	Longest actual pipe length	Equivalent pipe length
	F + G + H + I + O ≤656 feet	F + G + H + I + O ≤738 feet
ℓ	Longest pipe length after first branch	
	G + H + I + O ≤ 295 feet	
Height	Elevation differential (Water-source unit ↔ Indoor unit)	
	Height ≤ 164 feet	
height	Elevation differential (Indoor unit ↔ Indoor unit)	
	height ≤ 49 feet	
height1	Elevation differential (Water-source Unit ↔ Water-source Unit)	
	height1 ≤ 6-5/8 feet	
Distance between fittings and indoor units		≥20 inches
Distance between fittings and Y-Branches		≥20 inches
Distance between two Y-Branches		≥20 inches

⚠ *Note:* Piping after the first branch on main pipe F cannot be larger than main pipe diameter F. Always reference the LATS Multi V report.

For example:

When connecting 120% of indoor unit capacity to an 8-ton water-source unit.

1. Water-source unit main pipe diameters: 7/8Ø inch vapor pipe / 3/8Ø inch liquid pipe.
2. Pipe diameters B after first branch should be no larger than 7/8Ø inch vapor pipe / 3/8Ø inch liquid pipe that match main pipe diameter F.
3. When the pipe distance from the water-source unit to the farthest indoor unit is ≥295 feet, change the main pipe diameter size according to the water source unit capacity in the table below. This applies to both liquid and vapor pipes.

Vapor pipe	Liquid Pipe
18 ton (208V), 24 ton (460V).....1-1/2Ø	*18, 24, 32 ton .....3/4Ø → 7/8Ø*
24 ton (208V), 32 ton (460V).....1-5/8Ø	

Due to our policy of continuous product innovation, some specifications may change without notification.
©LG Electronics U.S.A., Inc., Englewood Cliffs, NJ. All rights reserved. "LG" is a registered trademark of LG Corp.

REFRIGERANT PIPING INSTALLATION

Y-Branch Pipe Sizing for Heat Pump ARWN Series

When installing three water-source units

For example:

Five indoor units connected

A: Water-source units
B: First Y-Branch connection
C: Indoor units
D: To indoor units
E: Connecting branch pipe between water-source units: ARCNN31 (Heat Pump ARWN Series)
F: Connecting branch pipe between water-source units: ARCNN21 (Heat Pump ARWN Series)

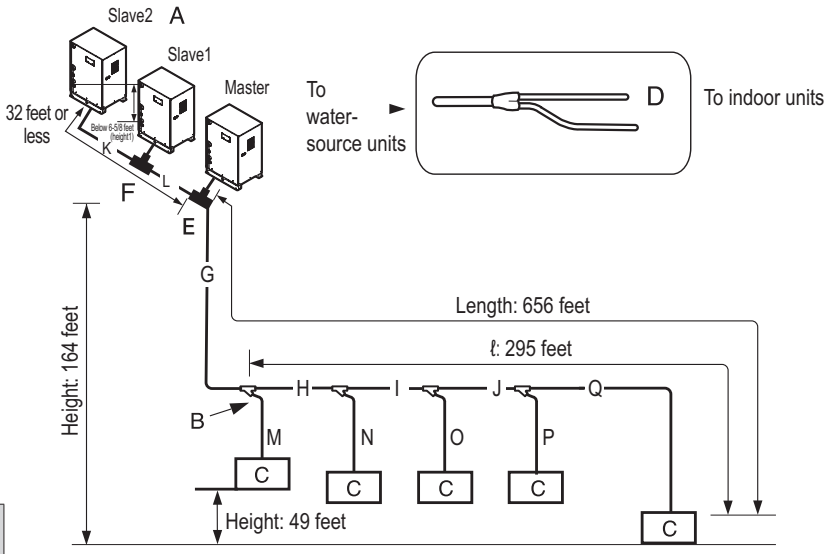

Refrigerant pipe diameter from branch to branch (H, I, J)

Total Capacity of Indoor Units Connected after branch (Btu/h)	Liquid pipe (inches)	Vapor pipe (inches)
≤19,100	1/4Ø	1/2Ø
<54,600	3/8Ø	5/8Ø
≤76,400	3/8Ø	3/4Ø
<112,600	3/8Ø	7/8Ø
<160,400	1/2Ø	1-1/8Ø
<242,300	5/8Ø	1-1/8Ø
<354,900	3/4Ø	1-3/8Ø
≤354,900	3/4Ø	1-5/8Ø

For the first branch pipe B, use the pipe that fits the main pipe diameter G.

⚠ ***Note:***[1,2,3] Piping after the first branch on main pipe G cannot be larger than main pipe diameter G. Always reference the LATS Multi V report.

For example:

When connecting 120% of indoor unit capacity to an 8-ton watersource unit.

1. Water-source unit main pipe diameters: 7/8Ø inch vapor pipe / 3/8Ø inch liquid pipe.
2. Pipe diameters B after first branch should be no larger than 7/8Ø inch vapor pipe / 3/8Ø inch liquid pipe that match main pipe diameter G
3. When the pipe distance from the water-source unit to the farthest indoor unit is ≥295 feet, change the main pipe diameter size according to the water source unit capacity in the table below. This applies to both liquid and vapor pipes.

Connecting branch pipe E ~ First branch B: Main pipe diameter G

Water-source Unit Capacity	Liquid pipe (inches)	Vapor pipe (inches)
30, 36, 40, 48 ton	3/4Ø	1-5/8Ø

Total pipe length = A + B + C + D + G + H + I + J + Q ≤1,640 feet

Length	Longest actual pipe length	Equivalent pipe length
	G + H + I + J + Q ≤ 656 feet	G + H + I + J + Q ≤ 738 feet
ℓ	Longest pipe length after first branch	
	H + I + J + Q ≤ 295 feet	
Height	Elevation differential (Water-source unit ↔ Indoor unit)	
	Height ≤ 164 feet	
height	Elevation differential (Indoor unit ↔ Indoor unit)	
	height ≤ 49 feet	
height1	Elevation differential (Water-source Unit ↔ Water-source Unit)	
	height1 ≤ 6-5/8 feet	
Distance between fittings and indoor units		≥20 inches
Distance between fittings and Y-Branches		≥20 inches
Distance between two Y-Branches		≥20 inches

Vapor pipe	Liquid Pipe
30, 36, 40, 46 ton.....1-5/8Ø	*30, 36, 40, 46 ton .....3/4Ø → 7/8Ø*

Due to our policy of continuous product innovation, some specifications may change without notification.
©LG Electronics U.S.A., Inc., Englewood Cliffs, NJ. All rights reserved. "LG" is a registered trademark of LG Corp.

REFRIGERANT PIPING INSTALLATION

Header Pipe Sizing for Heat Pump ARWN Series

When installing one water-source unit as an independent, stand-alone system

For example:

Six indoor units connected

A: Water-source unit
B: Header branch
C: Indoor units
D: Brazed cap

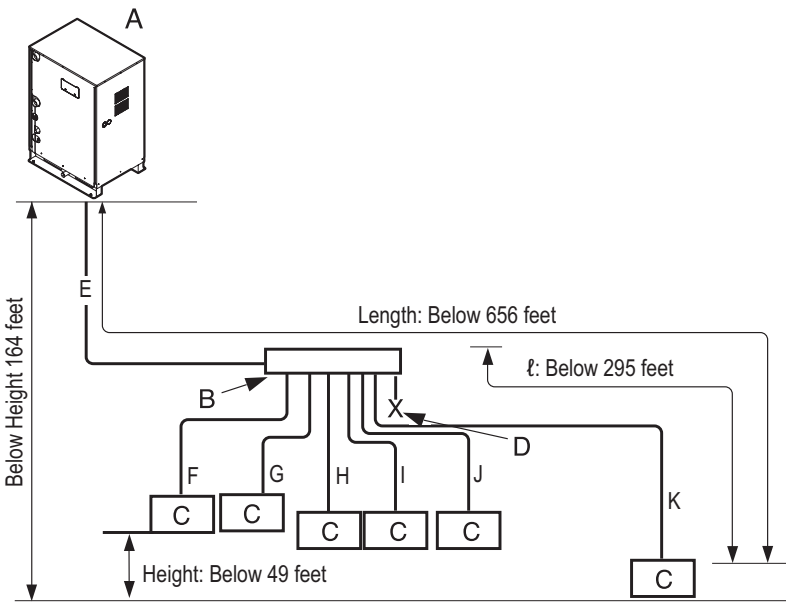

Water-source unit A to Header branch B: Main pipe diameter E

Water-source Unit Capacity (ton)	Liquid pipe (inches)	Vapor pipe (inches)
6	3/8Ø	7/8Ø
8	3/8Ø	7/8Ø
12	1/2Ø	1-1/8Ø
16	1/2Ø	1-1/8Ø

Total pipe length = E + F + G + H + I + J + K ≤1,640 feet

Length	Longest actual pipe length	Equivalent pipe length
	E + K ≤ 656 feet	E + K ≤ 738 feet
ℓ	Longest pipe length after first branch	
	K ≤ 295 feet	
Height	Elevation differential (Water-source unit ↔ Indoor unit)	
	Height ≤ 164 feet	
height	Elevation differential (Indoor unit ↔ Indoor unit)	
	height ≤ 49 feet	
Distance between fittings and indoor units	≥20 inches	

⚠ Note:

- Do not use Headers with Heat-recovery ARWB Series systems.
- Branch pipe cannot be used after Header branch.
- For appropriate pipe length after the Header branch (F~K), install the Header branch so that the pipe distances between the connected indoor units are minimized.
- Large pipe distances can cause different performances in the indoor units.
- Y-Branches and other Header branches cannot be used after the initial Header branch.
- When the pipe distance from the water-source unit to the farthest indoor unit is ≥295 feet, change the main pipe diameter size according to the water-source unit capacity in the table below. This applies to both liquid and vapor pipes.

Vapor pipe	Liquid pipe
6, 8 ton.....7/8Ø → 1Ø	*6, 8 ton.....3/8Ø → 1/2Ø*
12, 16 ton .....1-1/8Ø → 1-1/4Ø	*12, 16 ton.....1/2Ø → 5/8Ø*

Due to our policy of continuous product innovation, some specifications may change without notification.
©LG Electronics U.S.A., Inc., Englewood Cliffs, NJ. All rights reserved. "LG" is a registered trademark of LG Corp.

REFRIGERANT PIPING INSTALLATION

Combination Y-Branch and Header Pipe Sizing for Heat Pump ARWN Series

When installing two water-source units

For example:

Five indoor units connected

A: Water-source units
B: First Y-Branch connection
C: Second Y-Branch connection
D: Indoor units
E: Header branch
F: Brazed cap
G: Connecting branch pipe between water-source units: ARCNN21

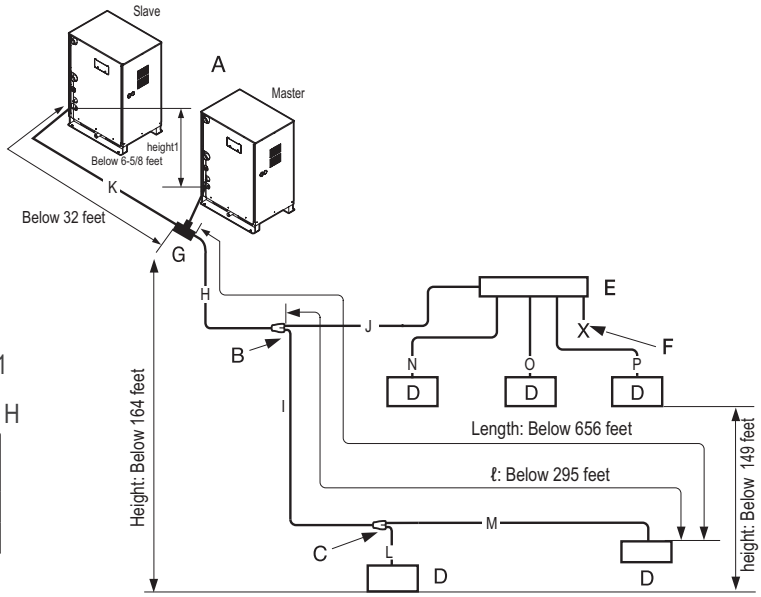

Connecting branch pipe G ~ First Y-Branch B: Main pipe diameter H

Water-source Unit Capacity	Liquid pipe (inches)	Vapor pipe (inches)
18 ton (208V), 24 ton (460V)	3/4Ø	1-3/8Ø
24 ton (208V), 32 ton (460V)	3/4Ø	1-5/8Ø

Refrigerant pipe diameter from branch to branch (B,C)

Total Capacity of Indoor Units Connected after branch (Btu/h)	Liquid Pipe (inches)	Vapor Pipe (inches)
≤19,100	1/4Ø	1/2Ø
<54,600	3/8Ø	5/8Ø
≤76,400	3/8Ø	3/4Ø
<112,600	3/8Ø	7/8Ø
<160,400	1/2Ø	1-1/8Ø
<242,300	5/8Ø	1-1/8Ø
<354,900	3/4Ø	1-3/8Ø
≤354,900	3/4Ø	1-5/8Ø

For the first branch pipe B, use the branch pipe that fits the main pipe diameter H.

⚠ *Note:* Piping after the first branch on main pipe H cannot be larger than main pipe diameter H. Always reference the LATS Multi V report.

Total pipe length = A + B + I + C + L + M + N + J + O + P ≤1,640 feet

Length	Longest actual pipe length	Equivalent pipe length
	H + I + M ≤ 656 feet	H + I + M ≤ 738 feet
ℓ	Longest pipe length after first branch	
	I + M ≤ 295 feet	
Height	Elevation differential (Water-source unit ↔ Indoor unit)	
	Height ≤ 164 feet	
height	Elevation differential (Indoor unit ↔ Indoor unit)	
	height ≤ 49 feet	
height1	Elevation differential (Water-source unit ↔ Water-source unit)	
	height1 ≤ 6-5/8 feet	
Distance between fittings and indoor units		≥20 inches
Distance between fittings and Y-Branches		≥20 inches
Distance between two Y-Branches		≥20 inches

⚠ *Note:*
- Do not use Headers with heat-recovery ARWB series systems.
- Branch pipe cannot be used after Header branch.

For example:
When connecting 120% of indoor unit capacity to an 8-ton water-source unit. Water-source unit main pipe diameters: 7/8Ø inch vapor pipe / 3/8Ø inch liquid pipe.

1. Pipe diameters B after first branch should be no larger than 7/8Ø inch Vapor pipe / 3/8Ø inch Liquid pipe that match main pipe diameter H.
2. When the pipe distance from the water-source unit to the farthest indoor unit is ≥295 feet, change the main pipe diameter size according to the water-source unit capacity in the table below. This applies to both liquid and vapor pipes.
3. For appropriate pipe length after the Header branch (N~P), install the Header branch so that the pipe distances between the connected indoor units are minimized.
4. Large pipe distances can cause the indoor unit performances to be different.
5. Y-Branches and other Header branches cannot be used after the initial Header branch.
6. When the pipe distance from the water-source unit to the farthest indoor unit is ≥295 feet, change the main pipe diameter size according to the water-source unit capacity in the table below. This applies to both liquid and vapor pipes.

Vapor pipe	Liquid Pipe
18 ton (208V), 24 ton (460V).....1-1/2Ø	*18, 24, 32 ton .....3/4Ø → 7/8Ø*
24 ton (208V), 32 ton (460V).....1-5/8Ø	

Conditional Application (if indoor unit D past segment M is farthest indoor unit)
1. When pipe length after first Y-branch is between 131 feet ~295 feet.
2. Diameter of pipe I between first Y-branch and last Y-branch should be increased by one size except if segment I is same size as segment H: 1/4Ø → 3/8Ø → 1/2Ø → 5/8Ø → 3/4Ø → 7/8Ø → 1Ø → 1-1/8Ø → 1-1/4 Ø→ 1-3/8Ø → 1-5/8Ø.
3. Length of pipe from each indoor unit to closest Y-branch or header (L,M,N, O,P) ≤131 feet.
4. [Length of pipe from water source unit to farthest indoor unit (H+I+M)] minus(-) [length of pipe from water source unit to closest indoor unit (H+J+N)]≤131 feet.

System Engineering

Due to our policy of continuous product innovation, some specifications may change without notification.
©LG Electronics U.S.A., Inc., Englewood Cliffs, NJ. All rights reserved. "LG" is a registered trademark of LG Corp.

With four heat-recovery control units

For example:

Three water-source units, four heat recovery control units, and ten indoor units connected

A,B,C: Water-source units
D,E: Y-Branch connections
F,G,H,I: Heat recovery control units
J,K,L,M,N,O,P,Q,R,S: Indoor units
T: Connecting branch pipe between water-source units: ARCNB21
U: Connecting branch pipe between water-source units: ARCNB31
1-19: Pipe lengths

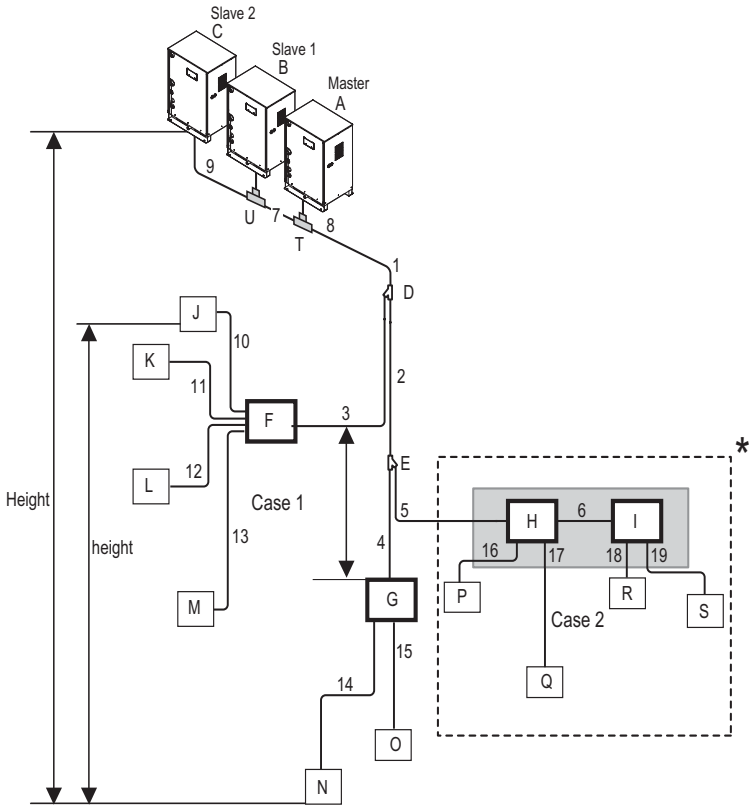

Case 1: Maximum height is 49 feet if installed with a Y-branch.
Case 2: Height is 0 feet in heat recovery control unit series connection.

Water-source unit connection: Refrigerant pipe diameter before first branch (1)

Upstream water-source unit total capacity (ton)	Liquid pipe (inches)	Vapor pipe (inches)	
		Low pressure	High pressure
6, 8	3/8Ø	7/8Ø	3/4Ø
12, 16	1/2Ø	1-1/8Ø	7/8Ø
18 (208V), 24 (460V)	3/4Ø	1-3/8Ø	1-1/8Ø
24 (208V), 30, 32, 36, 40, 48	3/4Ø	1-5/8Ø	1-3/8Ø

⚠ *Note:* [1,2]

Connection piping from branch to branch cannot exceed the main pipe diameter used by the water-source unit. Always reference the LATS Multi V report.

For example:

When connecting indoor units to a 16-ton water-source unit to 130% of its system capacity (248,000 Btu/h), and branching one heat recovery control unit with four 28,000 Btu/h indoor units at the first branch.

1. Water-source unit main pipe diameters (1): 5/8Ø liquid pipe, 1-1/8Ø low-pressure vapor pipe, 7/8Ø high-pressure vapor pipe.
2. Pipe diameters between the first and second branches (228,000 Btu/h indoor unit total capacity) should be no larger than: 5/8Ø liquid pipe, 1-1/8Ø low-pressure vapor pipe, and 7/8Ø high-pressure vapor pipe that match pipe diameters (1).

Refrigerant pipe diameter between branches and heat-recovery control units (2~5)

Downstream indoor unit total capacity (Btu/h)	Liquid pipe (inches)	Vapor pipe (inches)	
		Low pressure	High pressure
≤19,100	1/4Ø	1/2Ø	3/8Ø
<54,600	3/8Ø	5/8Ø	1/2Ø
<76,400	3/8Ø	3/4Ø	5/8Ø
<112,600	3/8Ø	7/8Ø	3/4Ø
<160,400	1/2Ø	1-1/8Ø	7/8Ø
<242,300	5/8Ø	1-1/8Ø	1-1/8Ø
<354,900	3/4Ø	1-3/8Ø	1-1/8Ø
≥354,900	3/4Ø	1-5/8Ø	1-1/8Ø

Indoor unit connecting pipes from branches (10-19)

Indoor unit capacity (Btu/h)	Liquid pipe (inches)	Gas pipe (inches)
≤19,100	1/4Ø	1/2Ø
<54,600	3/8Ø	5/8Ø
<76,400	3/8Ø	3/4Ø
<112,600	3/8Ø	7/8Ø

Due to our policy of continuous product innovation, some specifications may change without notification.
©LG Electronics U.S.A., Inc., Englewood Cliffs, NJ. All rights reserved. "LG" is a registered trademark of LG Corp.

REFRIGERANT PIPING INSTALLATION

Heat Recovery ARWB Series Pipe Sizing

Total pipe length: 1+2+3+4+5+6+G+H+I+J+K+L+M+N+O+P+Q+R+S+10+11+12+13+14+15+16+17+18+19 ≤1,640 feet

T~S	Water-source unit ~ the farthest indoor unit	Equivalent pipe length
	1+2+5+6+19 ≤ 656 feet	1+2+5+6+19 ≤ 738 feet
D~S	First indoor branch ~ the farthest indoor unit	
	2+5+6+19 ≤ 295 feet	
T~C	First water-source unit branch ~ the farthest water-source unit	
	T + 9 ≤ 33 feet	
Height	Elevation differential (water-source unit ↔ indoor unit)	
	Height ≤ 164 feet	
height	Elevation differential (indoor ~ indoor unit)	
	height ≤ 49 feet	
10~19	Piping length from each indoor unit to the closest heat-recovery control unit	
	10 + 11 + 12 + 13 + 14 + 15 + 16 + 17 + 18 + 19 ≤ 131 feet	
Distance between fittings and indoor units	≥20 inches	
Distance between fittings and Y-Branches	≥20 inches	
Distance between two Y-Branches	≥20 inches	
Distance between two series-piped heat-recovery control boxes	≥20 inches	

Note:

- For calculation purposes, assume the equivalent pipe length of a Y-Branch equals 1-5/8 feet.
- Total capacity of indoor units in series connection of heat recovery control units ≤160,000 Btu/h.

Note:

If the equivalent length between the water-source unit and an indoor unit is ≥295 feet, the size of main liquid pipe must increase.

Liquid pipe
6, 8 ton.....3/8Ø↔ 1/2Ø
12, 16 ton.....1/2Ø ↔ 5/8Ø
18,24,30,32,36,40,48.....3/4Ø ↔ 7/8Ø

Conditional Applications (If S is the farthest indoor unit)

Certain conditions must be in place to include pipe lengths between 131 feet ~ 295 feet after first branch.

1. Pipe diameters between first branch and the last branch should be increased, except if pipe diameters 2, 5, 6 match the pipe diameter of main pipe 1.
   1/4Ø → 3/8Ø → 1/2Ø → 5/8Ø → 3/4Ø → 7/8Ø → 1Ø* → 1-1/8Ø → 1-1/4Ø* → 1-3/8Ø → 1-5/8Ø* (*It is not necessary to size up.)
2. When calculating total refrigerant piping length, the lengths for pipes 2, 5, 6 should be doubled.
   1+2(2)+2(5)+2(6)+F+G+10+11+12+13+14+15+16+17+18+19 ≤ 1,640 feet.
3. Pipe length from each indoor unit to the closest heat-recovery control unit (10,11,12,13,14,15,16,17,18,19) ≤ 131 feet.
4. [Pipe length from water-source unit to the farthest indoor unit S (2+5+6+19)] minus (-) [pipe length from water-source unit to the closest indoor unit J (F+10)]≤ 131 feet.

Due to our policy of continuous product innovation, some specifications may change without notification.
©LG Electronics U.S.A., Inc., Englewood Cliffs, NJ. All rights reserved. "LG" is a registered trademark of LG Corp.

SYSTEM REFRIGERANT CHARGE

Calculating Refrigerant Charge

A	Unit charge (lbs)	See Table 63
B	Additional charge (lbs)	
=	Total liquid pipe (ft): Ø7/8 inches	x 0.237 lbs/ft
+	Total liquid pipe (ft): Ø3/4 inches	x 0.178 lbs/ft
+	Total liquid pipe (ft): Ø5/8 inches	x 0.116 lbs/ft
+	Total liquid pipe (ft): Ø1/2 inches	x 0.079 lbs/ft
+	Total liquid pipe (ft): Ø3/8 inches	x 0.041 lbs/ft
+	Total liquid pipe (ft): Ø1/4 inches	x 0.015 lbs/ft
+	Correction Factor (lbs)*	See Table 63
+	HR Units	x 1.1 lbs/ft
	Total amount (lbs)	= A + B

If the calculation results in a negative number, refrigerant does not need to be added.

Example: 8 ton unit

A Water-source unit
B Heat-recovery control unit (HR)
C Indoor unit

D: Ø3/8, 164 feet
E: Ø3/8, 33 feet
F: Ø3/8, 33 feet
G: Ø3/8, 33 feet
H: Ø1/4, 33 feet

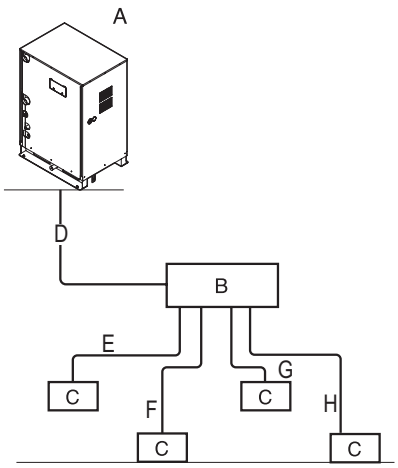

Additional Charge = D x 0.041 + E x 0.041 + F x 0.041 + G x 0.041 + H x 0.015 + HR + CF
= 164 x 0.041 + 33 x 0.041 + 33 x 0.041 + 33 x 0.041 + 33 x 0.015 + 1.1 (HR) + 3.3 (CF)
= 15.7 lbs

Special Condition

If more than 50% of the connected indoor units are chassis types TQ or SE models, and the total number of connected indoor units are more than 50% of the maximum allowable number of connected indoor units, then see the following formula.

Total amount (lbs) = A + B + C

Additional refrigerant charging amount (lbs):

C = (A x α+ B x ß) - (AVG x ß)

A = Total No. of TQ and SE Indoor units, α = 0.5

B = Total No. of indoor units except TQ and SE Indoor units, ß = 0.3

AVG = 50% of maximum allowable number of connected indoor units

Example:

1. Installation information

- Water-source unit: 8 ton
- Total indoor units: six (6) units (TQ: three [3] units, SE: two [2] units, BH: one [1] unit)

2. Information from manufacturer

- Maximum allowable number of connected indoor units: 16
- Calculated additional refrigerant amount = 4.41 lbs: B

3. Indoor refrigerant charge amount

= (5 units x 0.5 + 1 unit x 0.3) - (8 units x 0.3) = 0.88 lbs: C

Revised total additional refrigerant charge = B + C = 4.41 lbs + 0.88 lbs = 5.29 lbs

Due to our policy of continuous product innovation, some specifications may change without notification.
©LG Electronics U.S.A., Inc., Englewood Cliffs, NJ. All rights reserved. "LG" is a registered trademark of LG Corp.

SYSTEM REFRIGERANT CHARGE

Trim Charge Correction Factor

Table 63: Water Source Unit Trim Charge Correction Factor

Heat Recovery / Pump									
Nominal Tons	Combination Model Numbers	Individual Component Numbers			Refrigerant Charge (lbs)				Trim Charge Correction Factor
					Frame 1	Frame 2	Frame 3	Total	
6	ARWB072BA2 / ARWN072BA2				16.1			16.1	3.3
8	ARWB096DA2 / ARWN096DA2				16.1			16.1	3.3
12	ARWB144BA2 / ARWN144BA2				19.4			19.4	6.6
16	ARWB192DA2 / ARWN192DA2				19.4			19.4	6.6
18	ARWB216BA2 / ARWN216BA2	ARWB144BA2 / ARWN144BA2	ARWB072BA2 / ARWN072BA2		19.4	16.1		35.5	9.9
24	ARWB288BA2 / ARWN288BA2	ARWB144BA2 / ARWN144BA2	ARWB144BA2 / ARWN144BA2		19.4	19.4		38.8	13.2
24	ARWB290DA2 / ARWN290DA2	ARWB192DA2 / ARWN192DA2	ARWB096DA2 / ARWN096DA2		19.4	16.1		35.5	9.9
30	ARWB360BA2 / ARWN360BA2	ARWB144BA2 / ARWN144BA2	ARWB144BA2 / ARWN144BA2	ARWB072BA2 / ARWN072BA2	19.4	19.4	16.1	54.9	16.5
32	ARWB390DA2 / ARWN390DA2	ARWB192DA2 / ARWN192DA2	ARWB192DA2 / ARWN192DA2		19.4	19.4		38.8	13.2
36	ARWB432BA2 / ARWN432BA2	ARWB144BA2 / ARWN144BA2	ARWB144BA2 / ARWN144BA2	ARWB144BA2 / ARWB144BA2	19.4	19.4	19.4	58.2	19.8
40	ARWB480DA2 / ARWN480DA2	ARWB192DA2 / ARWN192DA2	ARWB192DA2 / ARWN192DA2	ARWB096DA2 / ARWB096DA2	19.4	19.4	16.1	54.9	16.5
48	ARWB580DA2 / ARWN580DA2	ARWB192DA2 / ARWN192DA2	ARWB192DA2 / ARWN192DA2	ARWB192DA2 / ARWB192DA2	19.4	19.4	19.4	58.2	19.8

Due to our policy of continuous product innovation, some specifications may change without notification.
©LG Electronics U.S.A., Inc., Englewood Cliffs, NJ. All rights reserved. "LG" is a registered trademark of LG Corp.

General:

The Y-Branch and Header kits are used to join one pipe segment to two or more segments. See the Y-Branch and Header Cut-Sheets in the following section for sizes and dimensions.

LG Y-Branch kits consists of:

- Two or three Y-Branches (one liquid line, one or two vapor line)
- Reducer fittings as applicable
- Molded clam-shell type insulation covers

LG Header kits consists of:

- Two Headers (one liquid line, one vapor line)
- Reducer fittings as applicable
- Molded clam-shell type insulation covers

Y-Branch Kits

⚠ ***Note:*** Only LG supplied Y-Branch and Header fittings can be used to join one pipe segment to two or more segments.

LG Y-Branch and Header kits are precision engineered devices designed to evenly divide the flow of refrigerant. Third-party or field fabricated Tee's, Y-fittings, Headers, or other branch fittings are not qualified for use with LG Multi V systems. The only field-provided fittings allowed in a Multi V piping system are 45° and 90° elbows and full-port ball valves.

There is no limitation on the number of Y-Branches that can be installed, but there is a limitation on the number of indoor units connected to a single outdoor unit. See Table 1a on page 17.

Avoid installing Y-Branches backWards as shown in Figure 52. Refrigerant flow cannot make U-turns through Y-Branches.

Figure 52:

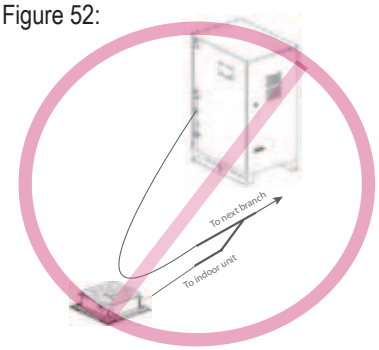

Not Allowed

The pipe coming from the water source unit should always connect to the single port end of the Y-Branch as shown in Figure 53.

Y-Branches may be installed in a horizontal or vertical configuration. When installed in the horizontal configuration, position the fitting so the take-off leg shares the same horizontal plane as the straight-thru leg plus or minus 10° as shown in Figure 54c. When installed in a vertical configuration, position the fitting so the straight-thru leg is plus or minus 3° of plum as shown in Figure 54 (a and b).

The first Y-Branch kit must be located at least three feet from the water source unit. In order to avoid generating refrigerant flow noise into the system, provide a minimum of 20 inches between a branch fitting and any other fitting or indoor unit piped in series.

When a Y-Branch is located in a pipe chase or other concealed space, access doors should be provided for access and inspection.

See "Refrigerant Piping System Insulation" on page 224 for pipe system insulation information.

Y-Branch Insulation

Each Y-Branch kit comes with two clam-shell type peel and stick insulation jackets molded to fit the Y-Branch fittings as shown in Figure 55—one for the liquid line, one for the vapor line.

1. Check the fit of the Y-Branch clam-shell insulation jacket after the Y-Branch is installed.
2. Verify there will be no exposed pipe between the end of the Y-Branch, jacket, and adjacent pipe insulation.
3. Mark the pipe where the insulation jacket ends.
4. Remove the jacket.
5. Install field-provided insulation on the three pipes first.
6. Peel the adhesive glue protector slip and install the clam-shell jacket over the fitting.

Figure 53: Y-Branch Connections

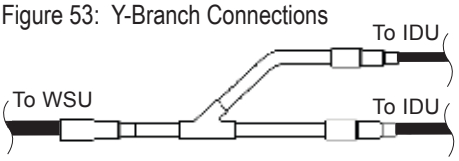

Figure 54: Y-Branch installation alignment specification

a. Vertical Up Configuration

b. Vertical Down Configuration

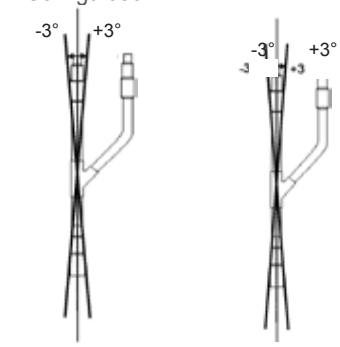

c. Horizontal Configuration End View

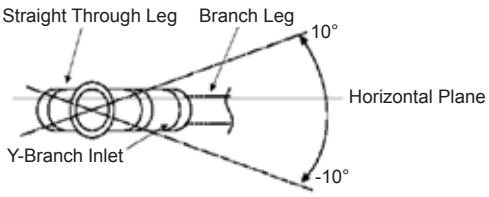

Figure 55: Y-Branch Insulation and Pipe Detail

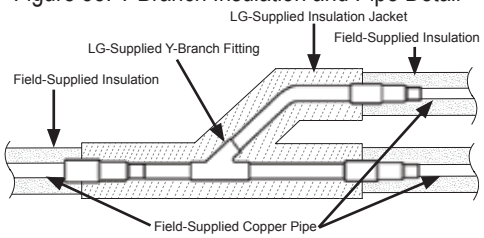

Due to our policy of continuous product innovation, some specifications may change without notification.
©LG Electronics U.S.A., Inc., Englewood Cliffs, NJ. All rights reserved. "LG" is a registered trademark of LG Corp.

Header Kits (Heat Pump Only)

⚠ *Note:* Y-Branches can be installed upstream between the Header and the outdoor unit, but a Y-Branch cannot be installed between a Header and an indoor unit.

To avoid the potential of uneven refrigerant distribution through a Header fitting, minimize the difference in equivalent pipe length between the Header fitting port and each connected indoor unit.

Headers can only be used with the heat pump.

Header kits are intended for use where multiple indoor units are in close proximity to each other or where it would be more economical to "home-run" the run-out pipe segments back to a centralized location. If connecting multiple indoor units that are far apart, Y-Branches may be more economical. See Table 72 and Table 73 in the "Cut-sheet" section for Header kit specifications and capacity.

When connecting indoor units to a Header, it is best practice to connect the unit with the largest nominal capacity to the port closest to the water source unit. Then install the next largest indoor unit to the next port working down to the smallest indoor unit. Avoid skipping ports. See Figure 56.

Install Headers in a horizontal and level position with the distribution ports of the fitting in the same horizontal plane as the straight-thru branch as shown in Figure 57.

All indoor units must be mounted at an elevation below the Header fitting. All indoor units connected to a single Header fitting should be located with an elevation difference between connected indoor units that does not exceed 49 feet. If indoor units are located at an elevation the same as or above the Header fitting, do not use a Header. Instead, install a Y-Branch fitting between the outdoor unit and the Header fitting and connect the elevated indoor unit to the Y-Branch.

Figure 56: Header Kit

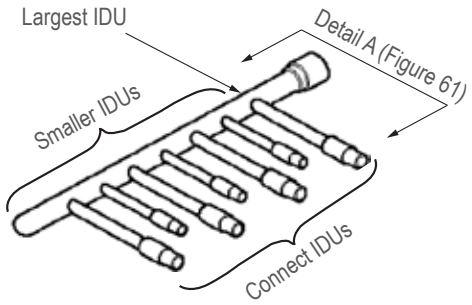

Figure 57: Header Kit—Must be installed level with no rotation

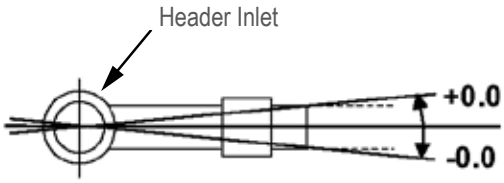

Detail A—Figure 60—Header Fitting Installation End View

Header Insulation

Each Header kit comes with two clam-shell type peel and stick insulation jackets molded to fit each Header fitting—one for the liquid line and one for the vapor line as shown in Figure 58. See "Refrigerant Piping System Insulation" on page 224 for pipe system insulation information.

Figure 58: Header Insulation and Pipe Detail

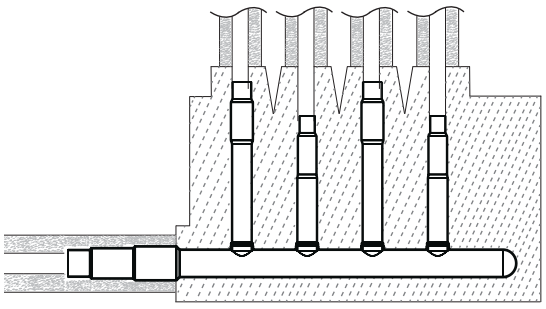

Due to our policy of continuous product innovation, some specifications may change without notification.
©LG Electronics U.S.A., Inc., Englewood Cliffs, NJ. All rights reserved. "LG" is a registered trademark of LG Corp.

Pipe Supports

Pipe supports must be installed outside (around) the primary pipe insulation jacket. Clevis hangers should be used with shields between the hangers and insulation. Fiber straps or split ring hangers can be used as long as they do not compress the pipe insulation. Maximum spacing of pipe supports must meet local codes. If local codes do not specify pipe support spacing, the pipe must be supported a maximum of 5 feet on center for pipe up to ¾ inch size, 6 feet on center for pipe up to 1 inch size, and 8 feet on center for pipe up to 2 inch size. Whenever the pipe changes direction, place a hanger within 12 inches on both sides of the bend or fitting.

Figure 59: Pipe Hanger Details

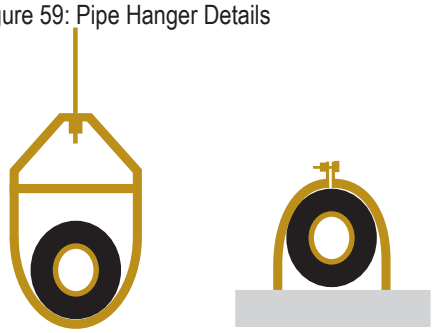

Pipe Sleeves at Penetrations

LG requires all pipe penetrations through walls, floors, and pipes buried underground to be properly insulated and routed through an appropriate wall sleeve of sufficient size to prevent compression of refrigerant pipe insulation and free movement of the pipe within the sleeve. The diameter of penetrations are determined by pipe diameter plus the thickness of installation. Underground refrigerant pipe must be routed inside a protective sleeve to prevent insulation deterioration.

Figure 60: Penetrations

A) Inner Wall (Concealed)

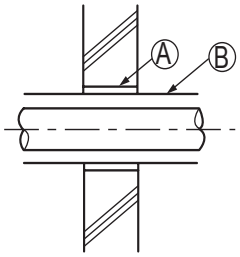

B) Outer Wall

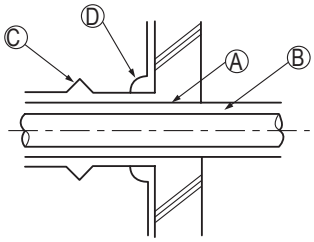

C) Outer Wall (Exposed)

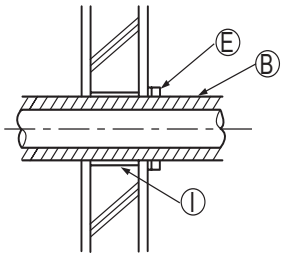

A) Sleeve
B) Insulation
C) Lagging
D) Caulk
E) Band
F) Waterproofing Layer
G) Sleeve with Edge
H) Lagging
I) Mortar or other fire-resistant caulk
J) Fire-resistant insulation

D) Floor (Fireproofing)

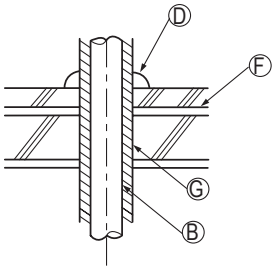

E) Roof pipe shaft

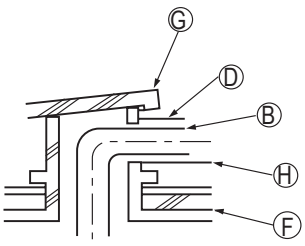

F) Penetration portion on fire limit and boundary wall

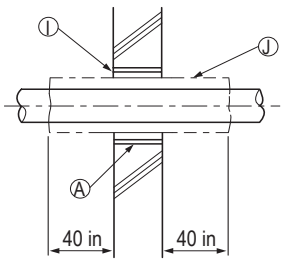

When filling a gap with mortar, cover the penetration part with a steel plate so the insulation material will not cave in. For this part, use incombustible materials for both insulation and covering. (Vinyl covering should not be used.)

Due to our policy of continuous product innovation, some specifications may change without notification.
©LG Electronics U.S.A., Inc., Englewood Cliffs, NJ. All rights reserved. "LG" is a registered trademark of LG Corp.

Installation of Refrigerant Pipe/Brazing Practices

All joints are brazed in the field. Multi V refrigeration system components contain very small capillary tubes, small orifices, electronic expansion valves, and oil separators. Proper system operation depends on the installer using best practices while assembling the piping system. It is imperative to keep the piping system free of contaminants and debris such as copper burrs, slag, or carbon.

- While brazing, use a dry nitrogen purge operating at a minimum pressure of 3 psig.
- Blow clean all pipe sections with dry nitrogen prior to assembly.
- Use a tubing cutter (not a saw) to cut pipe.
- De-burr and clean all cuts before assembly.
- Keep pipe capped and clean, and store pipe stock in a dry place.
- Use adapters to assemble different sizes of pipe.
- Do not use flux or anti-oxidant agents.
- Use a 15% silver phosphorous copper brazing alloy to avoid overheating and produce good flow.
- Use a wet rag located near brazing operations to protect isolation valves, electronic expansion valves, and other control components from excessive heat.

1. Refrigerant Piping
2. Pipe to be brazed
3. Nitrogen
4. Taping
5. Valve
6. Pressure-reducing valve

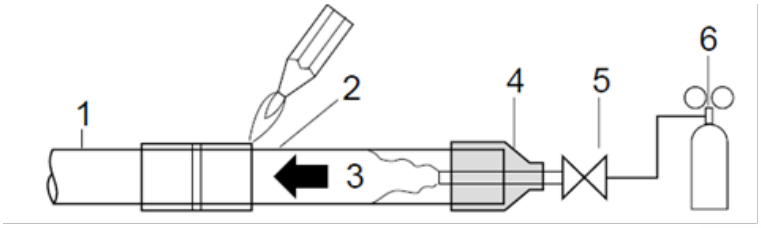

Unit Connections

⚠ ***Important:*** Verify that field tubing is correctly routed inside the unit casing so that it does not touch the compressor casing, terminal cover, or mounting bolts.

Properly insulate the liquid and gas lines up to the point of connection inside the confines of the unit casing.

Component Model No.	Liquid Line (in)	Low Pressure (in)	High Pressure (in)
ARWB096DA2	⅜ Flare	⅞ Braze	¾ Flare
ARWB192DA2	½ Flare	1-1/8 Braze	⅞ Braze
ARWB072BA2	⅜ Flare	⅞ Braze	¾ Flare
ARWB144BA2	½ Flare	1-1/8 Braze	⅞ Braze
ARWN096DA2	⅜ Flare	⅞ Braze	Common Pipe
ARWN192DA2	½ Flare	1-1/8 Braze	Common Pipe
ARWN072BA2	⅜ Flare	⅞ Braze	Common Pipe
ARWN144BA2	½ Flare	1-1/8 Braze	Common Pipe



Due to our policy of continuous product innovation, some specifications may change without notification.
©LG Electronics U.S.A., Inc., Englewood Cliffs, NJ. All rights reserved. "LG" is a registered trademark of LG Corp.

Refrigerant Piping System Insulation

The liquid and vapor lines must be insulated separately. All refrigerant piping, including Y-Branch and Header fittings, field-provided isolation ball valves, service valves, elbows, and other specialties must be thoroughly insulated using a closed-cell insulation, such as Armaflex or equivalent. All joints must be glued with no air gaps. Insulation material must fit snugly against the refrigeration pipe with no air space between the pipe and insulation material. Insulation passing through pipe hangers, inside conduit and/or wall sleeves should not be compressed. Protect insulation inside hangers and supports with a second layer of insulation.

The design engineer should perform calculations to determine if the factory-supplied insulation jackets have sufficient thickness to meet local codes and avoid sweating at jobsite conditions. Technical data on factory insulation can be found in the Cut Sheet section starting on page 258—"Y-Branch Kits (Heat Recovery/Heat Pump)" and "Header Kits (Heat Pump)."

Add additional insulation if necessary

1. Check the fit of the insulation jacket provided with the LG Y-Branch and Header kits after all pipes are brazed to fittings.
2. Mark all pipes at the point where the insulation jacket ends.
3. Remove the jacket.
4. Install field-provided insulation on pipes segments.
5. Install the LG provided insulation plugs on the ends of all unused Header ports.
6. Apply clamshell insulation on jackets to Y-Branches and Header fittings.
7. Peel the adhesive glue protector strips from the insulation jacket and install the clam-shell jacket over the fitting.

Due to our policy of continuous product innovation, some specifications may change without notification.
©LG Electronics U.S.A., Inc., Englewood Cliffs, NJ. All rights reserved. "LG" is a registered trademark of LG Corp.

Figure 61: One Water-source Unit, ARWN Series Heat Pump Systems — 3Ø, 208/230V and 3Ø, 460V

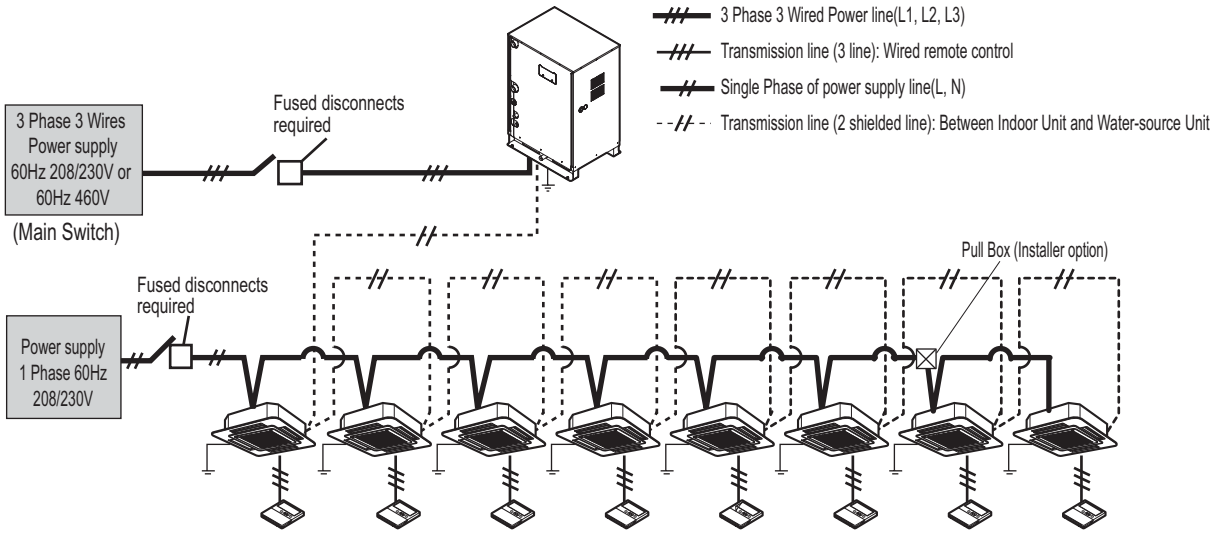

⚠ WARNING

- *Indoor unit ground wiring is required to prevent accidental electrical shock.*
- *Install a main shutoff switch that interrupts all power sources simultaneously.*
- *If there is a possibility of reversed phase, phase loss, momentary blackout, or the power goes on and off while the system is operating, install a field-supplied phase loss protection circuit.*

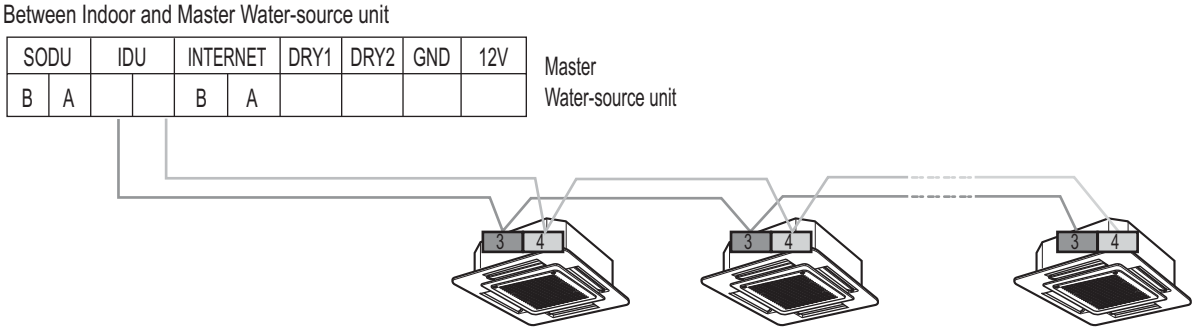

The GND terminal is a '–' terminal for the central controller, not a ground line.

Due to our policy of continuous product innovation, some specifications may change without notification.
©LG Electronics U.S.A., Inc., Englewood Cliffs, NJ. All rights reserved. "LG" is a registered trademark of LG Corp.

Figure 62: Two Water-source Units, ARWN Series Heat Pump Systems — 3Ø, 208/230V and 3Ø, 460V

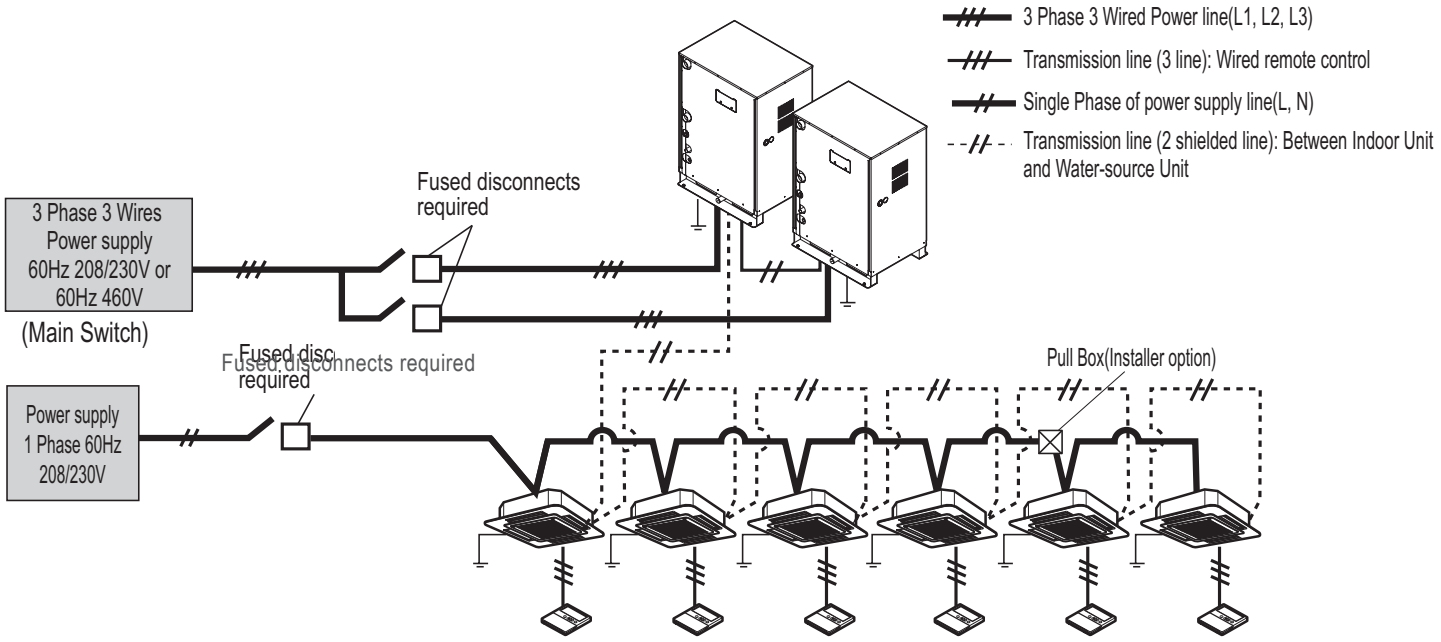

⚠ WARNING

- Indoor unit ground wiring is required to prevent accidental electrical shock.
- Install a main shutoff switch that interrupts all power sources simultaneously.
- If there is a possibility of reversed phase, phase loss, momentary blackout, or the power goes on and off while the system is operating, install a field-supplied phase loss protection circuit.

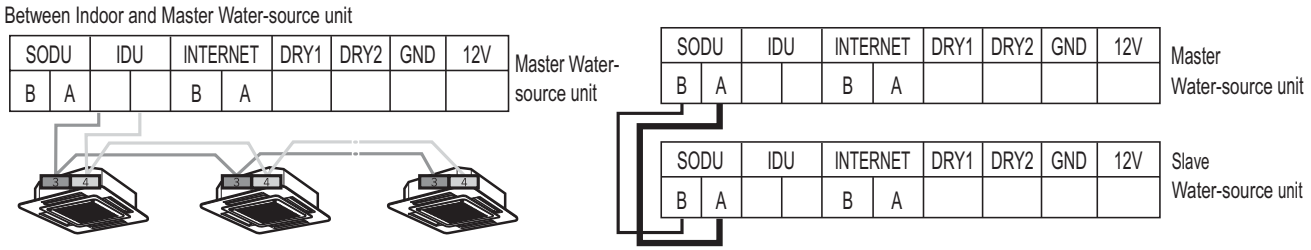

The GND terminal is a '–' terminal for the central controller, not a ground line

• Make sure that terminal number of master and slave water-source unit are matched. (A-A,B-B)

Due to our policy of continuous product innovation, some specifications may change without notification.
©LG Electronics U.S.A., Inc., Englewood Cliffs, NJ. All rights reserved. "LG" is a registered trademark of LG Corp.

Figure 63: Three Water-source Units, ARWN Series Heat Pump Systems — 3Ø, 208/230V and 3Ø, 460V

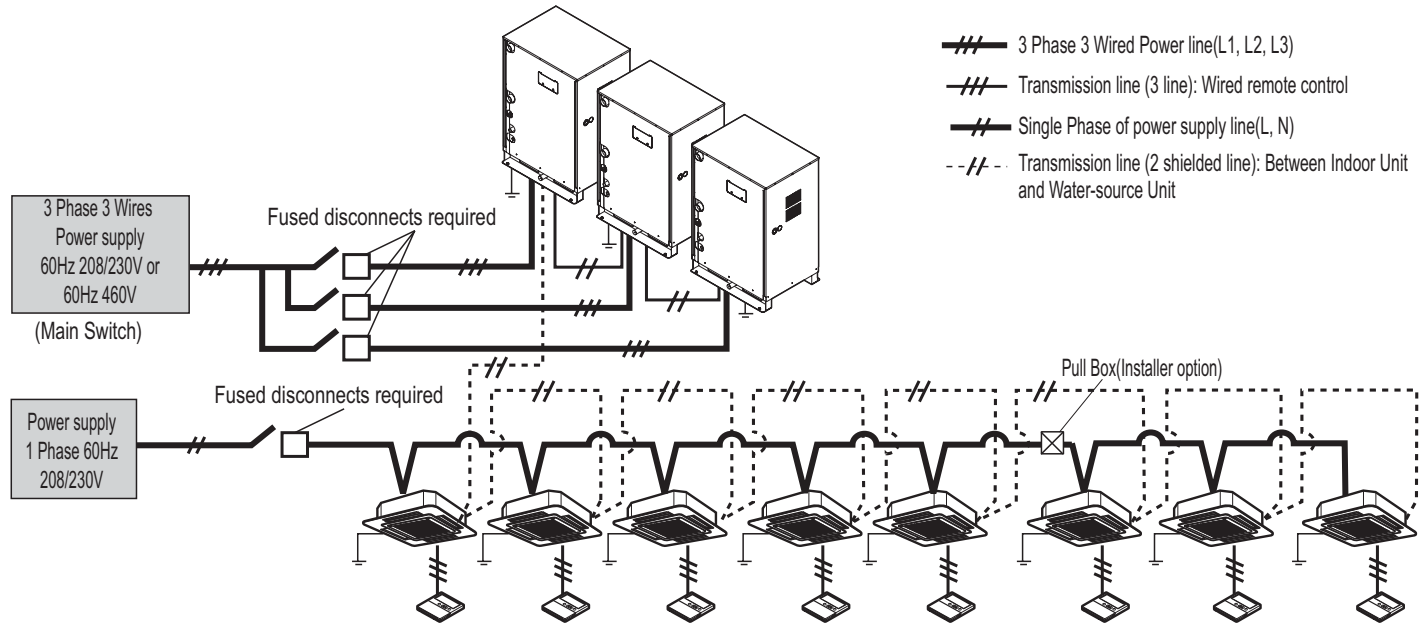

⚠ WARNING

- Indoor unit ground wiring is required to prevent accidental electrical shock.
- Install a main shutoff switch that interrupts all power sources simultaneously.
- If there is a possibility of reversed phase, phase loss, momentary blackout, or the power goes on and off while the system is operating, install a field-supplied phase loss protection circuit.

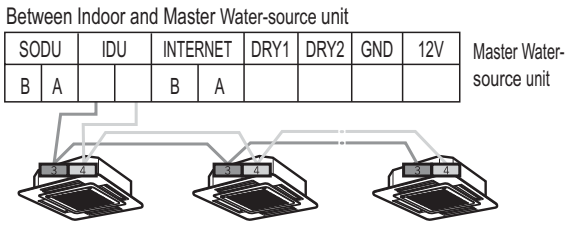

The GND terminal is a '–' terminal for the central controller, not a ground line.

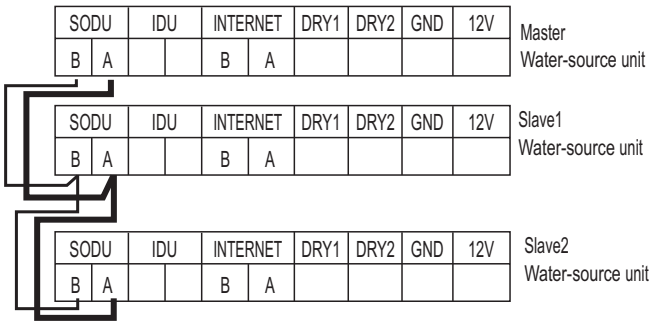

Due to our policy of continuous product innovation, some specifications may change without notification.
©LG Electronics U.S.A., Inc., Englewood Cliffs, NJ. All rights reserved. "LG" is a registered trademark of LG Corp.

Power and Control Wiring Diagrams for Single, Dual, and Triple Chassis Units

Figure 64: When the power source is supplied to a single unit

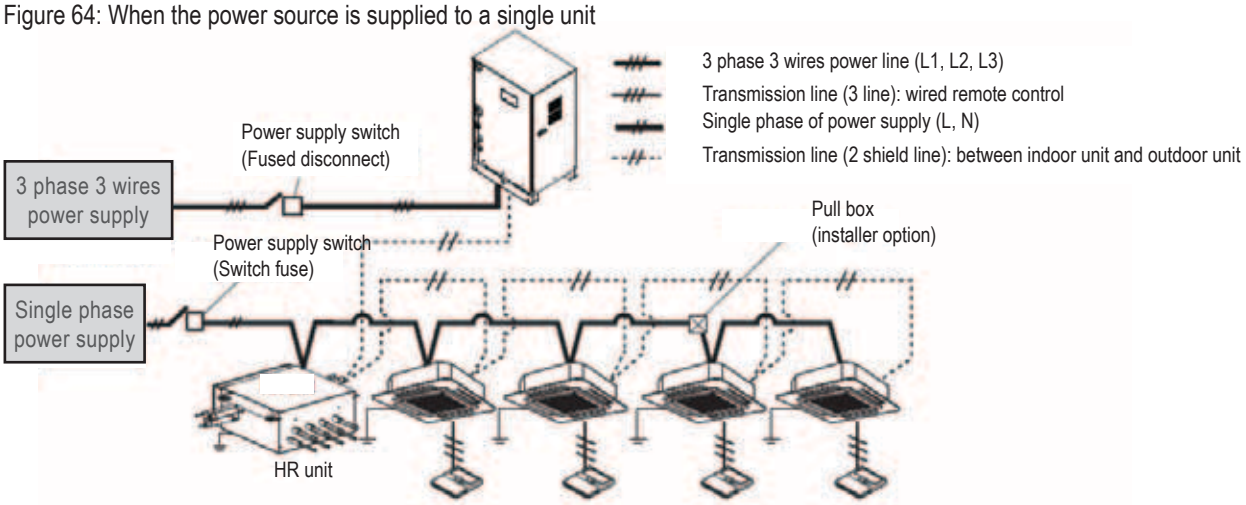

Figure 65: When the power source is supplied to each water source unit individually (2 units)

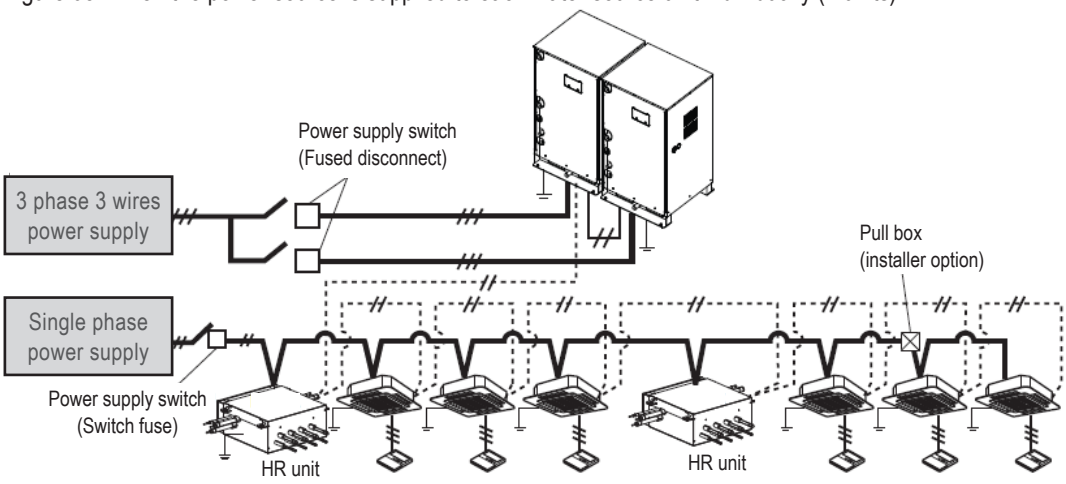

Figure 66: When the power source is supplied to each water source unit individually (3 units)

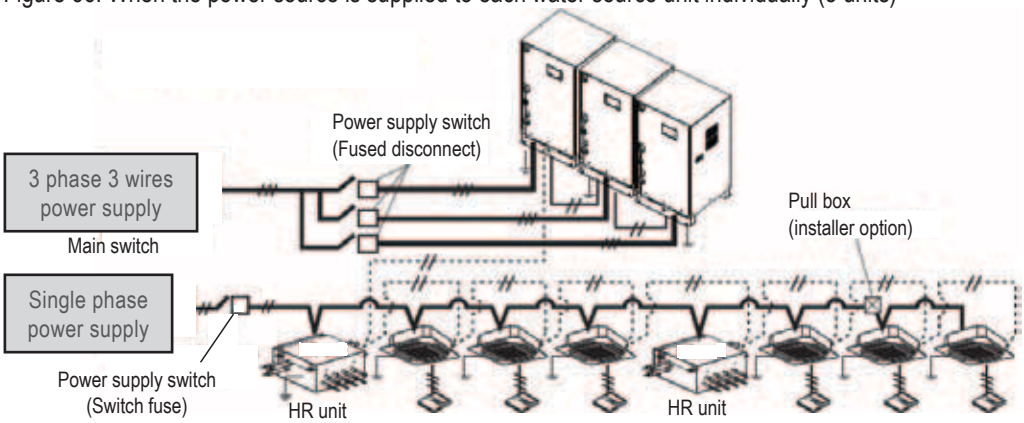

⚠ Note:
- Communication and power lines must not be combined in same conduit.
- Never install a phase leading capacitor.
- Phase imbalance must be no greater than 2%. Phase imbalance greater than 2% may reduce equipment lifespan.
- Improper grounding may cause electric shock.

Due to our policy of continuous product innovation, some specifications may change without notification.
©LG Electronics U.S.A., Inc., Englewood Cliffs, NJ. All rights reserved. "LG" is a registered trademark of LG Corp.

Alternate Power Wiring Diagrams for Double and Triple Chassis Units

Figure 67: Double Chassis Configuration

Note: All wiring is field engineered per local code.

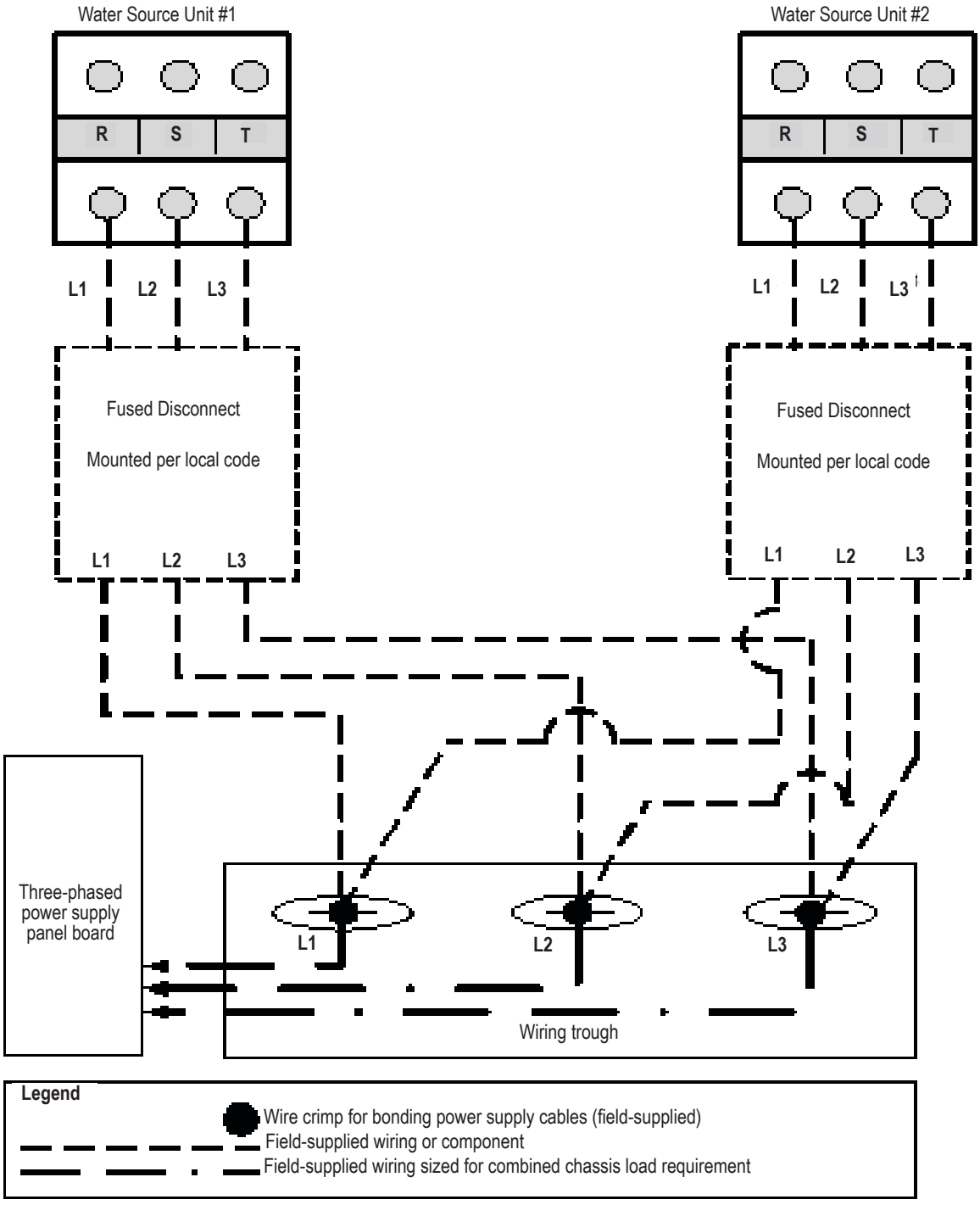

Note: The electrical system designer and/or installer are entirely responsible for the engineering and installation of all field-provided wiring and must rely on equipment nameplate specification and information guided by both NEC and local electrical codes as their sole source to engineer such systems.

Due to our policy of continuous product innovation, some specifications may change without notification.
©LG Electronics U.S.A., Inc., Englewood Cliffs, NJ. All rights reserved. "LG" is a registered trademark of LG Corp.

Figure 68: Triple Chassis Configuration

⚠ ***Note:*** All wiring is field engineered per local code.

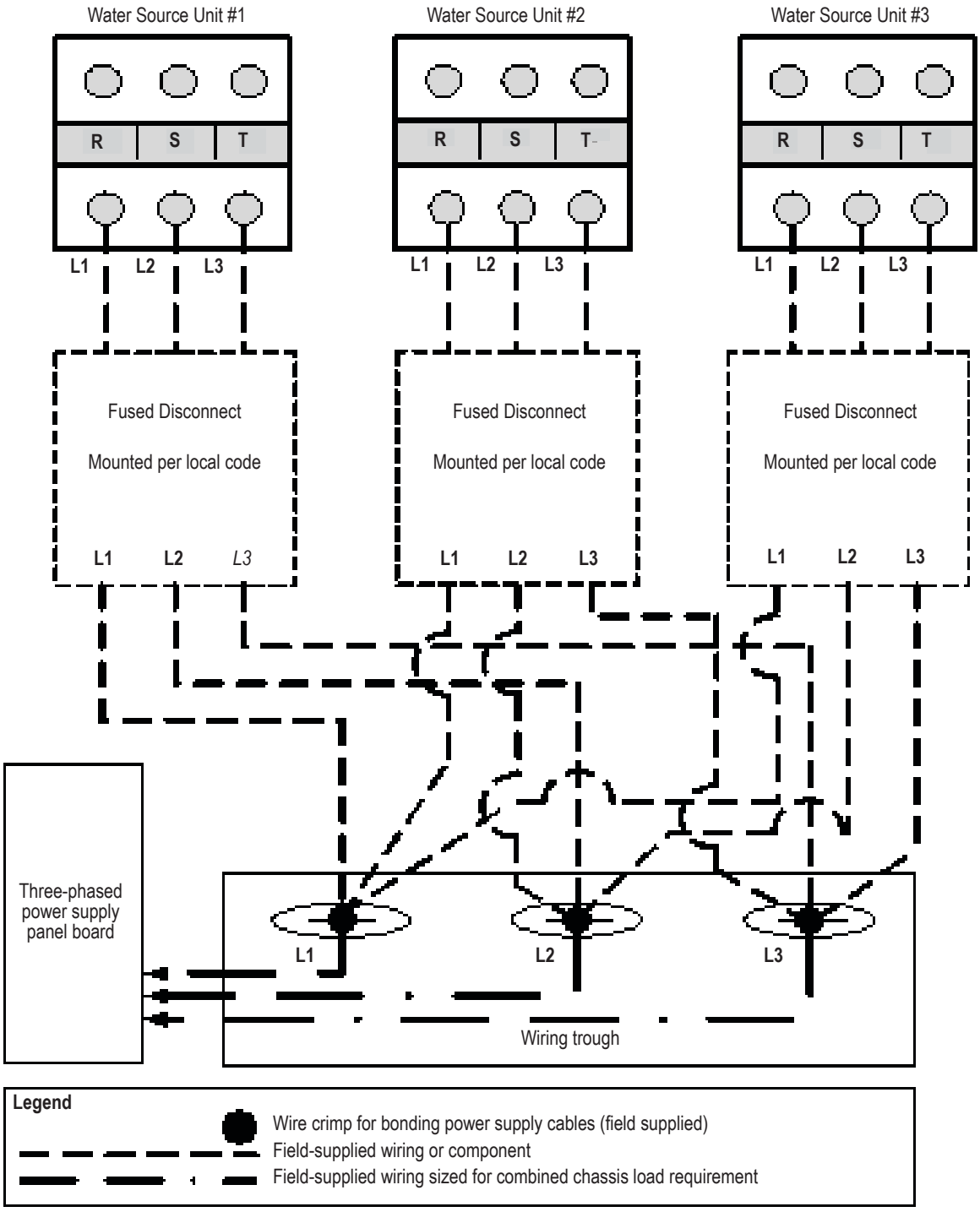

Disclaimer: *The electrical system designer and/or installer are entirely responsible for the engineering and installation of all field-provided wiring and must rely on equipment nameplate specification and information guided by both NEC and local electrical codes as their sole source to engineer such systems.*

Due to our policy of continuous product innovation, some specifications may change without notification.
©LG Electronics U.S.A., Inc., Englewood Cliffs, NJ. All rights reserved. "LG" is a registered trademark of LG Corp.

JOBSITE CONNECTIONS

Power Control Wiring

Low Voltage Wiring

- For indoor unit low voltage (communication cable), use 2 conductor, stranded and shielded wire grounded at the water source unit.
- Connect communications cable between indoor units using a daisy chain configuration only. Use of STAR or HOME RUN control wiring is not permitted.

BUS Type—Preferred

Connection of the communication cable must be installed as shown in the figure below between indoor unit to outdoor unit.

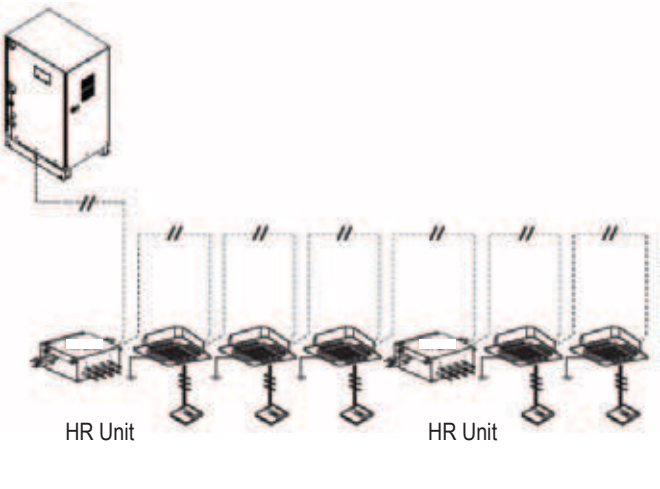

STAR Type—Not Allowed

Abnormal operation can be caused by communication defect when connection of the communication cable is installed like the figure below (STAR type).

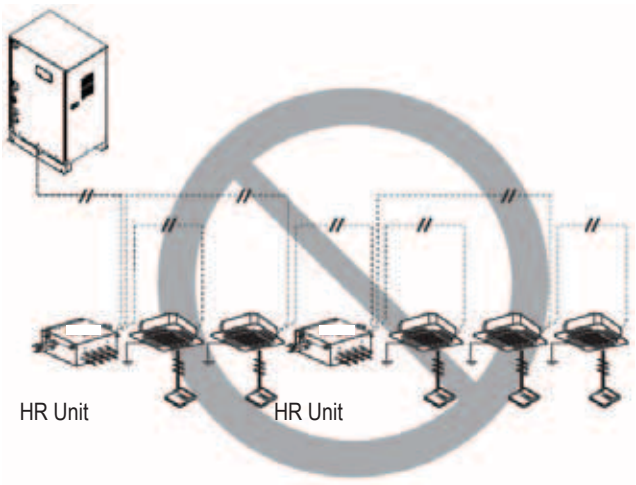

⚠ ***Note:***
- Stranded and shielded communication cable shall be a minimum of 18 AWG or sized per local code (whichever is greater).
- Do not route control wiring and power wiring in the same conduit.
- Power and communication cables must be routed in a manner that keeps them a minimum of two inches apart. The maximum allowable length of the indoor unit communication cable is 3280 feet.

Due to our policy of continuous product innovation, some specifications may change without notification.
©LG Electronics U.S.A., Inc., Englewood Cliffs, NJ. All rights reserved. "LG" is a registered trademark of LG Corp.

Flow Switch and Solenoid Valve Wiring

The following are suggested details for wiring in a flow switch and for solenoid valves (optional) to turn ON/OFF water flow to the unit.

Figure 69: Central Control (Use DDC Port)

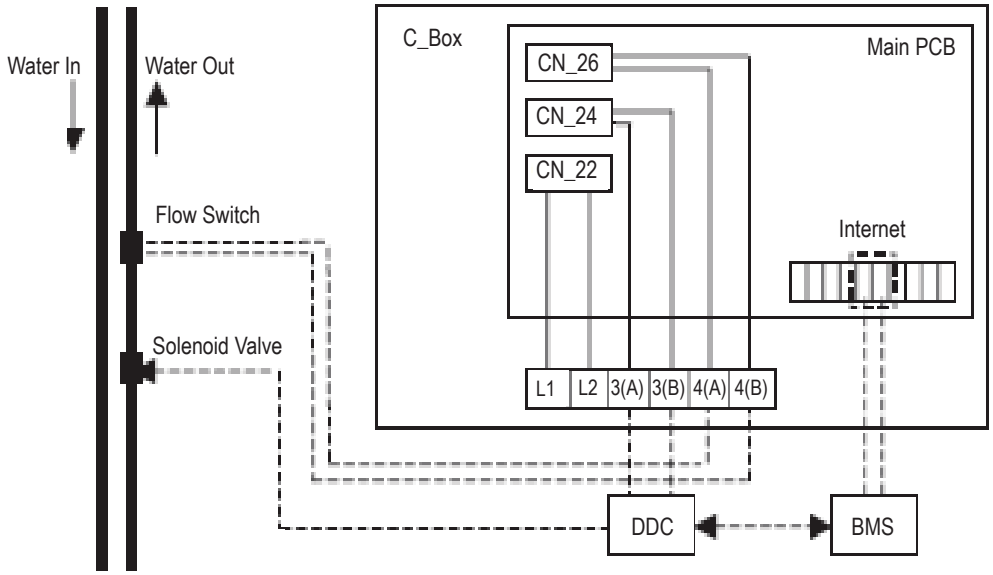

Figure 70: Individual Control (Use 208/230V Out Port)

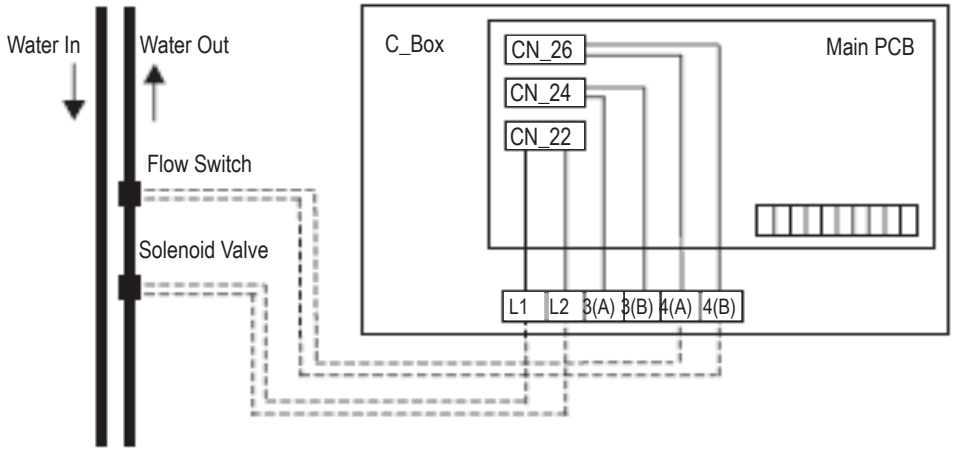

Set the dip switch (refer to the figure below) and reset the power when you need individual control for the water solenoid valve.

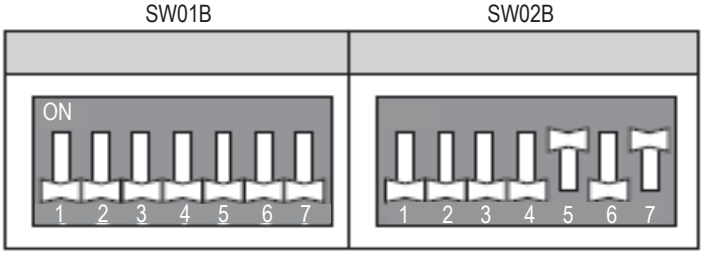

Due to our policy of continuous product innovation, some specifications may change without notification.
©LG Electronics U.S.A., Inc., Englewood Cliffs, NJ. All rights reserved. "LG" is a registered trademark of LG Corp.

WATER LOOP CIRCUIT DESIGN

“Water Design Guide” on page 235
“Variable Water Flow Control Kit” on page 240

Design Steps

The Multi V Water II will require a water cooling/heating source. This year-round heating and cooling system utilizes a two-pipe closed-loop water circuit, which circulates water continuously and maintains water temperature between 50°F and 113°F in Cooling mode and between 23°F and 113°F in Heating mode. See “Performance Data” capacity tables starting on page 40 for performance at different entering water temperatures. At the high end of this temperature range, a heat rejecter (cooling tower, dry cooler, geothermal well) removes the heat, while at the low end of the temperature range, an auxiliary heat source (boiler, solar panel, geothermal well) adds heat.

Piping, pumps, and accessories must be sized to provide adequate water flow to the water source unit.

Design Schematic

The Multi V water source units have factory-installed, stainless-steel plate heat exchangers. In order to protect these heat exchangers, it is recommended to use closed cooling towers. If open cooling towers or other open loop systems are used, an intermediate heat exchanger should be added to protect the water source unit from contaminants and debris in the water system that may foul or clog the heat exchanger. Open loop systems without an intermediate heat exchanger are not recommended due to risk of freezing, reduction of flow due to scaling or clogging, or other potential problems caused by improper water quality.

Figure 71: Cooling Cycle Diagram

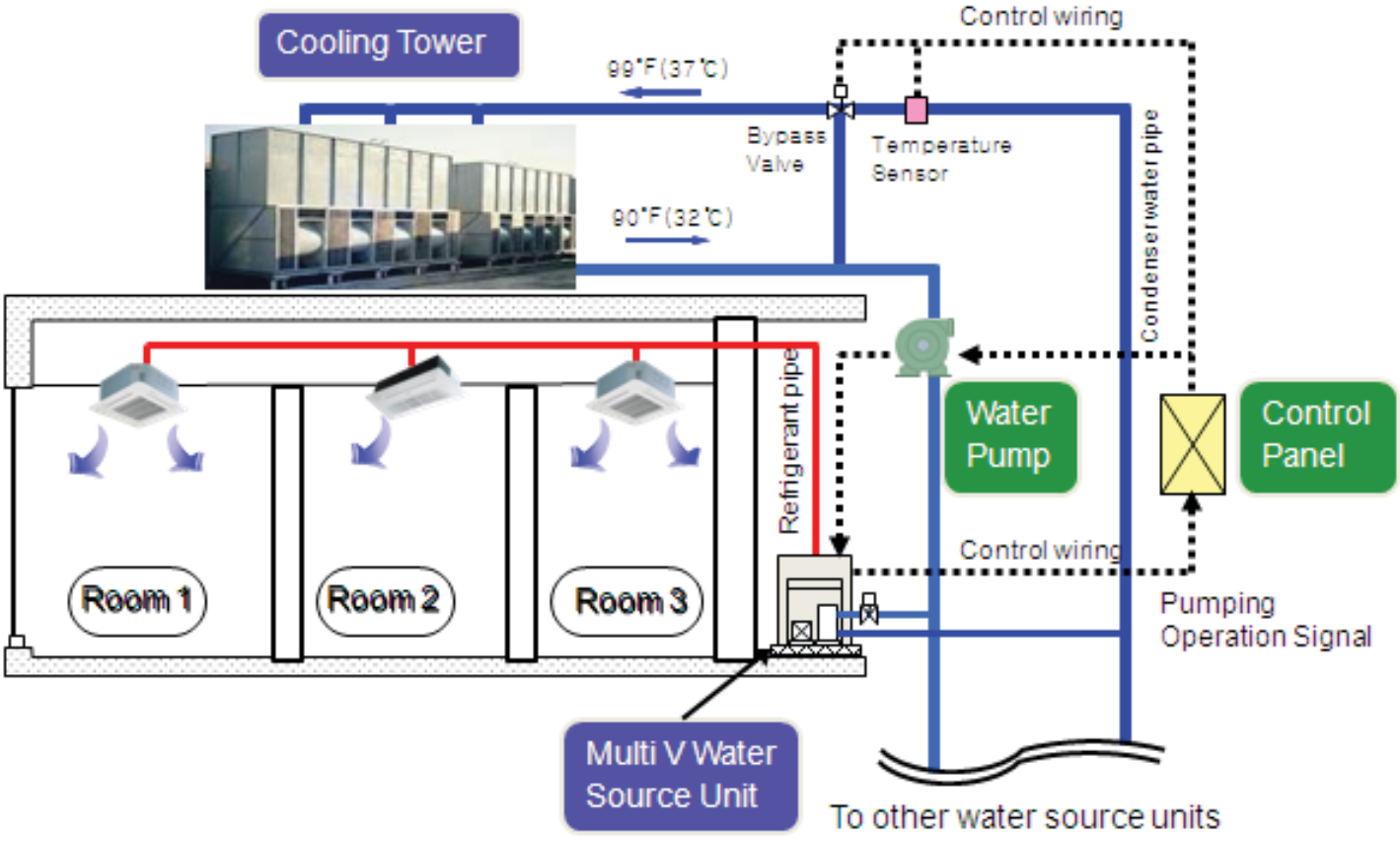

Due to our policy of continuous product innovation, some specifications may change without notification.
©LG Electronics U.S.A., Inc., Englewood Cliffs, NJ. All rights reserved. “LG” is a registered trademark of LG Corp.

Figure 72: Heating Cycle Diagram

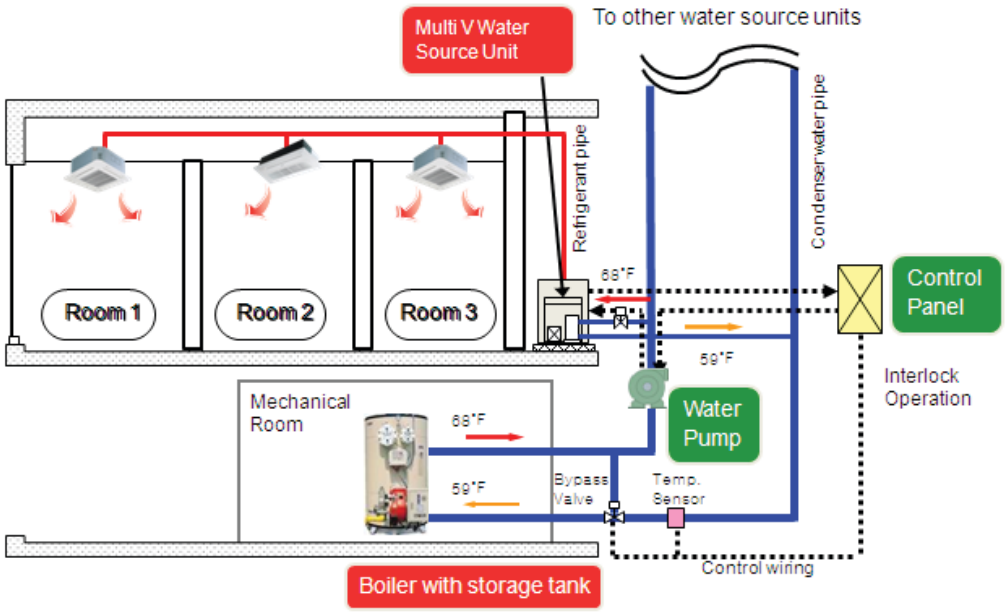

Expansion Tank

All closed loop systems should have a bladder type expansion tank installed. The expansion tank will protect the equipment from excess pressures due to expansion of water in the loop.

Heat Source and Storage Tank

There are several sources for heat that can be used for this system. They include the following:

- Electric boiler
- Gas boiler
- Solar heat with storage tanks
- Geothermal fields
- Steam heat from remote central plant

In order to deal with thermal flux of the system, if floor space is allowed, a heat storage tank can be installed. The heat storage tank can store surplus heat or store heat during the night when electric rates are lower. Closed type storage tanks are recommended to prevent contamination of the water system.

Piping System

As shown on the pipe connection detail in Figure 73, the following components should be installed at each Multi V water source unit:

- Strainer with a minimum 50 mesh screen at the inlet, which should be cleaned regularly to prevent water flow blockage.
- Pressure gauges at the inlet and outlet.
- Thermometers at the inlet and outlet.
- Flexible connectors at the inlet and outlet.
- A flow switch should be installed at the outlet in the horizontal pipe. The flow switch should be wired to communication terminals and should be set to shut the unit off if flow falls below 50% of the unit design flow. Must use a normally closed type flow switch. The flow switch must be installed within five pipe diameters downstream and three pipe diameters upstream of elbows, valves, and reductions, which can lead to turbulence.
- Shutoff valves must be installed at the inlet and outlet to permit service of the unit.
- Service ports with hose connections must be installed at the inlet and outlet. These service ports are used to flush the water source unit separately from the loop system.
- A circuit setter or balancing valve is suggested to be installed to verify proper water flow to each water source unit.
- Inhibitors should be used in the water loop, especially if the water temperature operates above 104°F.
- Maintain water quality requirements as shown on page 238.

Due to our policy of continuous product innovation, some specifications may change without notification.
©LG Electronics U.S.A., Inc., Englewood Cliffs, NJ. All rights reserved. "LG" is a registered trademark of LG Corp.

Figure 73: Typical Connections at Water Source Unit

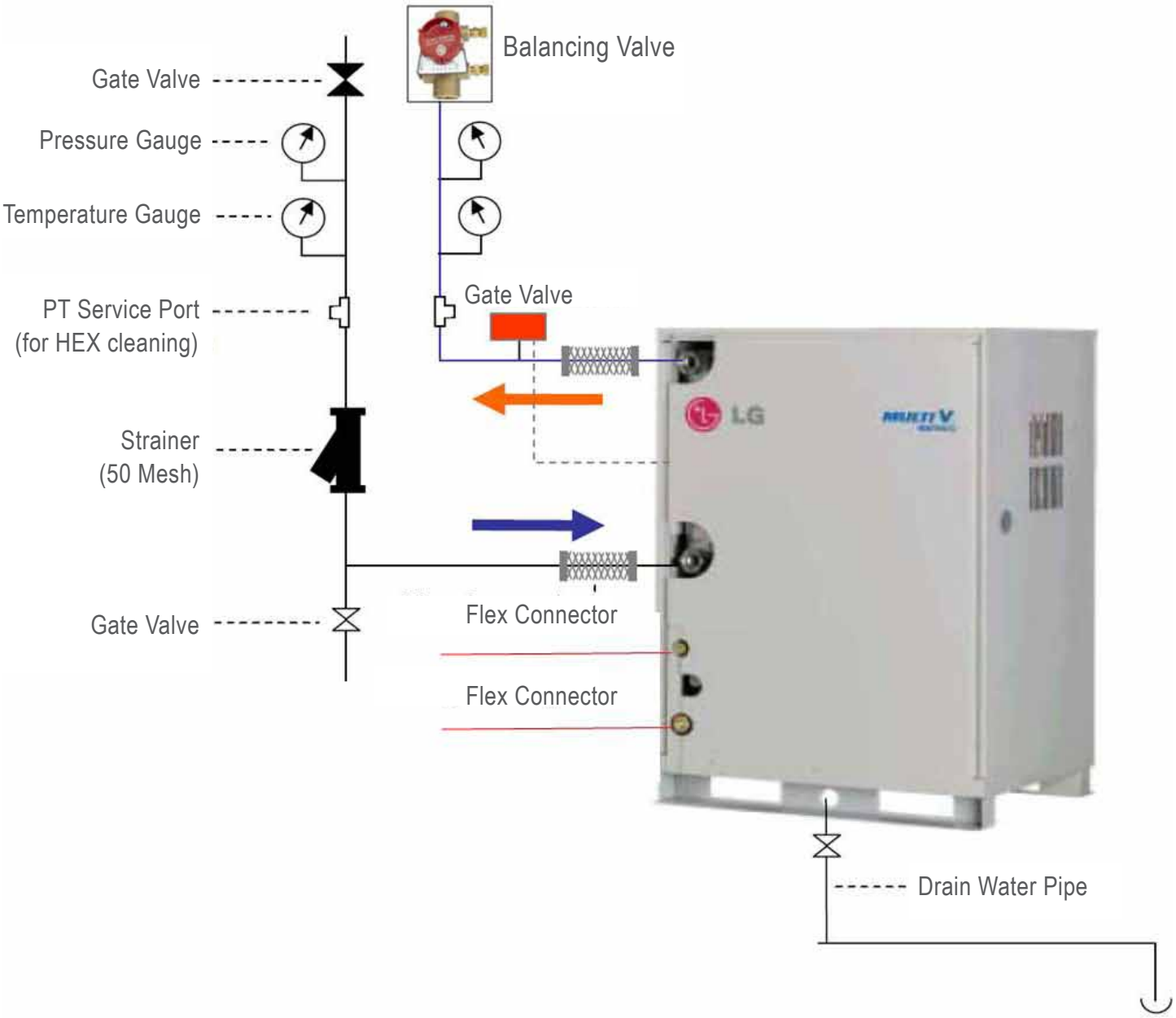

Due to our policy of continuous product innovation, some specifications may change without notification.
©LG Electronics U.S.A., Inc., Englewood Cliffs, NJ. All rights reserved. "LG" is a registered trademark of LG Corp.

Freeze Protection

The piping system must be protected from freezing during winter conditions. Heating mode of the water source unit will reduce water loop temperature. The addition of antifreeze may lower the performance of the water source unit due to reduced heat transfer and added pressure drop. Use the following process to prevent freezing of the loop water.

1. Find the corresponding correction factor from Table 64.
2. Multiply the correction factor by the water source unit capacity to find the *NET* water source unit capacity.
3. Apply the corresponding *pressure drop* correction factor from Table 64 and multiply by the water source unit pressure drop to find the *NET* water source unit pressure drop.

Table 64: Antifreeze Corrections

Antifreeze Type	Item	Antifreeze % by weight				
		10%	20%	30%	40%	50%
Methanol	Cooling	0.998	0.997	0.995	0.993	0.992
	Heating	0.995	0.99	0.985	0.979	0.974
	Pressure Drop	1.023	1.067	1.091	1.122	1.160
Ethylenel Glycol	Cooling	0.996	0.991	0.987	0.983	0.979
	Heating	0.993	0.985	0.997	0.969	0.961
	Pressure Drop	1.024	1.068	1.124	1.188	1.263
Propylene Glycol	Cooling	0.993	0.987	0.98	0.974	0.968
	Heating	0.986	0.973	0.96	0.948	0.935
	Pressure Drop	1.040	1.098	1.174	1.273	1.405

Glycol corrections must be calculated manually. LATS program does not calculate glycol corrections.

Water Quality Requirements

Impurities in the water can influence the performance and life expectancy of the water source unit. The water should be tested and treated using a local water treatment professional. The following levels should be maintained:

Table 65: Water Test Levels

Items	Closed Type System		Effect	
	Circulating Water	Supplemented Water	Corrosion	Scale
Basic Item				
pH [77° F]	7.0 ~ 8.0	7.0 ~ 8.0	x	x
Conductivity [77° F] mS/m	Below 30	Below 30	x	x
Chlorine ions (mg CL^-/L)	Below 50	Below 50	x	
Sulfate ions (mg SO_4^{2}/L)	Below 50	Below 50	x	x
Acid consumption (pH4.8) (mg$CaCO_3$/L)	Below 50	Below 50		x
Total Hardness (mg $CaCO_3$/L)	Below 70	Below 70		x
Calcium Hardness (mg $CaCO_3$/L)	Below 50	Below 50		x
Ionic-static silica (mg SiO_2/L)	Below 30	Below 30		x
Reference Item				
Iron (mg Fe/L)	Below 1.0	Below 0.3	x	x
Copper (mg Cu/L)	Below 1.0	Below 0.1	x	
Sulfate ion (mg SO_4^{2}/L)	Must not be detected	Must not be detected	x	
Ammonium ion (mg NH_4^+)L	Below 0.3	Below 0.1	x	
Residual chlorine (mg CL/L)	Below 0.25	Below 0.3	x	
Free carbon dioxide (mg CO_2/L)	Below 0.4	Below 4.0	x	
Stability index			x	x

x = possibility of occurrence.
Inhibitors should be used in the water loop, especially if water temperature operate is above 104°F.
Air shall be purged from the system.

Due to our policy of continuous product innovation, some specifications may change without notification.
©LG Electronics U.S.A., Inc., Englewood Cliffs, NJ. All rights reserved. "LG" is a registered trademark of LG Corp.

Water Piping System Insulation

Water pipe insulation is suggested if the following conditions exist:

- Water pipe is subject to freezing.
- Water pipe is located where water can condensate on the surface of the pipe from ambient room temperatures higher than the temperature of the water in the pipe.
  - If water temperature is maintained at 68°F in winter and 86°F in summer, insulation will not be required.
- Boiler piping (to save energy losses from the boiler).
- Where required by local codes.

Open Tower Design Schematic

⚠ ***Note:*** When using an open cooling tower or open geothermal wells, an intermediate heat exchanger is recommended to be installed to protect the water source unit from contamination.

Figure 74: Open Tower Design Schematic—Requires Intermediate Heat Exchanger

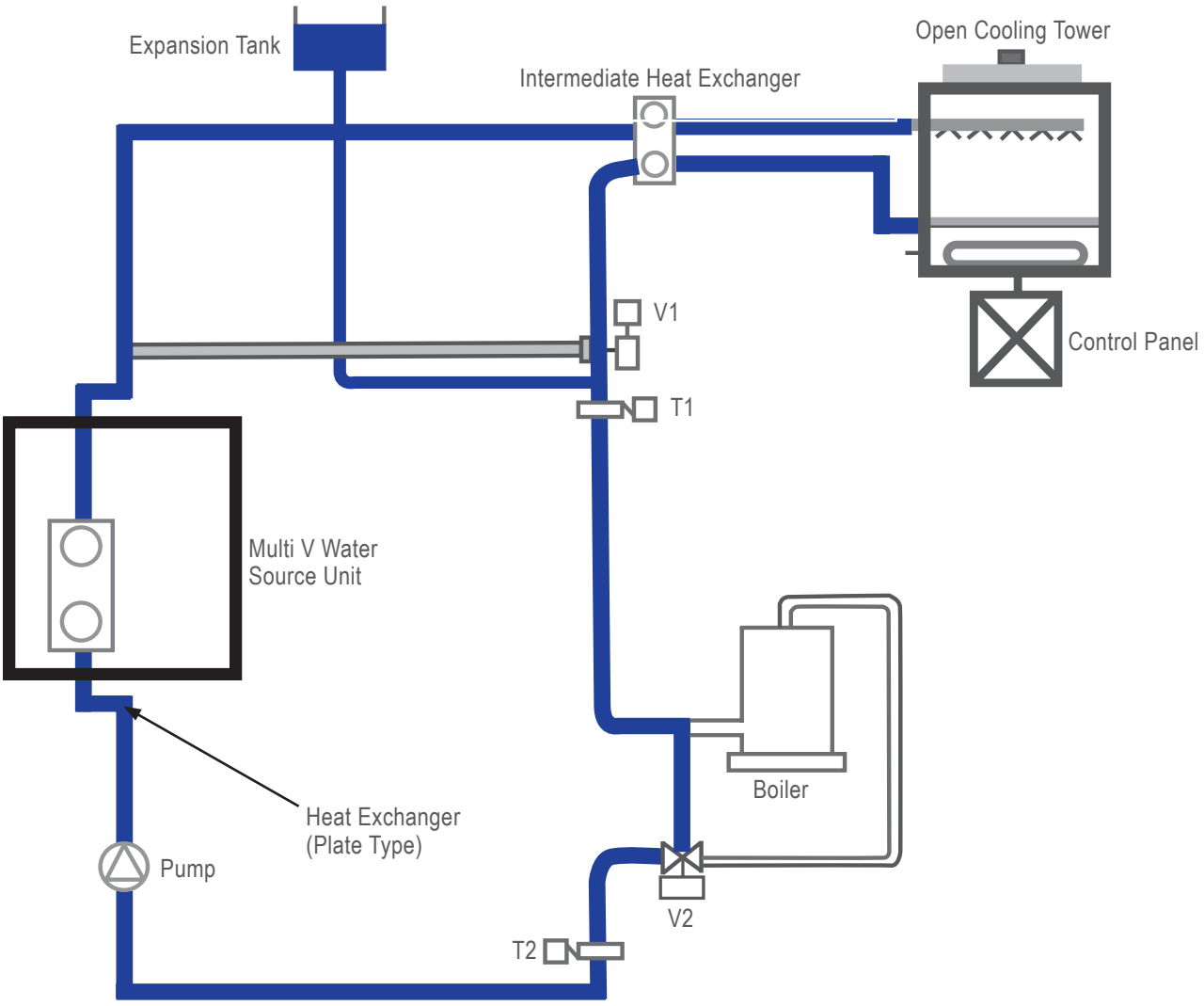

Due to our policy of continuous product innovation, some specifications may change without notification.
©LG Electronics U.S.A., Inc., Englewood Cliffs, NJ. All rights reserved. "LG" is a registered trademark of LG Corp.

The Variable Water Flow Control kit allows connection of Multi V Water units to a variable pumping condenser water system. The control board, transformer, and wiring provide connections to a field-supplied modulating water valve.

Variable Water Flow Control Kit Parts (included)

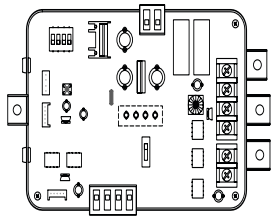 Variable Water Flow Control PCB	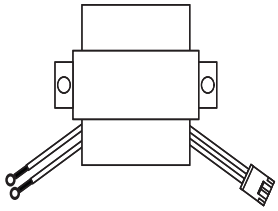 Transformer
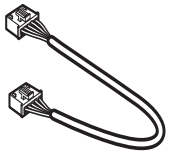 Cable Assembly	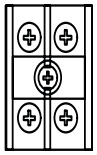 Terminal Block Assembly
 Screws	

Variable Water Flow Control Kit PCB

1. CN_PWR: Power input terminal (DC 12V)
2. CN_AO: Signal output terminal to control a water flow control valve (DC 0~10V)
3. CN_OUT: Water-source unit connector
4. BUS_A: RS-485 (+) terminal
5. BUS_B: RS-485 (-) terminal
6. SWDIP: Switch to select main function
7. SW1: Reset switch

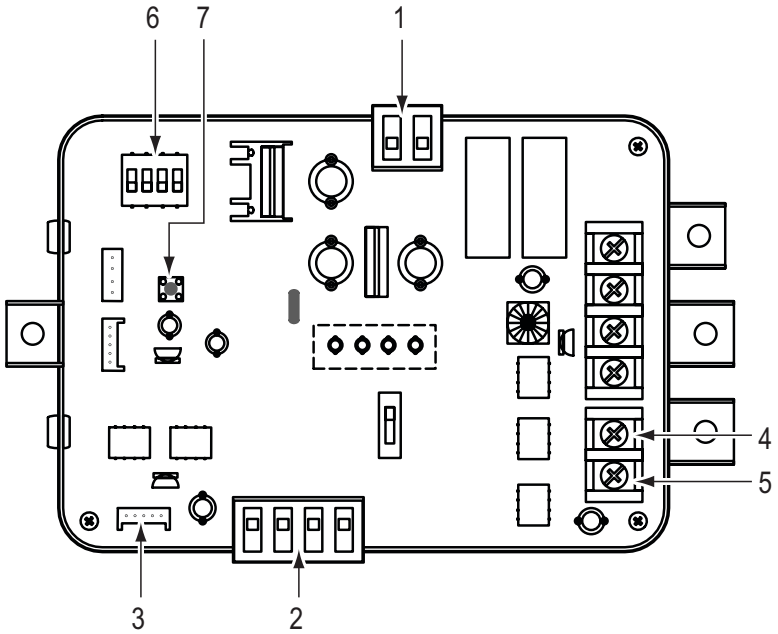

Due to our policy of continuous product innovation, some specifications may change without notification.
©LG Electronics U.S.A., Inc., Englewood Cliffs, NJ. All rights reserved. "LG" is a registered trademark of LG Corp.

VARIABLE WATER FLOW CONTROL KIT

Accessory

Installation

1. Shut off the main power to the water-source unit.
2. Install the Variable Water Flow Control (VWFC) PCB in the control box by using the included screws.
3. Install the transformer in the control box by using the included screws.
4. Install the terminal block in the control box by using the included screws.
5. Connect the Main PCB (CN41) to the VWFC (CN_OUT) by using the cable assembly.
6. Connect the blue wire of transformer to the Main PCB (JIG1[L], JIG2[N]).
7. Connect the red wire of transformer to the terminal block (two-pin, yellow terminal block).
8. Connect a power cable (DC 12V) to CN_PWR (12V, GND) of the VWFC.
9. Connect a signal cable (DC 0~10V) of the water flow control valve to CN_AO (AO_01[A+], GND[A-]) of the VWFC.
10. Case of two water flow control valve, Connect a signal cable (DC 0~10V) of water flow control valve to CN_AO (AO_02[B+], GND[B-]) of VWFC.
11. Connect a power cable (AC 24V) of the water flow control valve to the terminal block (two-pin, yellow terminal block, max. current 0.42A).
12. Connect the RS-485 communication cable to CN_COMM (BUS_A, BUS_B) of VWFC.
13. Set the main function dip switch of the VWFC PCB.
14. Set the dip switch of the water-source unit main PCB.
15. Turn on the main power to the water-source unit.
16. Check the signal of water flow control valve to CN_AO (AO_01, GND) of VWFC, and check the water flow rate.

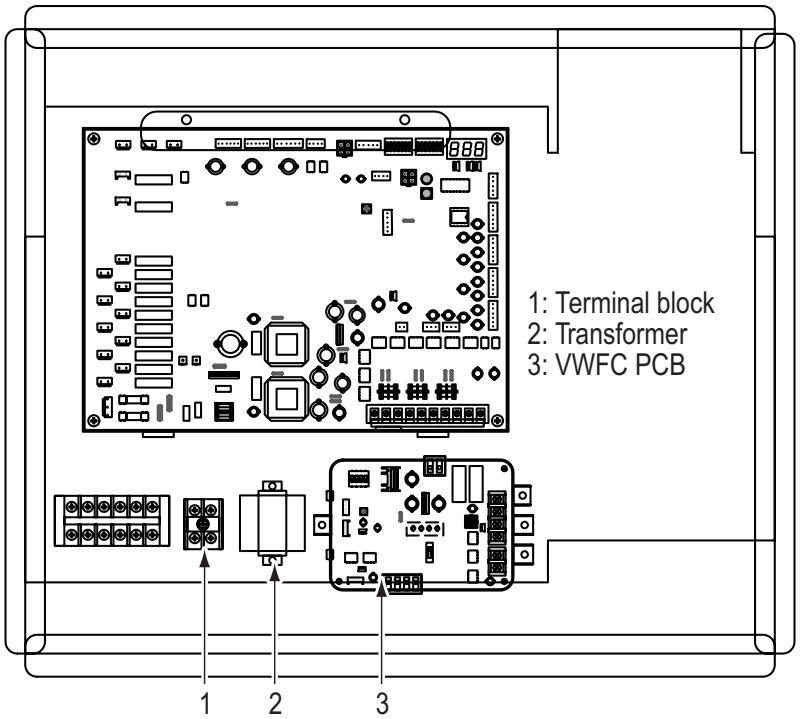

Note:

- Install the product on a flat surface with the enclosed screws, otherwise, the VWFC PCB may not be anchored properly.
- Do not damage the case of the Variable Water Flow Control Kit as it may cause the PCB to malfunction.

Due to our policy of continuous product innovation, some specifications may change without notification.
©LG Electronics U.S.A., Inc., Englewood Cliffs, NJ. All rights reserved. "LG" is a registered trademark of LG Corp.

Figure 75: Variable Water Flow Control Kit Wiring Diagram

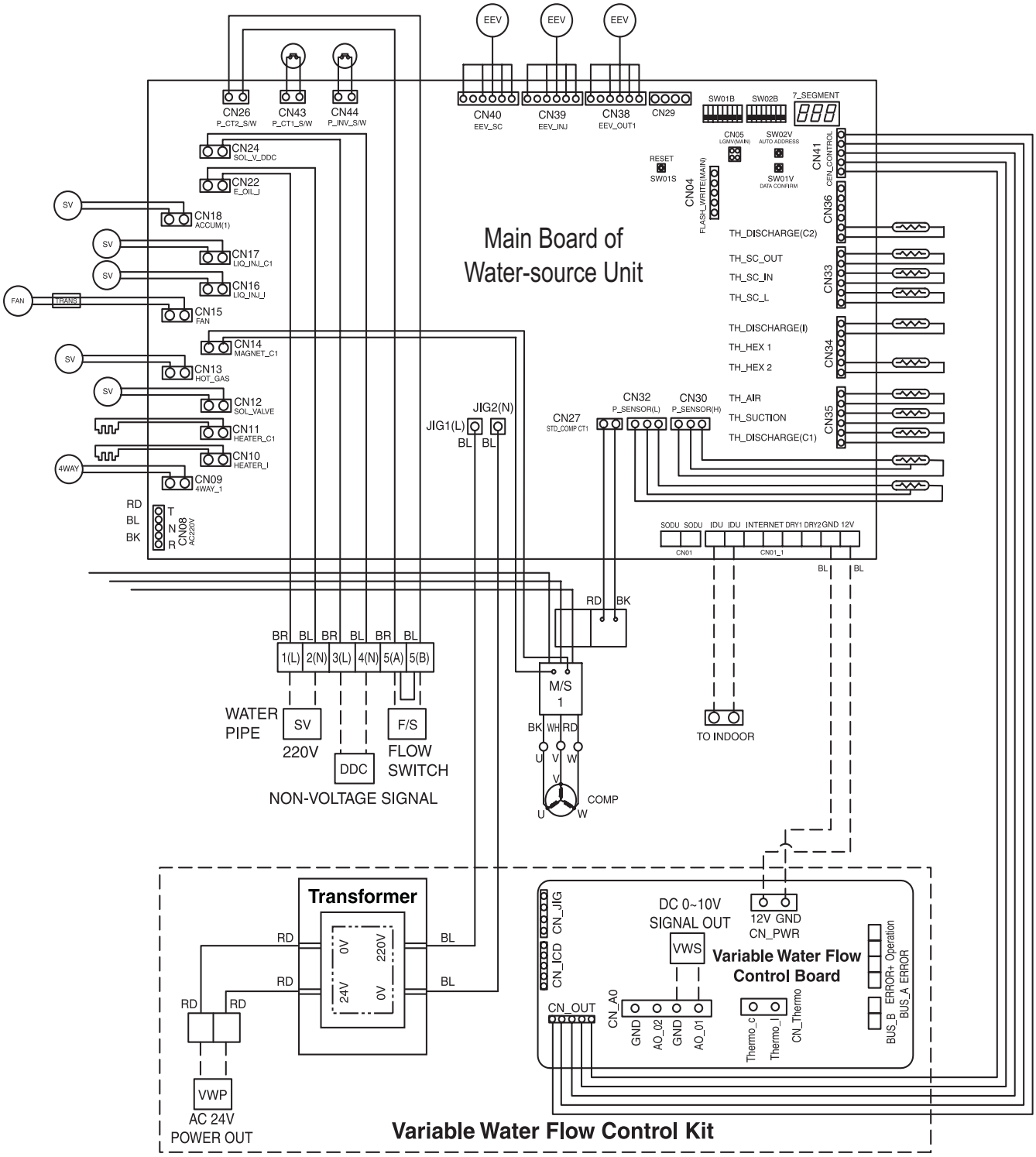

Due to our policy of continuous product innovation, some specifications may change without notification.
©LG Electronics U.S.A., Inc., Englewood Cliffs, NJ. All rights reserved. "LG" is a registered trademark of LG Corp.

Variable Water Flow Control Kit Power Source Input

Figure 76: When wiring the power source from the water-source unit.

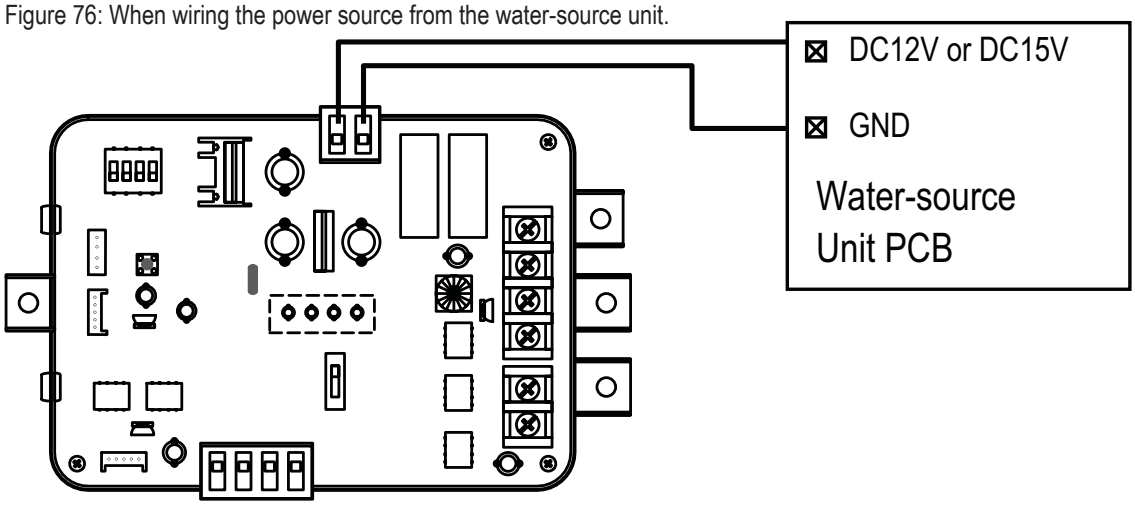

Figure 77: When wiring an external power source.

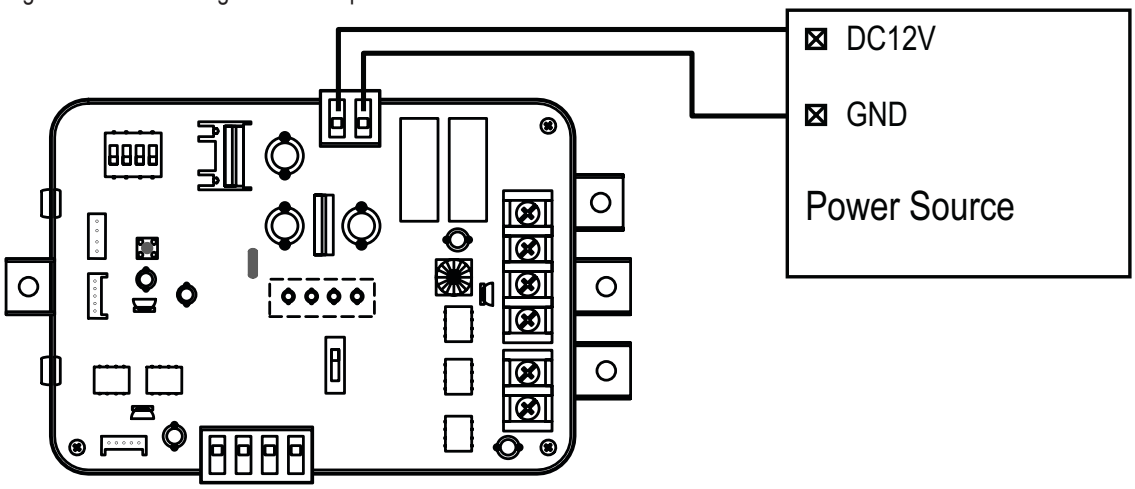

⚠ *Note:*

- The Variable Water Flow Control Kit can accept only DC power input. Do not use 220VAC power input as it will cause serious damage to the unit.
- The use of an external power source is recommended.

Due to our policy of continuous product innovation, some specifications may change without notification.
©LG Electronics U.S.A., Inc., Englewood Cliffs, NJ. All rights reserved. "LG" is a registered trademark of LG Corp.

Figure 78: Wiring for the Variable Water Flow Control Kit Power Source PCB and Transformer

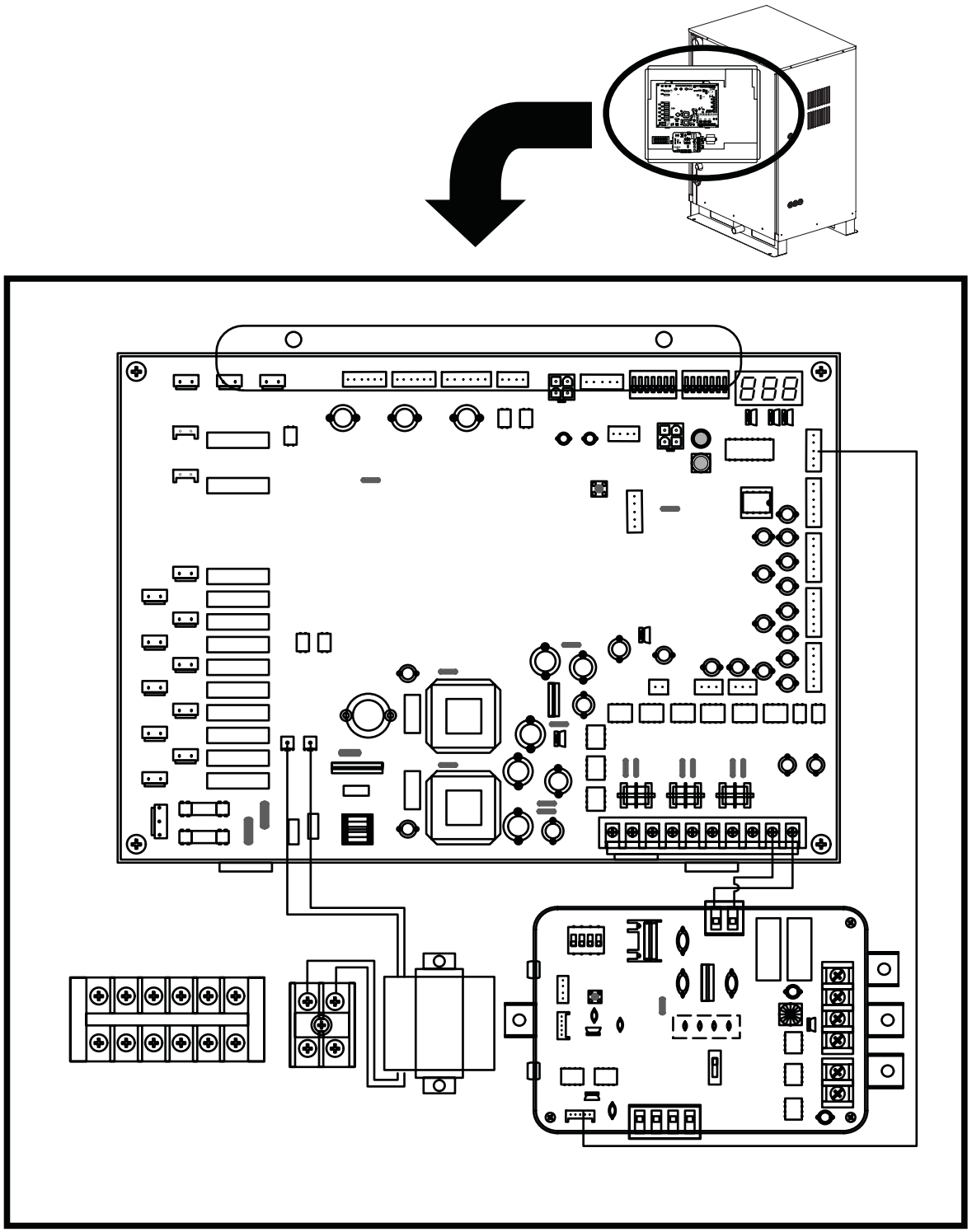

⚠ *Note:*
- PCB and transformer can accept only DC 12V power input. Do not use AC power input as it will cause serious damage to the unit.
- AWG 23 wiring is recommended for the power (DC 12V) line.

Due to our policy of continuous product innovation, some specifications may change without notification.
©LG Electronics U.S.A., Inc., Englewood Cliffs, NJ. All rights reserved. "LG" is a registered trademark of LG Corp.

VARIABLE WATER FLOW CONTROL KIT

Accessory

Figure 79: Wiring for the Variable Water Flow Control Kit Valve

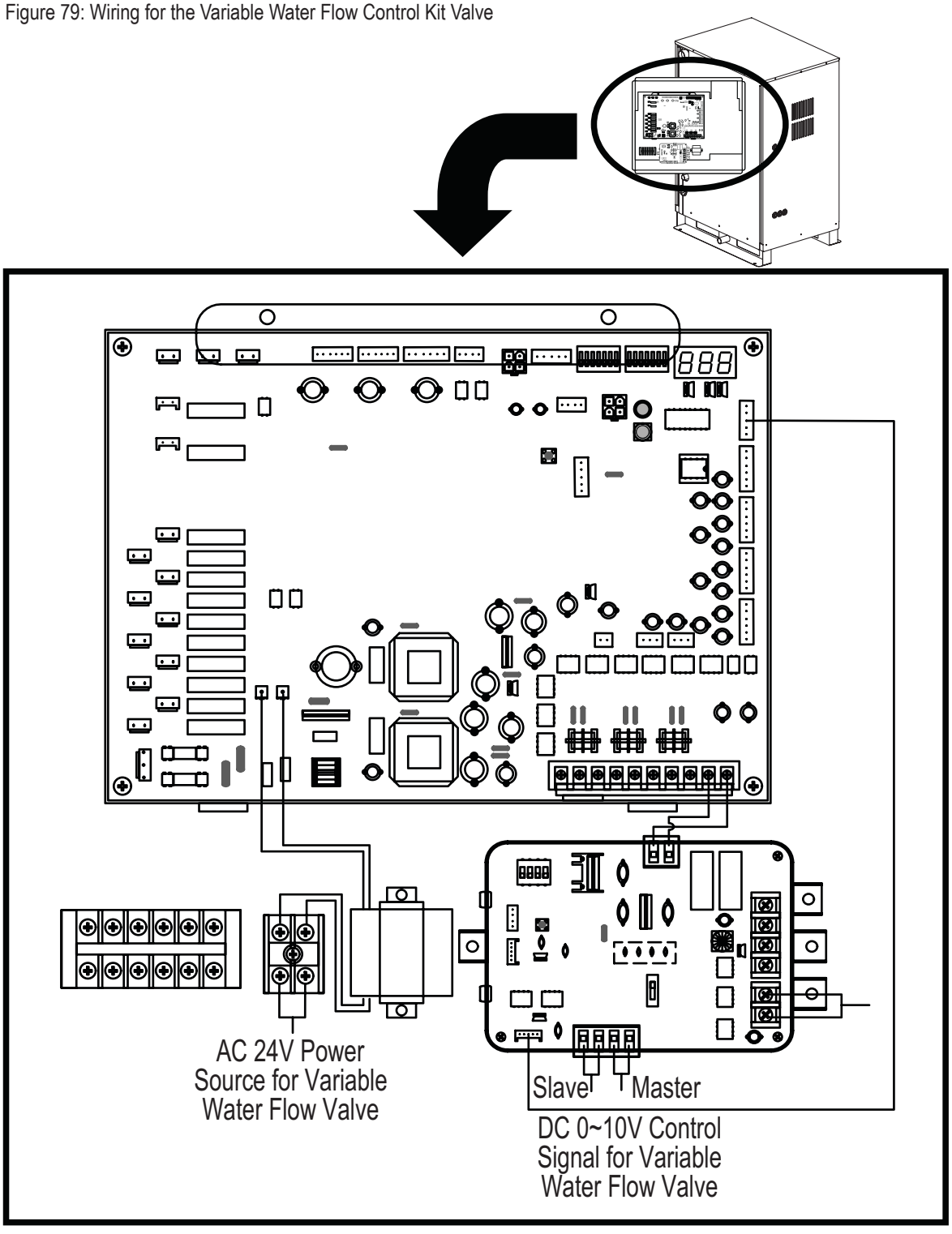

Note:

- The Variable Water Flow Control Kit can control a maximum of two valves. If only one valve is present, then the slave signal connector must not be used.
- AWG 23 wiring is recommended for the power (AC 12V) line and signal (DC 0~10V) line.

Due to our policy of continuous product innovation, some specifications may change without notification.
©LG Electronics U.S.A., Inc., Englewood Cliffs, NJ. All rights reserved. "LG" is a registered trademark of LG Corp.

Figure 80: Variable Water Flow Control Kit Dip Switch Settings

Using 'SWDIP,' select the control function using the dip switches as described below.

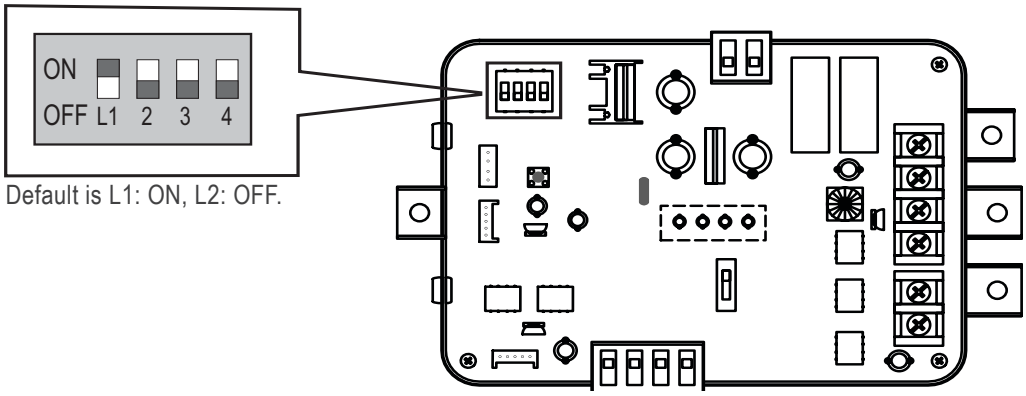

Default is L1: ON, L2: OFF.

Output Signal Setting

Dip Switch Setting	Function
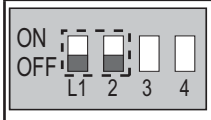	Control signal : DC 0V(OFF), DC 8~10V(ON)
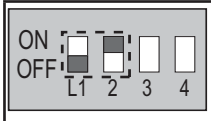	Control signal : DC 0V(OFF), DC 6~10V(ON)
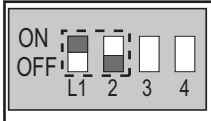	Control signal : DC 0V(OFF), DC 4~10V(ON) Default status
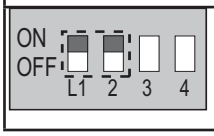	Control signal : DC 0V(OFF), DC 2~10V(ON)

RS-485 Communication Function Setting

Dip Switch Setting	Function
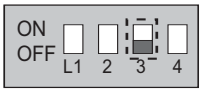	RS-485 communication function enable
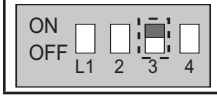	RS-485 communication function disable

⚠ *Note:*

- After the dip switch setting is changed, the reset switch must be pressed to reflect the setting.
- Before operating the water-source unit, check the water flow rate and the PCB voltage signal.
- Minimum flow rate recommended 40% of rated flow rate; if the flow rate is lower, it will damage the water-source unit.

Due to our policy of continuous product innovation, some specifications may change without notification.
©LG Electronics U.S.A., Inc., Englewood Cliffs, NJ. All rights reserved. "LG" is a registered trademark of LG Corp.

Figure 81: Water-source Unit Dip Switch Settings

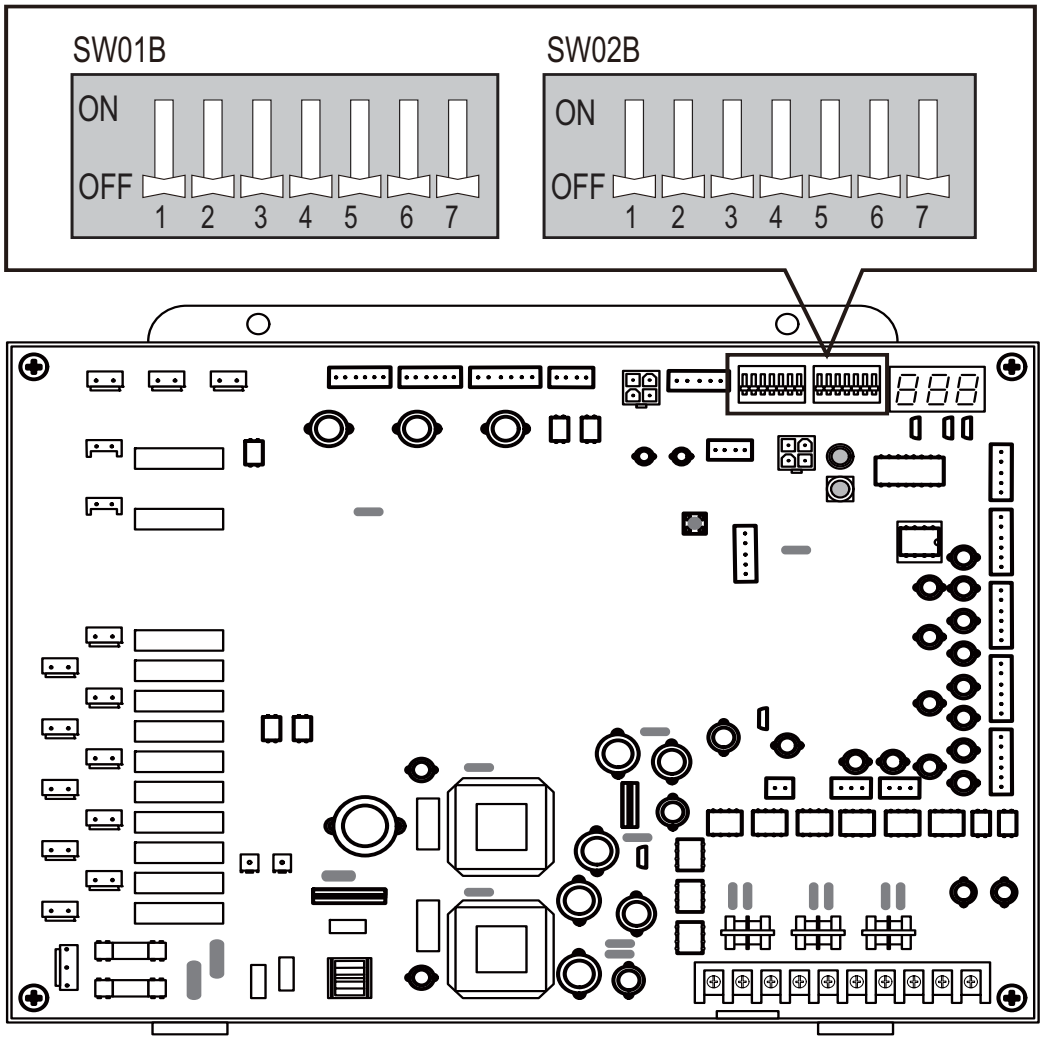

Dip Switch Setting	Function
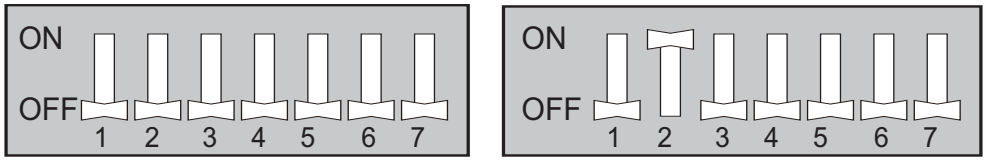	Variable Water Flow Control Mode

⚠ *Note:*

- After the dip switch setting is changed, the reset switch must be pressed to reflect the setting.
- Before operating the water-source unit, check the water flow rate and the PCB voltage signal.
- Minimum flow rate recommended 40% of rated flow rate. If the flow rate is lower, it will damage the water-source unit.

Due to our policy of continuous product innovation, some specifications may change without notification.
©LG Electronics U.S.A., Inc., Englewood Cliffs, NJ. All rights reserved. "LG" is a registered trademark of LG Corp.

CUT-SHEETS

“Unit Dimensions—ARWB072BA2, ARWN072BA2, ARWB144BA2, ARWN144BA2, ARWB096DA2, ARWN096DA2, ARWB192DA2, ARWN192DA2” on page 249

“Unit Dimensions—ARWB216BA2, ARWN216BA2, ARWB288BA2, ARWN288BA2, ARWB290DA2, ARWN290DA2, ARWB390DA2, ARWN390DA2” on page 250

“Unit Dimensions—ARWB360BA2, ARWN360BA2, ARWB432BA2, ARWN432BA2, ARWB480DA2, ARWN480DA2, ARWB580DA2, ARWN580DA2” on page 251

“Unit Dimensions—PRHR021A” on page 252

“Unit Dimensions—PRHR031A” on page 253

“Unit Dimensions—PRHR041A” on page 254

“HR Unit Reducers” on page 255

“Connecting Branch Pipes (Heat Pump ARWN)” on page 256

“Connecting Branch Pipes (Heat Recovery ARWB)” on page 257

“Y-Branch Kits (Heat Recovery)” on page 258

“Y-Branch Kits (Heat Pump and Heat Recovery)” on page 260

“Header Kits (Heat Pump)” on page 262

CUT-SHEET

Unit Dimensions—ARWB072BA2, ARWN072BA2, ARWB144BA2, ARWN144BA2, ARWB096DA2, ARWN096DA2, ARWB192DA2, ARWN192DA2

Figure 82:

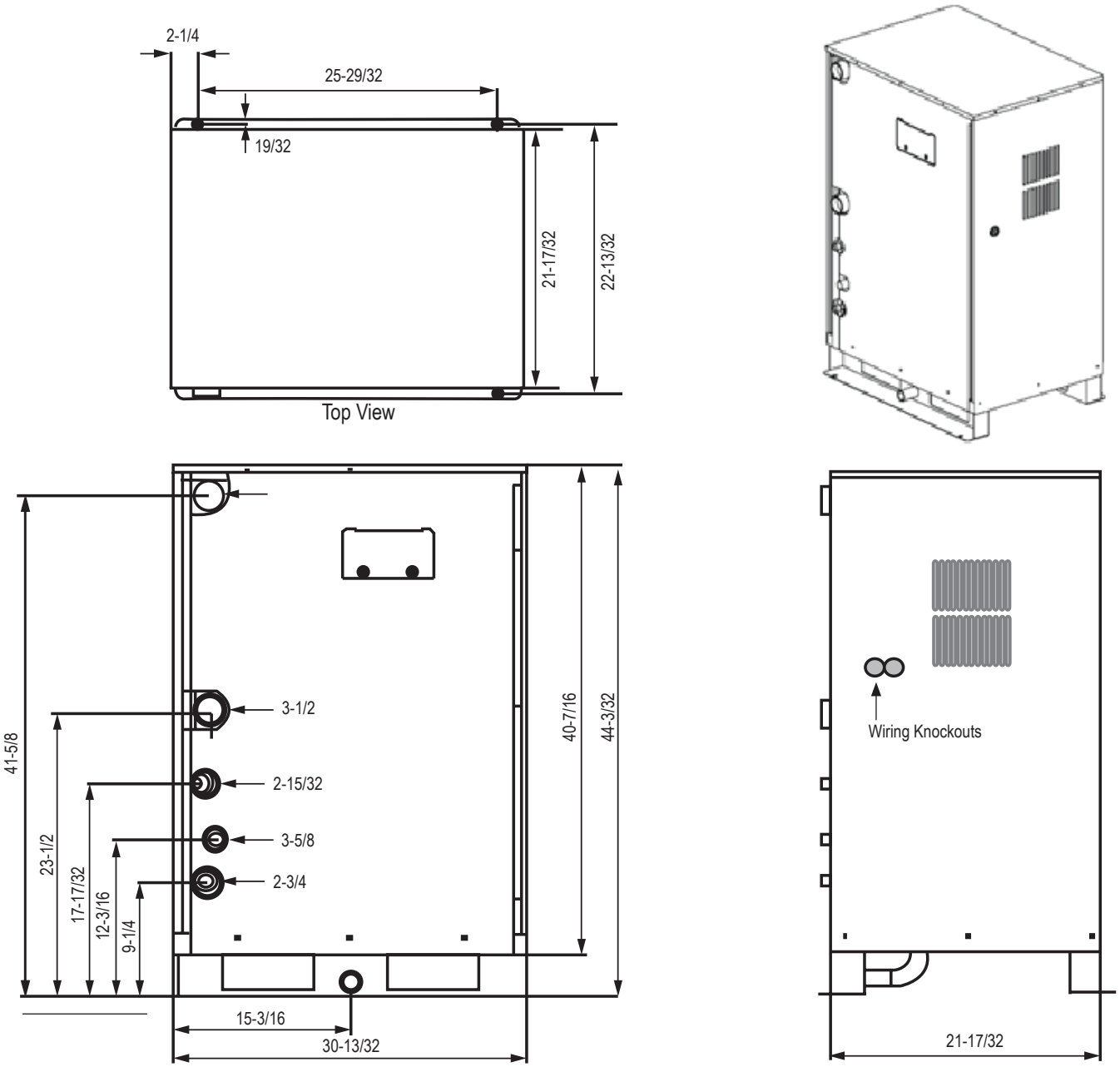

Due to our policy of continuous product innovation, some specifications may change without notification.
©LG Electronics U.S.A., Inc., Englewood Cliffs, NJ. All rights reserved. "LG" is a registered trademark of LG Corp.

Unit Dimensions—ARWB216BA2, ARWN216BA2, ARWB288BA2, ARWN288BA2, ARWB290DA2, ARWN290DA2, ARWB390DA2, ARWN390DA2

Figure 83:

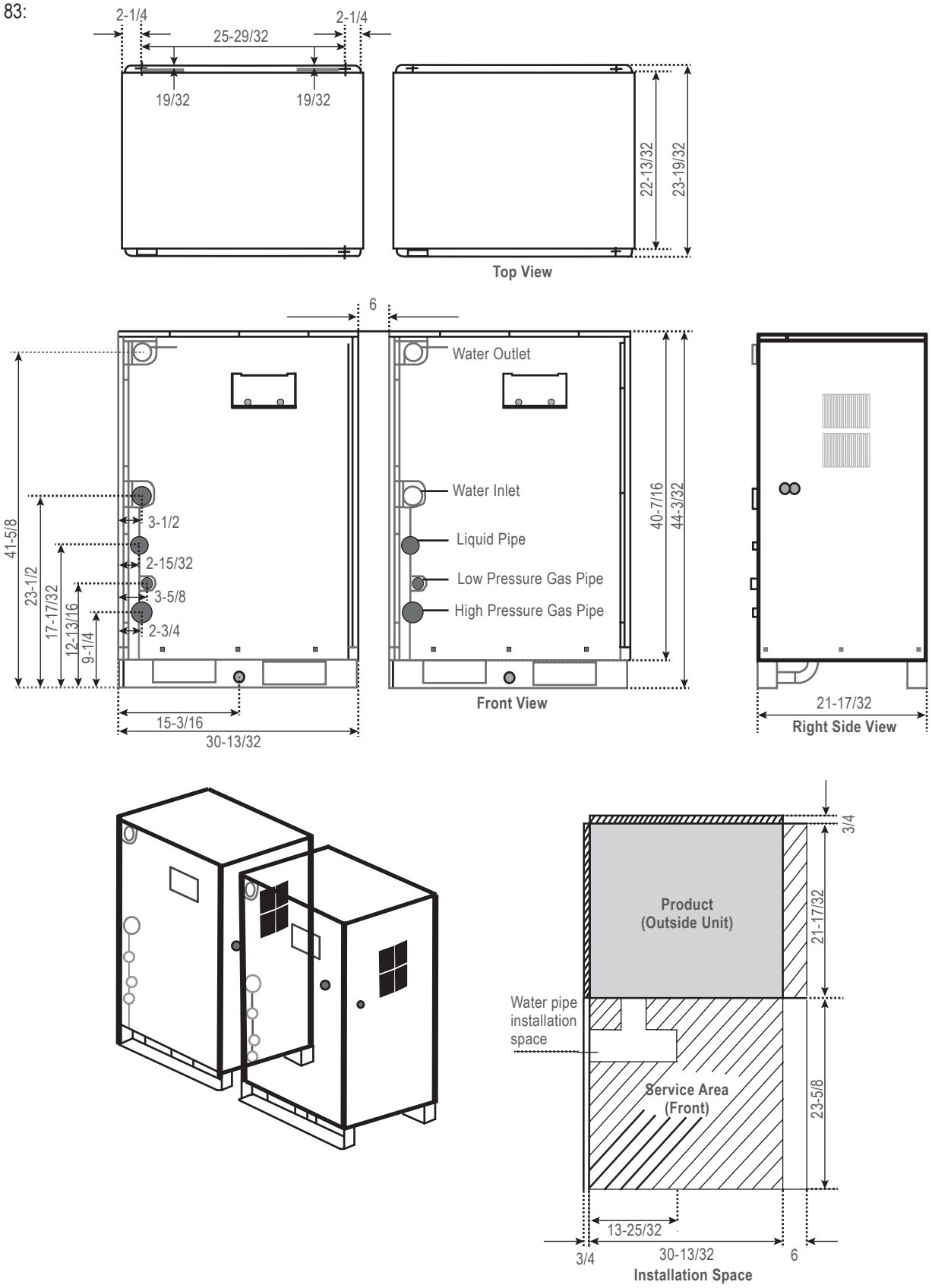

Due to our policy of continuous product innovation, some specifications may change without notification.
©LG Electronics U.S.A., Inc., Englewood Cliffs, NJ. All rights reserved. "LG" is a registered trademark of LG Corp.

CUT-SHEET

Unit Dimensions— ARWB360BA2, ARWN360BA2, ARWB432BA2, ARWN432BA2, ARWB480DA2, ARWN480DA2, ARWB580DA2, ARWN580DA2

Figure 84:

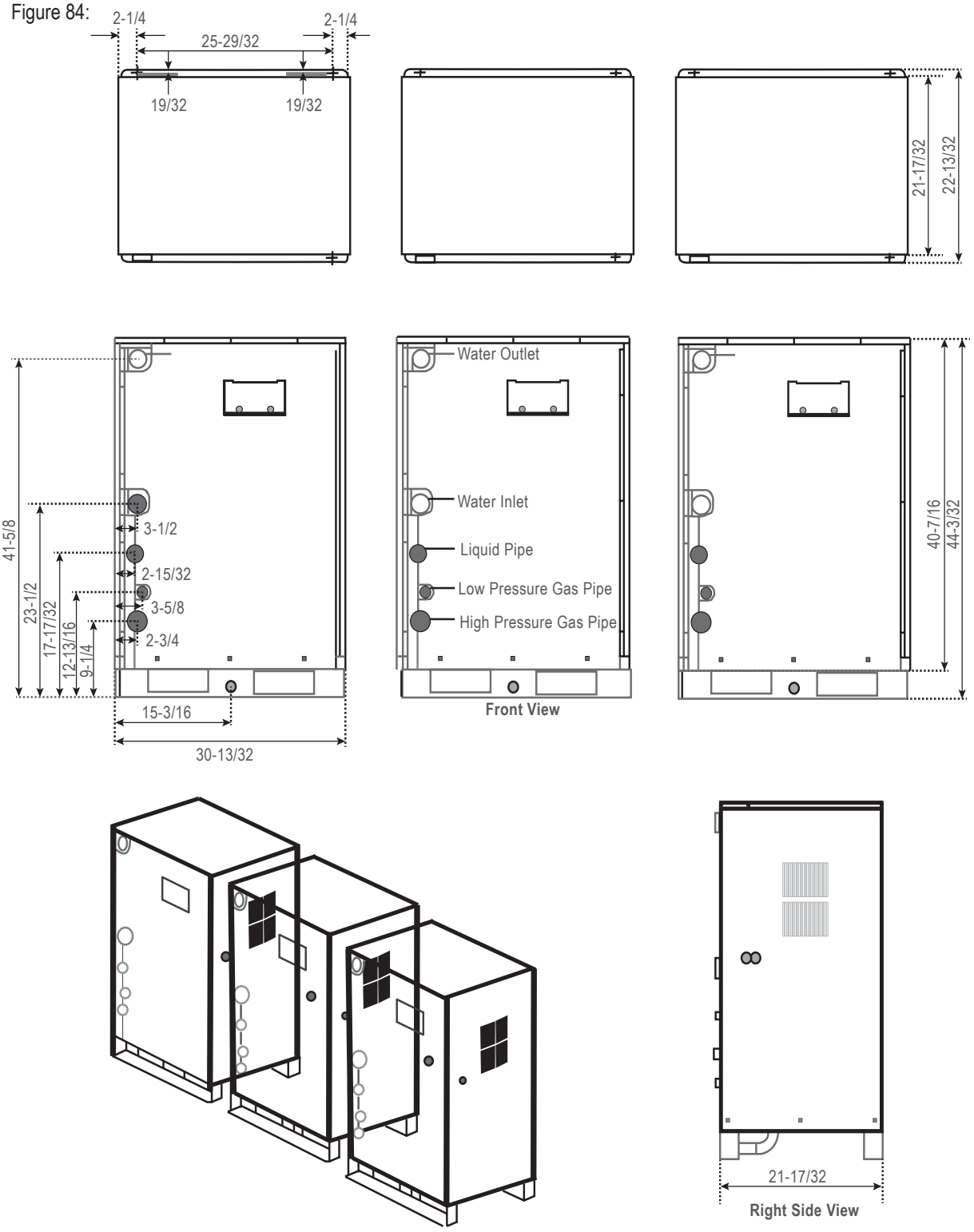

Cut-Sheets

Due to our policy of continuous product innovation, some specifications may change without notification.
©LG Electronics U.S.A., Inc., Englewood Cliffs, NJ. All rights reserved. "LG" is a registered trademark of LG Corp.

Figure 85:

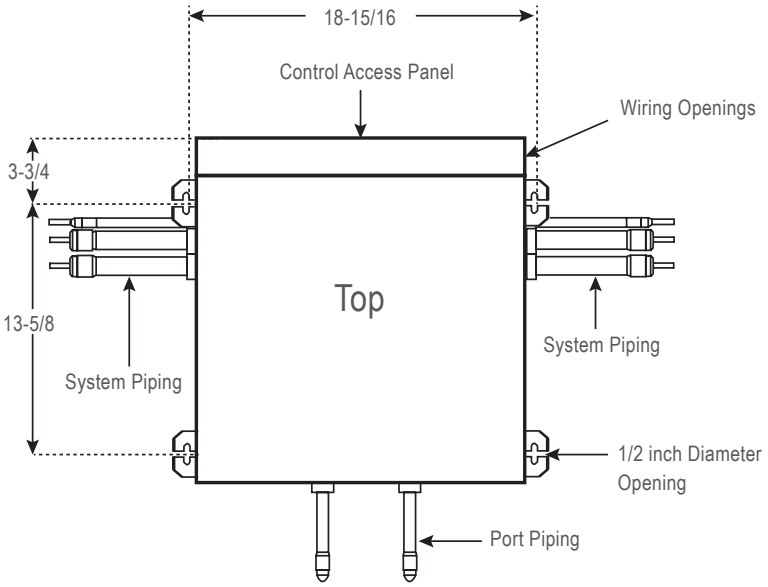

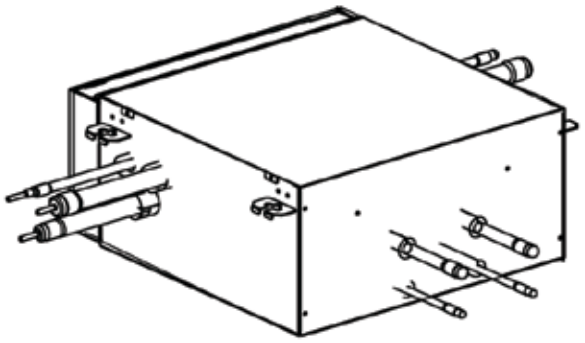

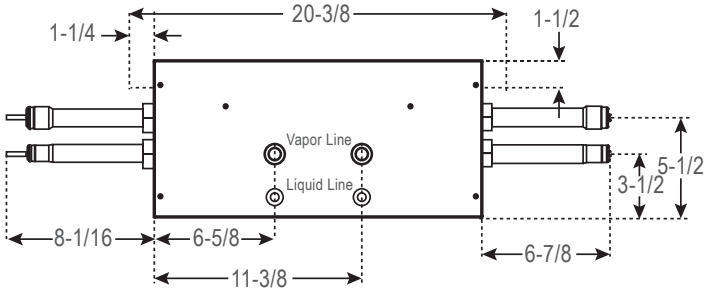

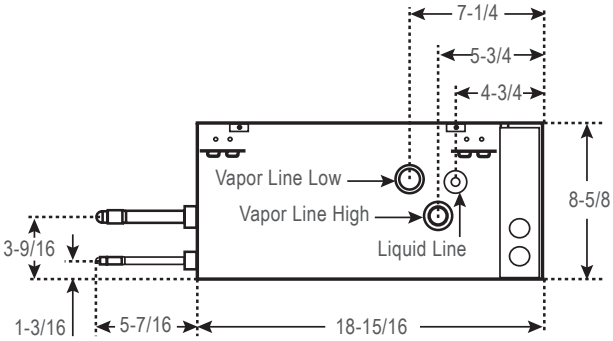

Due to our policy of continuous product innovation, some specifications may change without notification.
©LG Electronics U.S.A., Inc., Englewood Cliffs, NJ. All rights reserved. "LG" is a registered trademark of LG Corp.

CUT-SHEET

Unit Dimensions—PRHR031A

Figure 86:

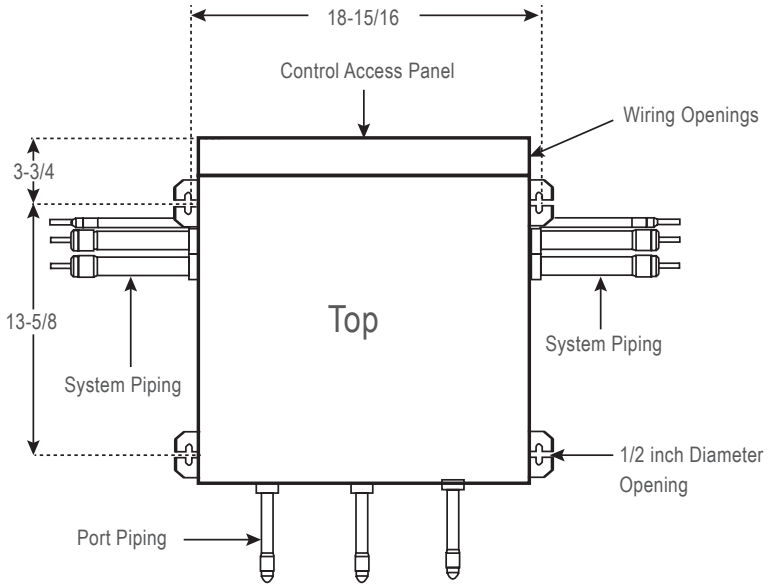

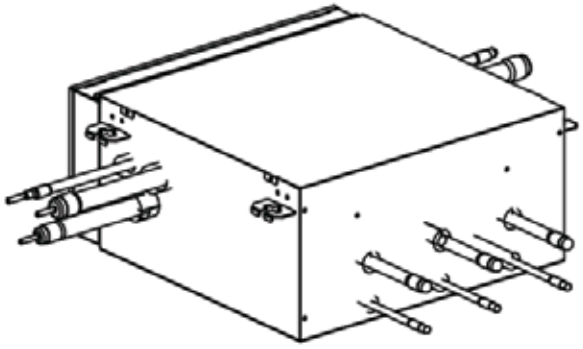

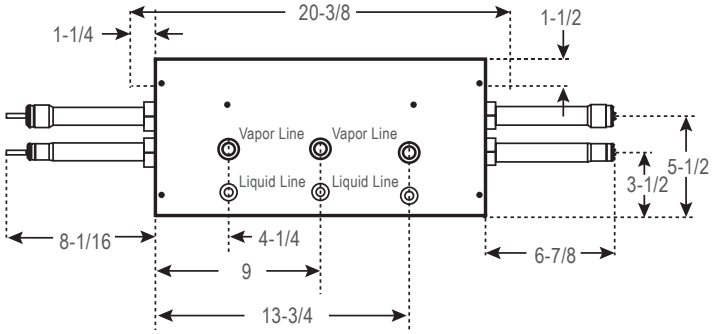

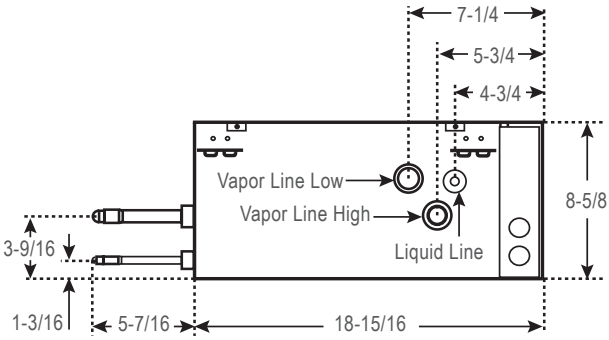

Cut-Sheets

Due to our policy of continuous product innovation, some specifications may change without notification.
©LG Electronics U.S.A., Inc., Englewood Cliffs, NJ. All rights reserved. "LG" is a registered trademark of LG Corp.

Figure 87:

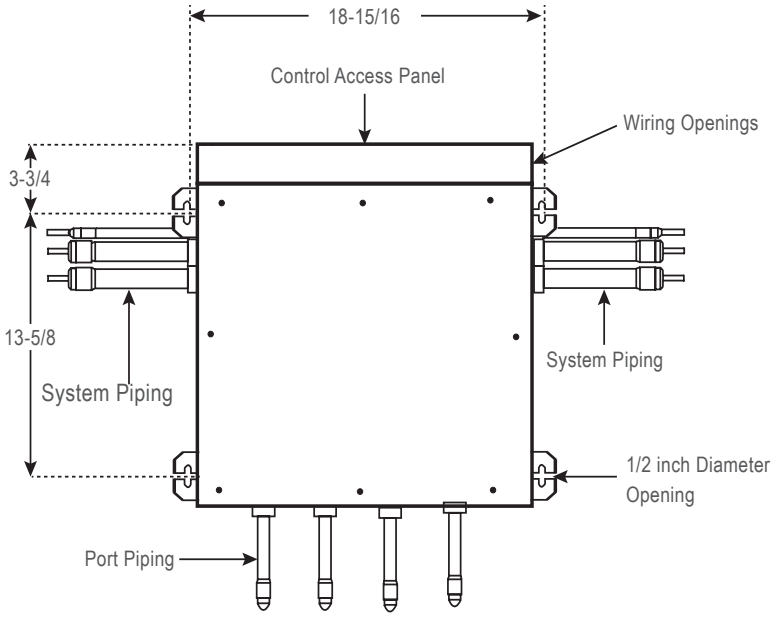

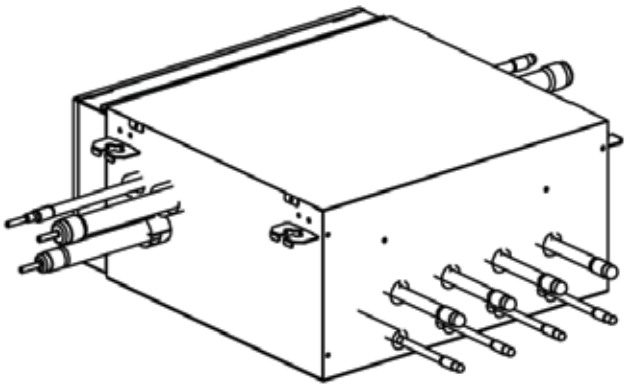

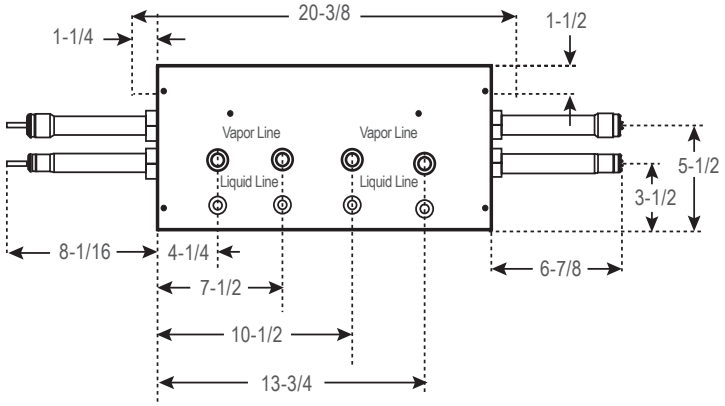

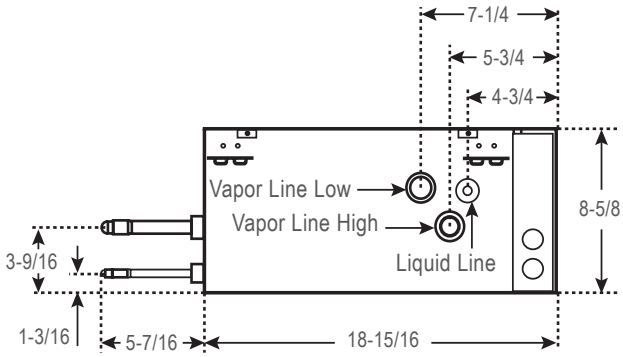

Due to our policy of continuous product innovation, some specifications may change without notification.
©LG Electronics U.S.A., Inc., Englewood Cliffs, NJ. All rights reserved. "LG" is a registered trademark of LG Corp.

CUT-SHEET

HR Unit Reducers

Figure 88: Reducers for HR unit

		Liquid Pipe	Gas Pipe	
			High Pressure	Low Pressure
Indoor Unit Reducer		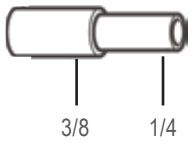		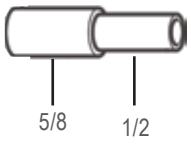
HR Unit Reducer	PRHR020A	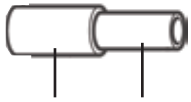	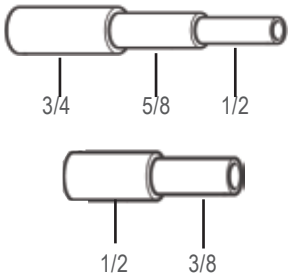	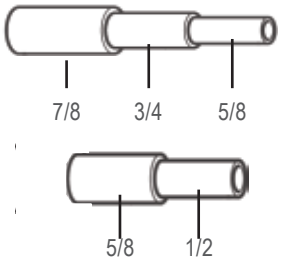
	PRHR030A / PRHR040A	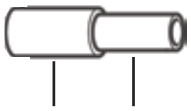	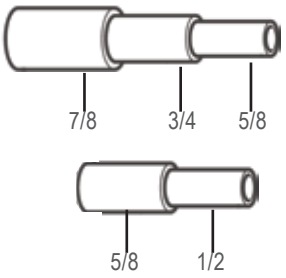	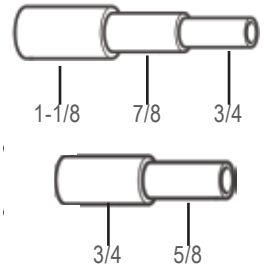

Cut-Sheets

Due to our policy of continuous product innovation, some specifications may change without notification.
©LG Electronics U.S.A., Inc., Englewood Cliffs, NJ. All rights reserved. "LG" is a registered trademark of LG Corp.

Two water-source units—Heat pump

Unit: inch

Combination	Multi-frame Connector	Vapor pipe	Liquid pipe
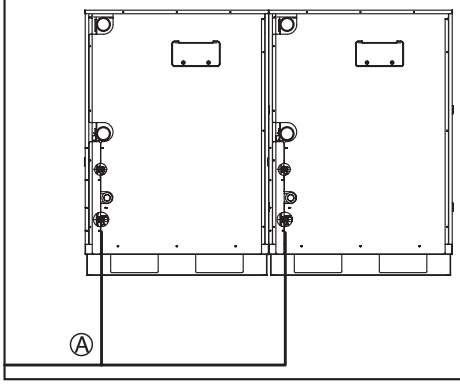	Ⓐ ARCNN21	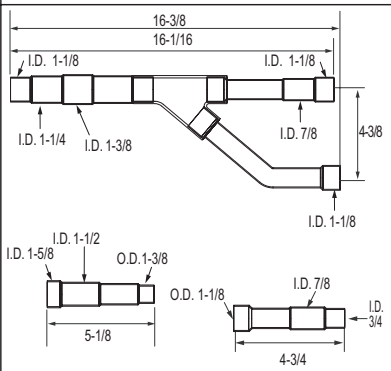	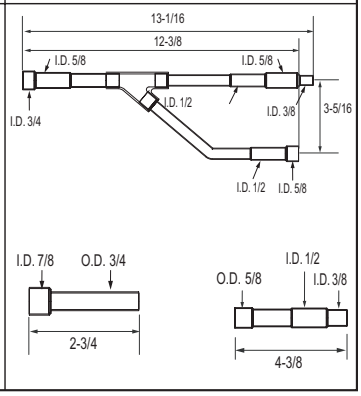

Three water-source units—Heat pump

Unit: inch

Combination specification	Multi-frame Connector	Vapor pipe	Liquid pipe
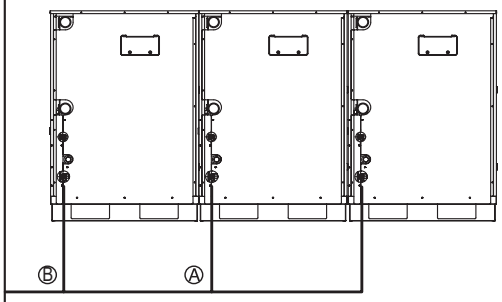	Ⓐ ARCNN21	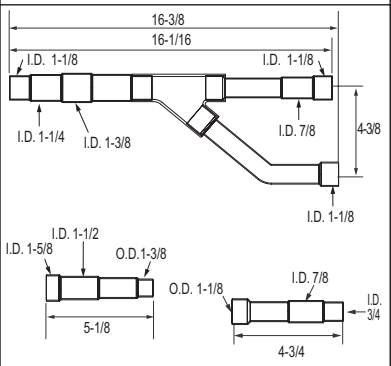	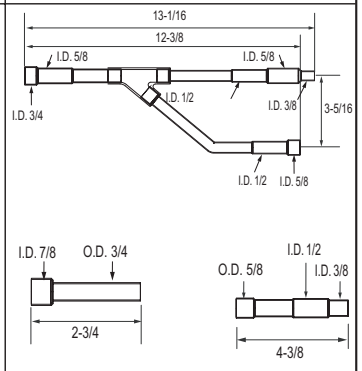
	Ⓑ ARCNN31	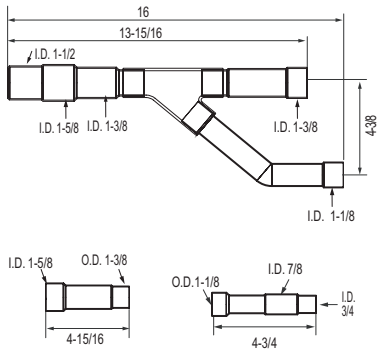	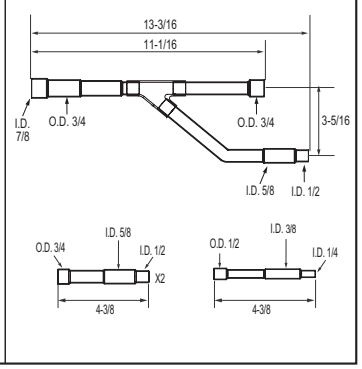

Due to our policy of continuous product innovation, some specifications may change without notification.
©LG Electronics U.S.A., Inc., Englewood Cliffs, NJ. All rights reserved. "LG" is a registered trademark of LG Corp.

CUT-SHEET

Connecting Branch Pipes (Heat Recovery ARWB)

Two water-source units—Heat recovery

Unit: inch

Combination specification	Multi-frame Connector	Low-pressure Vapor Pipe	Liquid Pipe	High-pressure Vapor Pipe
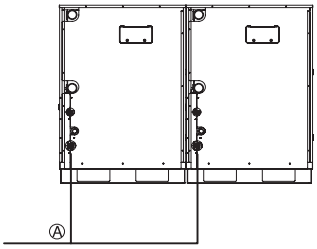	Ⓐ ARCNB21	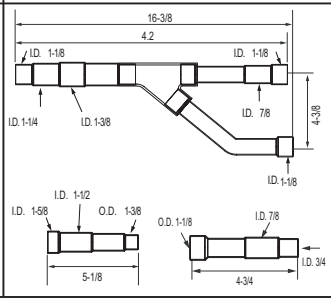	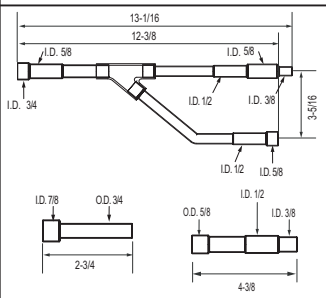	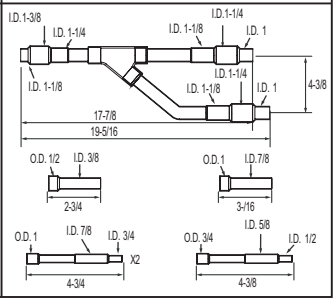

Three water-source units—Heat recovery

Unit: inch

Combination specification	Multi-frame Connector	Low-pressure Vapor Pipe	Liquid Pipe	High-pressure Vapor Pipe
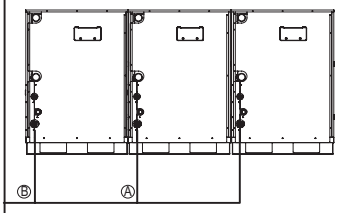	Ⓐ ARCNB21	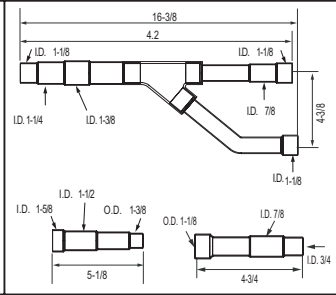	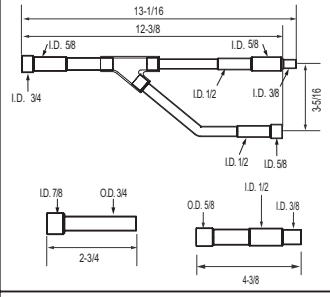	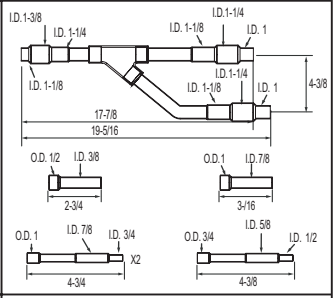
	Ⓑ ARCNB31	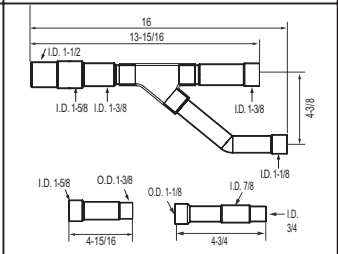	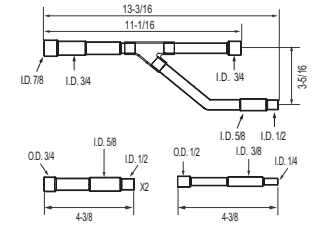	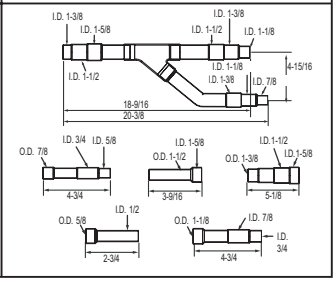

Cut-Sheets

Due to our policy of continuous product innovation, some specifications may change without notification.
©LG Electronics U.S.A., Inc., Englewood Cliffs, NJ. All rights reserved. "LG" is a registered trademark of LG Corp.

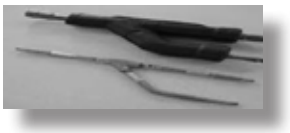

CUT-SHEET

Y-Branch Kits (Heat Recovery)

Figure 89: Y-Branch Connectors
(See Table 66)

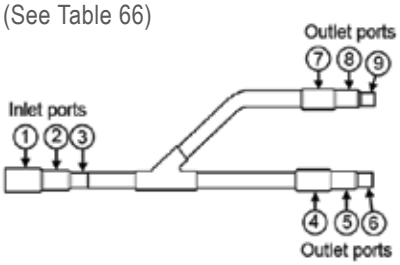

Figure 90: Y-Branch Connection Dimensions
(See Table 67)

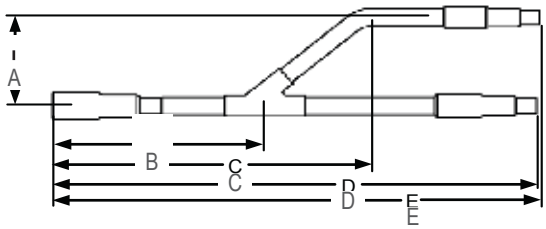

Figure 91: Reducer Parts
(See Table 68)

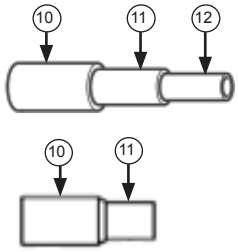

Insulation Jacket Properties

Material	Polyolefin Foam
UL94 Flame Classification	HF-1
Density	1.84 lbm/ft3
Thermal Conductivity	.0208 BtuH/ft ºR
Thickness	0.5 Inches

Fitting Properties

Material	Copper
Design Pressure	551 psig

Table 66:Y-Branch Connection Diameters (in, ID)
(See Figure 89)

Model	Y-Branch Type	Port Identifier								
		1	2	3	4	5	6	7	8	9
ARBLB01621	Liquid	—	1/4	3/8	3/8	1/4	—	3/8	1/4	—
	Low Pressure Vapor	—	5/8	1/2	1/2	5/8	—	1/2	5/8	—
	High Pressure Vapor	3/8	5/8	1/2	1/2	5/8	3/8	1/2	5/8	3/8
ARBLB03321	Liquid	—	1/2	3/8	3/8	1/2	1/4	3/8	1/2	1/4
	Low Pressure Vapor	1	7/8	3/4	5/8	3/4	1/2	5/8	3/4	1/2
	High Pressure Vapor	3/4	1	7/8	7/8	3/8	5/8	7/8	3/4	5/8
ARBLB07121	Liquid	1/2	3/4	5/8	5/8	3/4	1/2	5/8	3/4	1/2
	Low Pressure Vapor	—	1-1/4	1-1/8	7/8	3/4	5/8	3/4	5/8	1/2
	High Pressure Vapor	—	1-1/8	1	7/8	1	3/4	7/8	1	3/4
ARBLB14521	Liquid	5/8	7/8	3/4	7/8	3/4	5/8	3/4	5/8	1/2
	Low Pressure Vapor	1-3/8	1-1/2	1-5/8	1-1/2	1-3/8	1-1/8	1-3/8	1-1/8	7/8
	High Pressure Vapor	1-1/8	1-3/8	1-1/4	1-1/8	1-1/4	1	1-1/8	1-1/4	1

Table 67: Y-Branch Dimensions (in)
(See Figure 90)

Model	Y-Branch Type	A	B	C	D	E
ARBLB01621	Liquid	2-29/32	6-9/16	8-1/32	11-1/16	11-1/2
	Low Pressure Vapor	2-29/32	4-1/2	7-31/32	11-1/16	11-1/2
	High Pressure Vapor	2-29/32	6-3/32	9-7/16	13-13/16	14-21/32
ARBLB03321	Liquid	2-29/32	4-1/2	8-1/32	12-5/8	13-1/16
	Low Pressure Vapor	3-9/32	6-29/32	10-7/8	15-11/32	16-1/4
	High Pressure Vapor	3-25/32	7-3/32	11-3/8	16-9/16	17-15/32
ARBLB07121	Liquid	3-9/32	6-1/8	10-1/32	14-9/32	5-1/2
	Low Pressure Vapor	3-25/32	5-1/2	10	14-3/16	15-29/32
	High Pressure Vapor	3-25/32	5-1/2	10-3/32	15	16-3/32
ARBLB14521	Liquid	3-25/32	7-3/32	11-11/16	16-3/8	17-15/32
	Low Pressure Vapor	4-29/32	7-7/8	13-23/32	18-17/32	20-11/32
	High Pressure Vapor	4-3/8	7-7/16	12-3/4	17-27/32	19-11/32

Due to our policy of continuous product innovation, some specifications may change without notification.
©LG Electronics U.S.A., Inc., Englewood Cliffs, NJ. All rights reserved. "LG" is a registered trademark of LG Corp.

CUT-SHEET

Y-Branch Kits (Heat Recovery)

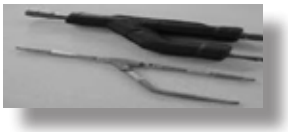

Table 68: Reducer Diameters (in)
(See Figure 91)

Model	Qty/Kit	Reducer type	Port Identifier			
			10	11	12	Length
ARBLB01621	2	Liquid	1/2 ID	3/8 OD	—	2-3/4
		Low Pressure Vapor	3/4 ID	5/8 OD	—	2-3/4
		High Pressure Vapor	—	—	—	—
ARBLB03321	5	Liquid	—	—	—	—
		Low Pressure Vapor	1-1/8 ID	1 OD	—	3-5/32
			7/8 ID	3/4 OD	—	2-3/4
			1 ID	7/8 ID	3/4 OD	4-11/32
		High Pressure Vapor	5/8	1/2	3/8	4-11/32
			5/8	1/2	—	2-3/4
ARBLB07121	8	Liquid	1/2	3/8	1/4	4-11/32
			1/2	3/8	—	2-3/4
		Low Pressure Vapor	1-1/4	1-1/8	7/8	4-23/32
			1-3/8	1-1/4	—	3-17/32
			1-1/8	7/8	3/4	4-23/32
		High Pressure Vapor	1/2	3/8	—	2-3/4
			3/4	5/8	—	2-3/4
			3/4	5/8	1/2	4-11/32
ARBLB14521	12	Liquid	5/8	1/2	3/8	4-11/32
			7/8	3/4	—	3-5/32
			1/2	3/8	1/4	4-11/32
		Low Pressure Vapor	7/8	3/4	5/8	4-23/32
			1-5/8	1-1/2	—	3-17/32
			1-5/8	1-1/2	1-3/8	5-1/8
			5/8	1/2	—	2-3/4
			1-1/8	7/8	3/4	4-23/32
		High Pressure Vapor	1/2	3/8	—	2-3/4
			1	7/8	—	3-5/32
			1	7/8	3/4	4-23/32
			3/4	5/8	1/2	4-11/32

B = Heat Recovery
N = Heat Pump
The Y-Branch kits include a Polyolefin foam (UL94 Flame Classification: HF-1), clam shell, peel and stick, insulation jacket.
LG Y-Branch fittings must be used. Field-supplied branch fittings are not permitted.
Kit components must be kept free of debris and dry before installation.
A Header is a pipe that serves as a central connection for multiple runout pipe segments terminating at indoor units.
ID = Internal Diameter, OD = Outside Diameter
All dimensions in inches. Tolerance ± 0.25 inch.
Images are not to scale.
Must follow installation instructions in the applicable LG installation manual.
Nominal Capacity Range (BTU): ARBLN01621 = 54,600, ARBLN03321 = 76,400

Due to our policy of continuous product innovation, some specifications may change without notification.
©LG Electronics U.S.A., Inc., Englewood Cliffs, NJ. All rights reserved. "LG" is a registered trademark of LG Corp.



CUT-SHEET

Y-Branch Kits (Heat Pump and Heat Recovery)

Figure 92: Y-Branch Connectors
(See Table 69)

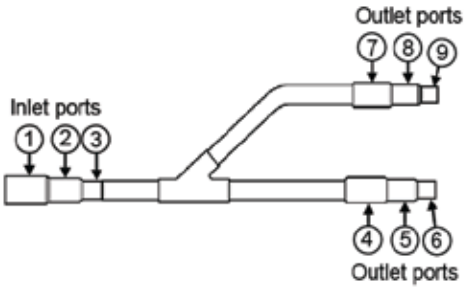

Figure 93: Y-Branch Connection Dimensions
(See Table 70)

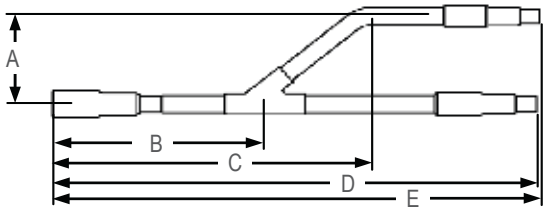

Figure 94: Reducer Parts
(See Table 71)

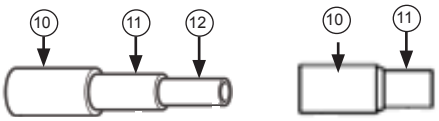

Fitting Properties

Material	Copper
Design Pressure	551 psig

Insulation Jacket Properties

Material	Polyolefin Foam
UL94 Flame Classification	HF-1
Density	1.84 lbm/ft3
Thermal Conductivity	.0208 BtuH/ft °R
Thickness	0.5 Inches

Table 69: Y-Branch Connection Diameters (in, ID)
(See Figure 92)

Model	Y-Branch Type	Port Identifier								
		1	2	3	4	5	6	7	8	9
ARBLN01621	Liquid	—	1/4	3/8	3/8	1/4	—	3/8	1/4	—
	Vapor	—	5/8	1/2	1/2	5/8	—	1/2	5/8	—
ARBLN03321	Liquid	—	1/2	3/8	3/8	1/2	1/4	3/8	1/2	1/4
	Vapor	1	7/8	3/4	5/8	3/4	1/2	5/8	3/4	1/2
ARBLN07121	Liquid	1/2	3/4	5/8	5/8	3/4	1/2	5/8	3/4	1/2
	Vapor	—	1-1/4	1-1/8	7/8	3/4	5/8	3/4	5/8	1/2
ARBLN14521	Liquid	5/8	7/8	3/4	7/8	3/4	5/8	3/4	5/8	1/2
	Vapor	1-3/8	1-1/2	1-5/8	1-1/2	1-3/8	1-1/8	1-3/8	1-1/8	7/8

Table 70: Y-Branch Dimensions (in)
(See Figure 93)

Model	Y-Branch Type	A	B	C	D	E
ARBLN01621	Liquid	2-29/32	6-9/16	8-1/32	11-1/16	11-1/2
	Vapor	2-29/32	4-1/2	7-31/32	11-1/16	11-1/2
ARBLN03321	Liquid	2-29/32	4-1/2	8-1/32	12-5/8	13-1/16
	Vapor	3-9/32	6-29/32	10-7/8	15-11/32	16-1/4
ARBLN07121	Liquid	3-9/32	6-1/8	10-1/32	14-9/32	5-1/2
	Vapor	3-25/32	5-1/2	10	14-3/16	15-29/32
ARBLN14521	Liquid	3-25/32	7-3/32	11-11/16	16-3/8	17-15/32
	Vapor	4-29/32	7-7/8	13-23/32	18-17/32	20-11/32

Due to our policy of continuous product innovation, some specifications may change without notification.
©LG Electronics U.S.A., Inc., Englewood Cliffs, NJ. All rights reserved. "LG" is a registered trademark of LG Corp.

CUT-SHEET

Y-Branch Kits (Heat Pump and Heat Recovery)



MULTI V WATER

Table 71: Reducer Diameters (in)
(See Figure 94)

Model	Qty/Kit	Reducer type	Port Identifier			
			10	11	12	Length
ARBLN01621	2	Liquid	1/2 ID	3/8 OD	—	2-3/4
		Vapor	3/4 ID	5/8 OD	—	2-3/4
ARBLN03321	4	Liquid	—	—	—	—
		Vapor	1-1/8 ID	1 OD	—	3-5/32
			7/8 ID	3/4 OD	—	2-3/4
			1 ID	7/8 ID	3/4 OD	4-11/32
ARBLN07121	5	Liquid	1/2	3/8	1/4	4-11/32
			1/2	3/8	—	2-3/4
		Vapor	1-1/4	1-1/8	7/8	4-23/32
			1-3/8	1-1/4	—	3-17/32
			1-1/8	7/8	3/4	4-23/32
ARBLN14521	8	Liquid	5/8	1/2	3/8	4-11/32
			7/8	3/4	—	3-5/32
			1/2	3/8	1/4	4-11/32
		Vapor	7/8	3/4	5/8	4-23/32
			1-5/8	1-1/2	—	3-17/32
			1-5/8	1-1/2	1-3/8	5-1/8
			5/8	1/2	—	2-3/4
			1-1/8	7/8	3/4	4-23/32

B = Heat Recovery
N = Heat Pump
The Y-Branch kits include a Polyolefin foam (UL94 Flame Classification: HF-1), clam shell, peel and stick, insulation jacket.
LG Y-Branch fittings must be used. Field-supplied branch fittings are not permitted.
Kit components must be kept free of debris and dry before installation.
A Header is a pipe that serves as a central connection for multiple runout pipe segments terminating at indoor units.
ID = Internal Diameter, OD = Outside Diameter
All dimensions in inches. Tolerance ± 0.25 inch.
Images are not to scale.
Must follow installation instructions in the applicable LG installation manual.
Nominal Capacity Range (BTU): ARBLN01621 = 54,600, ARBLN03321 = 76,400

Due to our policy of continuous product innovation, some specifications may change without notification.
©LG Electronics U.S.A., Inc., Englewood Cliffs, NJ. All rights reserved. "LG" is a registered trademark of LG Corp.

LG



CUT-SHEET

Header Kits (Heat Pump)

Figure 95: 4-Port Header Pipe Connections
(See Table 73)

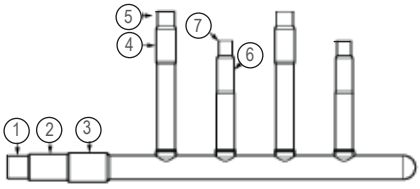

Figure 96: 7-Port Header Pipe Connections
(See Table 73)

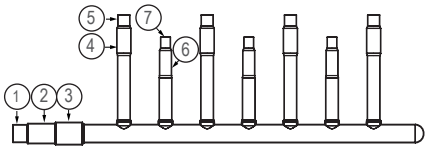

Figure 97: 4-Port Header Dimensions
(See Table 72)

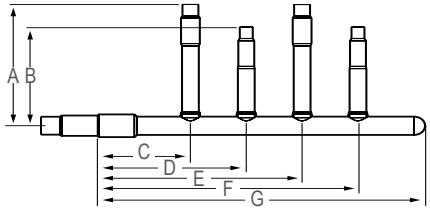

Figure 98: 7-Port Header Dimensions
(See Table 72)

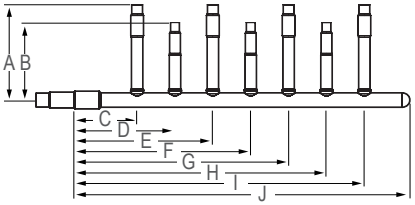

Nominal Capacity Range

Model	Fitting Capacity	Port Capacity
ARBL054	≤ 54,600 connected capacity	≤ 48,600 per port
ARBL057	≤ 76,400 connected capacity	≤ 48,400 per port
ARBL104	≤ 160,400 connected capacity	≤ 76,400 per port
ARBL107	< 160,400 connected capacity	< 76,400 per port

Values expressed in BTUs

Fitting Properties

Material	Copper
Design Pressure	551 psig

Insulation Jacket Properties

Material	Polyolefin Foam
UL94 Flame Classification	HF-1
Density	1.84 lbm/ft³
Thermal Conductivity	.0208 Btuh/ft °R
Thickness	0.5 Inches

Table 72: Header Dimensions (in)
(See Figure 97 and Figure 98)

Model	Header Type	A	B	C	D	E	F	G	H	I	J
ARBL054 (4 port)	Liquid	5-29/32	4-23/32	4-3/4	7	9-1/2	11-4/5	14-5/32	—	—	—
	Vapor	5-29/32	4-23/32	4-3/4	7	9-1/2	11-4/5	14-5/32	—	—	—
ARBL057 (7 port)	Liquid	5-29/32	4-23/32	4-3/4	7	9-1/2	11-4/5	14-5/32	16-1/2	19	21-1/4
	Vapor	5-29/32	4-23/32	4-3/4	7	9-1/2	11-4/5	14-5/32	16-1/2	19	21-1/4
ARBL104 (4 port)	Liquid	5-29/32	4-23/32	4-3/4	7	9-1/2	11-4/5	14-5/32	—	—	—
	Vapor	5-29/32	4-23/32	6-3/10	8-3/5	11	13-2/5	15-23/32	—	—	—
ARBL107 (7 port)	Liquid	5-29/32	4-23/32	4-3/4	7	9-1/2	11-4/5	14-5/32	16-1/2	19	27-9/16
	Vapor	5-29/32	4-23/32	6-3/10	8-3/5	11	13-2/5	15-23/32	18-1/10	20-1/2	22-27/32

Table 73: Header Connection Diameters (in)
(See Figure 95 and Figure 96)

Model	Header Type	Port Identifier						
		1	2	3	4	5	6	7
ARBL054	Liquid	—	3/8	1/2	3/8	1/4	1/4	3/8
	Vapor	—	5/8	3/4	5/8	1/2	1/2	5/8
ARBL057	Liquid	—	3/8	1/2	3/8	1/4	1/2	5/8
	Vapor	—	5/8	3/4	5/8	1/2	1/2	5/8
ARBL104	Liquid	—	3/8	1/2	3/8	1/4	1/4	3/8
	Vapor	7/8	1	1-1/8	3/4	5/8	1/2	5/8
ARBL107	Liquid	—	3/8	1/2	3/8	1/4	1/4	3/8
	Vapor	7/8	1	1-1/8	3/4	5/8	1/2	5/8

A Header is a pipe that serves as a central connection for multiple runout pipe segments terminating at indoor units.
All dimensions in inches Internal Diameter. Tolerance ± 0.25 inch.

Shipped with plugging tubes (1/4 inch : 2 each, 1/2 inch : 2 each); Shipped with Insulation for plugging tube (4 pcs).

Shipped with plugging tubes (1/4 inch : 2 each, 1/2 inch : 2 each; 3/5 : 2 each); Shipped with Insulation for plugging tube (6 pcs).

All Headers are shipped with insulation (one each for vapor and liquid pipes).
Due to our policy of continuous product innovation, some specifications may change without notice.

Due to our policy of continuous product innovation, some specifications may change without notification.
©LG Electronics U.S.A., Inc., Englewood Cliffs, NJ. All rights reserved. "LG" is a registered trademark of LG Corp.

CONTROLS

“Zone Controllers” on page 265
“Zone Controller Communication Cables” on page 265
“Specialty Application Devices” on page 266
“Central Controllers” on page 267
“Integration Solutions” on page 268

Table 74: Summary Data—Zone Controllers.

Zone Controller	Name	Model No.	Case Color	Max. Wire Length (ft.)	Description
	Simple Controller with Mode Selection	PQRCVCL0Q	Black	164	Allows control of indoor unit ON / OFF, operation mode, fan speed, and temperature setpoint for up to 16 indoor units.
		PQRCVCL0QW	White		
	Simple Controller without Mode Selection	PQRCHCA0Q	Black	164	Allows control of indoor unit ON / OFF, fan speed, and temperature setpoint for up to 16 indoor units.
		PQRCHCA0W	White		
	LG Programmable Thermostat	PREMTB10U	White	164	Allows control of indoor unit ON / OFF, operation mode, occupied / unoccupied temperature setpoints, fan speed, and airflow direction for up to 16 indoor units. Programmable schedule with five events per day.
	Wireless Handheld	PQWRHDF0	Ivory	—	Allows control of indoor unit ON / OFF, operation mode, fan speed, and temperature setpoint. Also provides subfunction control.
	Wall-Mounted Remote Temperature Sensor	PQRSTA0	Ivory	50	Allows remote temperature measurement for cassette and ducted indoor units.

Before specifying or placing an order, refer to the V-Net Network Solutions Engineering Product Data Book, and review the detailed technical data provided to fully understand the capabilities and limitations of these devices.

For information on controller capatibility, refer to the Controls and Options Table on page 38.

Table 75: Summary Data—Zone Controller Communication Cables.

Communication Cable	Name	Model No.	Max. Wire Length (ft.)	Description
	Wired Remote Group Control Cable Assembly	PZCWRCG3	32	Required when grouping multiple indoor units with a single zone controller.
	Wired Remote / Group Control Extension Cable	PZCWRC1	32	Increases the distance between a remote controller and an indoor unit, or between indoor units in a control group.

Before specifying or placing an order, refer to the V-Net Network Solutions Engineering Product Data Book, and review the detailed technical data provided to fully understand the capabilities and limitations of these devices.

For information on controller capatibility, refer to the Controls and Options Table on page 38.

Due to our policy of continuous product innovation, some specifications may change without notification.
©LG Electronics U.S.A., Inc., Englewood Cliffs, NJ. All rights reserved. "LG" is a registered trademark of LG Corp.

LG

Table 76: Summary Data—Specialty Application Devices.

Specialty Application Device	Name	Model No.	Connects To	Application	Binary Signals Input / Output	Description
	Dry Contact Unit 24 VAC	PQDSB1	Indoor Unit	ON / OFF, Run Status, Error Status	1 / 2	Enables the indoor unit to be controlled and monitored by third-party controls using binary inputs and outputs.
	Dry Contract Unit for Communication	PQDSBCGCD0		ON / OFF, Mode, Controller Lock, Power Save, Run Status, Error Status	2 / 2	
	Dry Contract Unit for Thermostat	PQDSBNGCM1		ON / OFF, Thermo ON / OFF, Mode, Fan Speed, Run Status, Error Status	—	Enables the indoor unit to be controlled and monitored by a third-party thermostat or controller.
	Digital Output (DO) Kit	PQNFP00T0	Comm. BUS	ON / OFF	0 / 1	One 25A DPST normally open relay. Used with central controller to control third-party device manually or by schedule.
	Auxiliary Heater Relay Kit	PRARH0	Indoor Unit	Third-party Supplemental Heat Control	0 /1	Adds coordinated control of an external heater with normal heat pump operations. Contact energizes at 2.7°F below setpoint. De-energizes at 2.7°F above setpoint.
		PRARS0				
	Power Distribution Indicator (PDI)	PQNUD1S41	Comm. BUS	Energy Consumption Monitoring	—	Monitors total water-source unit power consumption, and distributes per indoor unit based on weighted calculation.
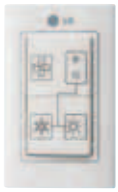	Mode Selector Switch	PRDSBM	Outdoor Unit	Multi V Heat Pumps Only.	—	Locks outdoor unit into Heat, Cool, or Fan mode.

Before specifying or placing an order, refer to the V-Net Network Solutions Engineering Product Data Book, and review the detailed technical data provided to fully understand the capabilities and limitations of these devices.

For information on controller capatibility, refer to the Controls and Options Table on page 38.

Due to our policy of continuous product innovation, some specifications may change without notification.
©LG Electronics U.S.A., Inc., Englewood Cliffs, NJ. All rights reserved. "LG" is a registered trademark of LG Corp.

Table 77: Summary Data—Central Controllers (Connect to the Outdoor Unit Terminals Internet A, Internet B).

Central Controller	Name	Model No.	Devices per Controller	Systems per Comm. BUS	Devices per Comm. BUS	No. of Comm. BUS ports	Binary Signals Input / Output	Power / Connection	Description
	AC Smart Premium	PQCSW421E0A	128	16	128	1	2 DI / 2 DO	24 VAC	Provides for scheduling, auto-changeover, setback, remote controller lock, setpoint range limit, run time limit, web access, email alarm notification, visual floorplan navigation, peak/ demand control, software device interlocking, PDI integration, and AC Manager Plus integration advanced functionality in addition to basic unit control and monitoring.
	AC Ez	PQCSZ250S0	32	16	256	1	—	12 VDC / Outdoor Unit	Provides for scheduling in addition to basic indoor unit control and monitoring.
	Advanced Control Platform (ACP) Standard	PQCPC22N1	256	16	64	4	—	120-240V / Outlet	Provides for scheduling, demand control, and PDI access over the web, in addition to basic indoor unit control and monitoring.
	Advanced Control Platform (ACP) with I/O Premium	PQCPC22A1	256	16	64			120-240V / Outlet	

Before specifying or placing an order, refer to the V-Net Network Solutions Engineering Product Data Book, and review the detailed technical data provided to fully understand the capabilities and limitations of these devices.

For information on controller capatibility, refer to the Controls and Options Table on page 38.

Table 78: Summary Data—Integration Solutions (Connect to Outdoor Unit Terminals Internet A, Internet B).

Central Controller	Name	Model No.	Devices per Controller	Systems per Comm. BUS	Devices per Comm. BUS	No. of Comm. BUS ports	Power / Connection	Description
	BACnet® Gateway	PQNFB17B0	256	16	16	4	120-240V / Outlet	Allow integration of LG equipment for control and monitoring by open protocol BACnet and LonWorks building automation and controls systems.
	LonWorks® Gateway	PQNFB16A1	64	64	64	1	120-240V / Outlet	

Before specifying or placing an order, refer to the V-Net Network Solutions Engineering Product Data Book, and review the detailed technical data provided to fully understand the capabilities and limitations of these devices.

For information on controller capatibility, refer to the Controls and Options Table on page 38.

Due to our policy of continuous product innovation, some specifications may change without notification.
©LG Electronics U.S.A., Inc., Englewood Cliffs, NJ. All rights reserved. "LG" is a registered trademark of LG Corp.

LG

TECHNICAL DATA

"ASHRAE Standards Summary" on page 269
"Building Sustainability" on page 273
"Multi V™ Water II, Water Sourced Units Mechanical Specifications" on page 275
"Heat Recovery Units Mechanical Specifications" on page 276
"Acronyms" on page 277

ASHRAE STANDARDS SUMMARY

ASHRAE Standard 15-2004 and ASHRAE Standard 34-2007

Members of the American Society of Heating, Refrigerating, and Air Conditioning Engineers (ASHRAE) have collaborated to develop voluntary standards to assist design professionals with:

- Industry best practices to safely use refrigerants
- Guidelines to properly ventilate commercial buildings using various technologies
- Proper control of building temperature and relative humidity
- Design building systems to minimize utility and water consumption

Table 79: ASHRAE Publications

Standard 15-2004	Safety Standard for Refrigeration Systems
Standard 34-2007	Designation and Safety Classification of Refrigerants
Standard 62.1-2010	Ventilation for Acceptable Indoor Air Quality

⚠ ***Note:*** We are providing a summary of the standards impacting the design of the Multi V system or the safety of building occupants (see Table 75). Refer to the ASHRAE Standards for detailed design information.

Designing for Refrigerant Safety with Multi V—ASHRAE Standards 15 and 34

Standards 15-2004 and 34-2007 were developed to educate the design community on the safe use of refrigerants in commercial buildings and to address the classification of refrigerants. All Multi V systems use R410A refrigerant, which ASHRAE Standard 15-2004 and ASHRAE Standard 34-2007 classify in Safety Group "A1."*

The displacement of oxygen in an occupied space could lead to occupant asphyxiation in the event of a catastrophic release of the entire system's refrigerant charge. The standard allows a Refrigerant Concentration Limit (RCL) of 0.025 lbs/ft^3 for R410A in most applications (refer to the standard for exceptions). The RCL rating indicates the allowable concentration (by weight) of refrigerant per cubic foot of room volume to avoid escape-impairing effects, such as oxygen deprivation, flammability, and cardiac sensitization.

⚠ ***Note:*** This designation does not indicate that R410A is non-toxic. With high enough concentration levels, all refrigerants can be hazardous.

The standards are written to cover worst case scenarios and assume that the complete system charge is released into a confined space over a short period of time. If a refrigerant leak occurs, the actual concentration level in the confined space is dependent on the quantity of refrigerant in the equipment and the volume of air available for dispersion and dilution.

The total estimated charge of the refrigeration system is calculated by LG's LATS Multi V (see "LATS Multi V Piping Design Software" on page 205) refrigerant piping design software or manually (see "Calculating Refrigerant Charge" on page 218 and Table 63 on page 219). To apply the standard, the designer must first determine the occupied space with the smallest cubic volume served by the system.

*American Society of Heating, Refrigeration and Air Conditioning Engineers, Inc. (ASHRAE) Standard 15. 2007. Atlanta, GA. ASHRAE, Inc. Section 7.3.

Due to our policy of continuous product innovation, some specifications may change without notification.
©LG Electronics U.S.A., Inc., Englewood Cliffs, NJ. All rights reserved. "LG" is a registered trademark of LG Corp.

ASHRAE STANDARDS SUMMARY

ASHRAE Standard 15-2004 and ASHRAE Standard 34-2007

Calculate the volume of air in each occupied space using the following guidelines to determine the dimensions of each space:

Nonconnected Spaces	Where a refrigerating system or a part thereof is located in one or more enclosed occupied spaces that do not connect through permanent openings or HVAC ducts. Where different stories and floor levels connect through an open atrium or mezzanine arrangement, the volume used is determined by multiplying the floor area of the lowest space by 8.25 feet.*
Ventilated Spaces	Where a refrigerating system or a part thereof is located within an air handler, an air distribution duct system, or an occupied space served by a mechanical ventilation system, the entire air distribution system shall be analyzed to determine the smallest volume area.*
Closure	Closures in the air distribution system shall be considered. If one or more spaces of several arranged in parallel can be closed off from the source of the refrigerant leak, the volume(s) shall not be used in the calculation.* Closure exceptions include smoke and fire dampers or combinations thereof that shut in an emergency and are not associated with a refrigerant leak, and dampers where airflow is never reduced below 10% of its maximum with the fan running.
Plenums	The space above a suspended ceiling shall not be included in calculating the refrigerant quantity limit in the system unless such space is part of the air supply or return system.*
Supply/Return Ducts	The volume of the supply and return ducts and plenums shall be included when calculating the refrigerant quantity limit in the system.*

Follow these steps to calculate the potential refrigerant concentration level:

1. Measure the occupied space dimensions (in feet).
2. Calculate the cubic foot volume of air in the smallest occupied space.
3. Divide the refrigerant charge of the Multi V system serving the area in lbs. by the results of step 2.
4. If the calculation indicates that the potential refrigerant concentration level is higher than the allowed RCL, increase the cubic volume of the smallest occupied space or modify the piping system design.
5. The allowable RCL limit for most applications must be equal to or less than 0.025 lbs/ft^3. However, in special occupied spaces, such as hospitals and nursing homes, where occupants may have limited mobility, the allowable RCL limit is cut in half. See ASHRAE Standard 34-2007 and local code for detailed information.*

$$\text{RCL (lbs/ft}^3\text{)} = \frac{\text{System refrigerant charge (lbs)}}{\text{Volume of smallest occupied space (ft3)}}$$

To determine the volume of an occupied space, the designer must determine which spaces are connected, not connected, or ventilated. Refer to Standard 34-2007 for help.

If the calculated RCL is above the allowable limit, there are two primary methods used to lower the RCL:

1. Increase the volume of the occupied space.
2. Decrease the size of the refrigerant charge.

Per Standard 34-2007, acceptable methods used to increase the volume of an occupied space include:*

- Install transfer ducts between rooms.
- Undercut doors.
- Include ventilation grilles in doors.
- Include the area above the ceiling as part of the return or supply air path.

* Amercian Society of Heating, Refrigeration and Air Conditioning Engineers, Inc. (ASHRAE) 62.1-2010, sections 6.2 and 6.3

Due to our policy of continuous product innovation, some specifications may change without notification.
©LG Electronics U.S.A., Inc., Englewood Cliffs, NJ. All rights reserved. "LG" is a registered trademark of LG Corp.

ASHRAE STANDARDS SUMMARY

ASHRAE Standard 62.1-2010

ASHRAE 62.1-2010—Ventilation for Acceptable Indoor Air Quality

Over the past twenty years, publications have documented that the occupant's well being, productivity, and comfort is significantly impacted if the building is not properly ventilated. Providing proper ventilation air directly and significantly increases a building's overall utility consumption and operating costs. In an effort to reduce medical and legal costs as well as the cost associated with personnel turnover, occupant companies and human resource personnel today consider the lease premium associated with tempering and cleaning ventilation air relatively insignificant. Standard 62.1-2010 is known as the Indoor Air Quality (IAQ) Performance Standard. The standard documents key strategies for maintaining minimum IAQ, including limiting the introduction of potential contaminants into the occupied areas originating from indoor and outdoor sources. The standard also addresses the proper introduction of ventilation (outdoor) air into the building using two methods:

1. The Ventilation Rate Procedure (VRP) is a prescriptive approach that sets minimum design requirements when sizing the building's ventilation equipment including:
   - Outdoor air quality requirements
   - Treatment procedures used if the outdoor air is deemed contaminated
   - Volume of outdoor air that must be introduced to the occupied areas of commercial, institutional, vehicular, industrial, and residential buildings

2. The IAQ compliance procedures:

   The standard, under section 6.3, allows the designer to significantly reduce the ventilation air volume required using the VRP procedure when high efficiency air filtration products designed to remove particulate and gas phase contaminates are specified. This procedure is a performance-based design approach where the indoor air quality in the occupied areas is actively monitored using sensing devices. When the IAQ falls below specified levels, the volume of outside air introduced into the building is modified.*

   There are three methods used for ventilating buildings:

   1. Mechanical "active" ventilation
   2. Natural "passive" ventilation
   3. Mixed-mode "active and passive" ventilation

The intent of this discussion is to provide guidance for the designer when applying active mechanical ventilation methods in conjunction with Multi V variable refrigerant flow equipment. Multi V indoor units are designed for quiet operation and room air recirculation. Inherently, quiet fans cannot produce a significant amount of static pressure. Thus, Multi V indoor units do not have the capability to "draw" ventilation air. Ventilation air must be "pushed" to the indoor unit. In all designs, the outside air must be introduced using a separate fan that is specifically designed for the task.

There are three methods to mechanically introduce outside air into individually occupied areas and rooms. When considering which method to use, the designer should choose a design that minimizes potential maintenance costs and operational problems.

Method 1: Decoupled Ventilation Air: This is the preferred method to use with all LG air conditioning products. From a common outside air inlet, filter and pre-treat the air temperature to room neutral conditions, and duct the ventilation air to the ceiling or wall registers in each breathing zone. Use this method when cost and operational problems are a priority. It can be used in all applications and in conjunction with any type of Multi V indoor unit. When using Method 1 and the outside air pre-treatment device experiences component failure due to filtering, heating, or cooling, the occupant will readily notice the resulting untreated air and can notify the building engineer of the problem. More importantly, the failure is less likely to impact the Multi V system.

USGBC. 2009. Green Building Design & Construction. Washington, DC. USGBC Staff. Page 535
* Amercian Society of Heating, Refrigeration and Air Conditioning Engineers, Inc. (ASHRAE) 62.1-2010, sections 6.2 and 6.3

Due to our policy of continuous product innovation, some specifications may change without notification.
©LG Electronics U.S.A., Inc., Englewood Cliffs, NJ. All rights reserved. "LG" is a registered trademark of LG Corp.

Method 2: Coupled Pre-Treated Ventilation Air: From a common outside air inlet, filter and pre-treat the air temperature to room neutral conditions, and duct the ventilation air to the ceiling cassette or recessed-ducted Multi V indoor units. Multi V indoor units are designed for quiet operation and room air recirculation. Inherently, quiet fans cannot produce a significant amount of static pressure. Thus, Multi V indoor units do not have the capability to "draw" ventilation air. Ventilation air must be "pushed" to the indoor unit. Also, in the event the ventilation air is outside the indoor unit design parameters and the return and ventilation air streams fail to mix properly before entering the indoor unit coil, air stratification may occur causing erratic behavior of the Multi V indoor unit.

Operationally, the designer must consider many "what if" failure scenarios and understand the impact on building HVAC system operations. Negative building pressure conditions may impact the indoor unit fan's ability to pass the proper amount of air over the indoor unit coil. This could occur if the ventilation system supply fan is disabled or ventilation dampers malfunction while the building exhaust fans continue to operate. In this case, the indoor unit coil may desperately need air as negative static pressure builds at the inlet of the indoor unit. On the other hand, when using non-ducted indoor unit models in conjunction with a constant flow of ventilation air and the Multi V indoor unit supply air volume is reduced below the ventilation air volume (the space temperature is satisfied), the ventilation air may flow backWards through the filter media and return air grille. Captured particulate from the filter media may discharge into the room.

Method 3: Introduce Untreated Ventilation Air: From an outside air opening, duct filtered, untreated ventilation air to Multi V indoor units. This method can be employed in limited regions of the country where year round ambient conditions and air quality would provide the indoor unit mixed air within LG's published acceptable conditions. Refer to the "Building Ventilation" on page 189 for more information.

USGBC. 2009. Green Building Design & Construction. Washington, DC. USGBC Staff. Page 535
* Amercian Society of Heating, Refrigeration and Air Conditioning Engineers, Inc. (ASHRAE) 62.1-2010, sections 6.2 and 6.3

Due to our policy of continuous product innovation, some specifications may change without notification.
©LG Electronics U.S.A., Inc., Englewood Cliffs, NJ. All rights reserved. "LG" is a registered trademark of LG Corp.

BUILDING SUSTAINABILITY

USGBC—LEED Green Building Rating System

For decades, commercial building financial performance criteria has influenced architects and engineers to focus on lowering construction costs. The trade-off for a lower initial cost was higher utility consumption and poor indoor air quality. In recent years, exploding fossil fuel costs and record litigation settlements related to poor indoor air quality have encouraged many designers to adopt a more balanced design approach. In order to increase a building's value, designers have recognized that they must develop products with a long term, sustainable perspective that emphasizes initial cost, life-cycle cost, and the impact that the system has on the environment.

The American Society of Heating, Refrigerating, and Air Conditioning Engineers (ASHRAE) and the U.S. Green Building Council (USGBC) have been instrumental in developing and documenting voluntary best practice standards that provide the construction industry an all encompassing balanced approach for developing sustainable buildings.

The U.S. Green Building Council (USGBC) has developed holistic design standards for developing new and retrofitting existing buildings known as LEED® – Leadership in Energy and Environmental Design. The LEED Green Building Rating System is a voluntary, consensus-based program for developing high-performance, sustainable buildings. Based on well-founded scientific standards, LEED emphasizes state-of-the-art strategies for sustainable site development, water and utility conservation, and to serve as a guide for selecting construction materials that are manufactured to promote indoor environmental quality.

Table 80: LEED Green Building Certification Designations

LEED 2009 Rating System	New Construction, Core & Shell, and Schools1	Existing Buildings Operations and Maintenance2	Commercial Interiors3
Certified	40–49 credits	40–49 credits	40–49 credits
Silver	50–59 credits	50–59 credits	50–59 credits
Gold	60–79 credits	60–79 credits	60–79 credits
Platinum	80 credits and above	80 credits and above	80 credits and above

Products Developed for LEED® Generation™

The Multi V VRF air conditioning system provides many opportunities for designers to claim numerous LEED prerequisites and points, so it is the right solution for sustainable green buildings. Table 1 is a summary of potential LEED points when choosing Multi V VRF as the building's primary heating and cooling system. For detailed information on obtaining the LEED points and related calculations, refer to LG's ASHRAE Guidelines, LEED®, and Multi V.

Disclaimer:
Each LEED credit typically relates to numerous building design variables and building system parameters that as a whole allows the credit to be earned and no one product including LG can guarantee credits.

LEED® is a registered trademark of the U.S. Green Building Council.

1. LEED Reference Guide for Green Building Design and Construction—2009 Edition
2. LEED Reference Guide for Green Building Operations and Maintenance—2009 Edition
3. LEED Reference Guide for Green Interior Design and Construction—2009 Edition

Due to our policy of continuous product innovation, some specifications may change without notification.
©LG Electronics U.S.A., Inc., Englewood Cliffs, NJ. All rights reserved. "LG" is a registered trademark of LG Corp.

Table 81: Potential LEED Points using LG Multi V

Category	Point ID	Certification Paths					Point Description
		NC	CS	K12	CI	O&M	
WE	CR-4	–	–	0	1	1–2	Process water reduction
EA	PR-1	0	0	0	0	–	Basic building commissioning
EA	PR-3	0	0	0	0	0	Refrigerant has no CFC's (R410A)
EA	CR-1	1–19	3–21	1–19	–	1–18	Optimize energy performance
EA	CR-1.3	–	–	–	5–10	–	Optimize energy performance—HVAC
EA	CR-2	–	–	–	5	–	Enhanced commissioning
EA	CR-2.3	–	–	–	–	2	Exist bldg.—Ongoing commissioning
EA	CR-3	2	2	2	–	–	Enhanced commissioning
EA	CR-3.1	–	–	–	–	1	Perf. measurement—bldg. automation
EA	CR-3.2	–	–	–	–	1–2	Perf. measurement—Sys. level metering
EA	CR-4	2	2	1	–	–	Enhanced refrigerant management
EA	CR-5	–	–	–	–	1	Enhanced refrigerant management
EA	CR-3	–	–	–	2–5	–	Measure and verify—Tenant submetering
EA	CR-5.1	–	3	–	–	–	Measure and verify—Base building
EA	CR-5.2	–	3	–	–	–	Measure and verify—Tenant submetering
MR	CR-1.1	–	–	–	1	–	Tenant space—Long-term commitment
MR	CR-1	–	1–5	–	–	–	Maintain exterior walls, floor, roof
MR	CR-1.1	1–3	–	1–2	–	–	Maintain exterior walls, floor, roof
MR	CR-1.1	–	–	–	1–2	–	Maintain non-structural elements
MR	CR-1.2	1	–	1	–	–	Maintain non-structural elements
IEQ	PR-2	–	–	Yes	–	–	Minimum acoustical performance
IEQ	1.4	–	–	–	–	1	Reduce particulates—Occupied space
IEQ	1.5	–	–	–	–	1	Reduce particulates—Construction area
IEQ	3.1	–	–	–	1	–	Reduce particulates in air distribution
IEQ	CR-6	–	1	–	–	–	Controllability—Thermal comfort
IEQ	CR-6.2	1	–	1	1	–	Controllability—Thermal comfort
IEQ	CR-7	–	1	–	–	–	Thermal comfort design
IEQ	CR-7.1	1	–	1	1	–	Thermal comfort design
IEQ	CR-7.2	1	–	1	1	–	Thermal comfort verification
IEQ	CR-9	–	–	1	–	–	Enhanced acoustical performance
IEQ	CR-10	–	–	1	–	–	Mold prevention
ID	1–5	1–5	1–5	1–4	1–5	1–4	Innovations in design or operations

No credits offered on prerequisite requirements. However, before any credits can be earned, prerequisite requirements must be met.

Definitions:

CI= Commercial Interiors
CR=Credit
CS= Core and Shell
EA=Energy and Atmosphere
ID= Innovations in Design
IEQ= Indoor Air Quality
K12= Schools
MR=Material Reuse
NC= New Construction
O&M = Existing Building Operations and Maintenance
PR=Prerequisite
RP= Regional Priority
WE=Water Efficiency

Due to our policy of continuous product innovation, some specifications may change without notification.
©LG Electronics U.S.A., Inc., Englewood Cliffs, NJ. All rights reserved. "LG" is a registered trademark of LG Corp.

MECHANICAL SPECIFICATIONS

VRF Multi V™ Water II Units

Multi V™ Water II, Water Sourced Units

General

The LG Multi V Water II Heat Pump system consists of a water source unit, one or more indoor units, integrated system controls, and interconnecting field-provided refrigerant pipe containing various fittings including Y-Branch and Header kits supplied by LG. The LG Multi V Water II Heat Recovery system consists of a water source unit, one or more heat recovery units, one or more indoor units, integrated system controls, and interconnecting field-provided refrigerant pipe containing various fittings including Y-Branch kits supplied by LG. LG components are manufactured in a facility that meets or exceeds International Organization for Standardization (ISO) 9001 and 14001. The units are listed by Intertek (ETL) and bear the ETL label. The units smaller than 3000,000 BTU cooling capacity are certified to AHRI 1230.

Frame

The frame shall be constructed with galvanized steel, bonderized, and finished with powder coat baked enamel paint.

Casing

The outdoor unit case is constructed from 19-gauge metal, and is cleaned and finished with baked enamel finish. Paint color is “warm gray.“

Refrigeration System

The refrigeration system consists of a single refrigerant circuit and uses R410A refrigerant. The water source unit is provided with factory installed components, including a refrigerant strainer, check valves, oil separator, accumulator, hot gas bypass valve, liquid injection valve, 4-way reversing valve, electronic expansion valve (EEV), high and low side charging ports, service valves, and interconnecting piping. Also included is an integral subcooler assembly consisting of a double spiral tube type heat exchanger and EEV providing refrigerant subcooling modulation up to 25°F. The unit comes factory charged with R410A refrigerant.

Refrigeration Oil Control

The refrigeration oil level in the compressor is maintained using a two-stage oil control system. The high-pressure discharge vapor leaves the compressor and immediately enters an oil separator designed to extract oil from the refrigerant gas stream. The oil separator has no moving parts. A gravity drain returns captured oil back to the compressor sump. The water source unit microprocessor is programmed to flush the refrigerant piping for a minimum period of three minutes after six hours of compressor operation.

Compressor

The 6-ton and 8-ton water source units are equipped with one hermetic, digitally-controlled, inverter driven, scroll compressor, which is manufactured by LG. The frequency inverter is capable of providing a modulation range from 25Hz–105Hz. The compressor motor is suction gas-cooled and has an acceptable voltage range of ±10% of nameplate voltage. The compressor is equipped with a crankcase heater and back seated service valves.

An external pressure sensor and an external temperature sensor are provided to protect the compressor from damage caused by over/under temperature or over/under pressure conditions. The compressor is provided with a positive displacement oil pump providing sufficient oil film on all bearing surfaces across the entire inverter modulation range. The compressor refrigerant oil is polyvinylether (PVE) having no hygroscopic properties. Compressor bearings are Teflon® coated. The compressor is wrapped with a heat resistant, sound attenuating blanket and mounted on rubber isolation grommets.

The 12-ton and 16-ton water source units are equipped with one hermetic, digitally-controlled, inverter driven, scroll compressor and one hermetic, constant speed scroll compressor. The constant speed scroll compressor operates at 60Hz, has an acceptable voltage range of ±10%, uses PVE refrigerant oil, and has Teflon coated bearings.

Heat Exchanger

The water heat exchanger is a stainless steel, type SUS316, refrigerant/water plate heat exchanger. The heat exchanger requires a field-provided 50 mesh strainer and water treatment to prevent scaling inside the heat exchanger. Closed loop condenser water systems are recommended to protect the factory mounted heat exchanger.

Controls

Water source units are factory wired with electrical control components, printed circuit boards, thermistors, sensors, terminal blocks, and lugs for power wiring. The control wiring circuit is low voltage and includes a control power transformer, fuses, and interconnecting wiring harness with plug connectors. Microprocessor-based algorithms provide component protection, soft-start capability, defrost, ambient control, and refrigerant system pressure and temperature control. The unit is designed to provide continuous compressor operation with an entering water temperature range of 50°F—113°F for cooling mode and 23°F—113°F for heating mode. When the system is started, the connected indoor units are automatically assigned an electronic address by the water source unit’s microprocessor. Additionally, each indoor unit is capable of accepting a manual assignment of a secondary address that, if used, provides unit tag identification when integrating with LG V-Net control devices.

In 10-second intervals, the water source unit microprocessor records the last three minutes of system run-time data in non-volatile memory. Upon unit malfunction, or a power outage that results in a system shutdown, the stored system operational

Due to our policy of continuous product innovation, some specifications may change without notification.
©LG Electronics U.S.A., Inc., Englewood Cliffs, NJ. All rights reserved. “LG” is a registered trademark of LG Corp.

data may be retrieved and analyzed to assist in diagnosing a system malfunction. The water source unit microprocessor is provided with a three-digit, LED display that communicates active system information and/or malfunction codes. The microprocessor has an algorithm that actively verifies the operational condition of system sensors and thermistors. The refrigerant auto-trim-charge algorithm assists the installer with properly charging the system. A power conditioning circuit is provided and designed to protect the unit's inverter compressor and controls from phase failure, phase reversal, over/under-voltage condition, and to prevent transmission of power irregularities to the supply power source.

Heat Recovery Units

General

Multi V III Heat Recovery units are for use with Multi V III Heat Recovery outdoor units to permit simultaneous heating and cooling operation.

Heat Recovery units have two (2), three (3), or four (4) ports for connections to indoor units. Each port is capable of connecting from one (1) indoor unit up to eight (8) indoor units up to a maximum nominal capacity of ≤48MBh. Individual indoor units ≥48MBh nominal capacity must use two (2) neighboring heat recovery unit ports twinned together with a Y-branch kit.

Heat Recovery ports can operate in heating or cooling mode independently, regardless of the mode of any other port on the unit or in the system except where Heat Recovery units are twinned.

Casing and Construction

Heat Recovery units are completely factory assembled, internally piped, wired, and are designed for indoor installation. Casing is constructed of galvanized steel, and houses piping, valves and controls to divert refrigerant controlling each port to operate in either heating or cooling mode. Heat Recovery units contain one double spiral subcooling heat exchanger per port, are internally insulated, and do not require a condensate drain.

Refrigerant Valves

Each Heat Recovery port is circuited with two two-position solenoid valves to control R410A refrigerant flow path. Optional isolation valves can be field supplied and installed for ease of service to the Heat Recovery unit without evacuating the entire system refrigerant charge.

Refrigerant System

Heat Recovery units require R410A refrigerant. The units can be piped in series or parallel to minimize material cost and labor. Up to 16 Heat Recovery units can be piped in series as long as the total indoor unit nominal capacity does not exceed 192MBh. Other piping length parameters include:

- Indoor units up to 131 equivalent feet of piping length from the Heat Recovery unit to which it is connected.
- Indoor units up to 295 equivalent feet of piping length from the first branch.
- Indoor units cannot exceed 49 feet in elevation above or below the Heat Recovery unit.
- Elevation difference between the highest and lowest elevation indoor unit cannot exceed 49 feet.
- Elevation difference between the highest and lowest elevation heat recovery unit cannot exceed 49 feet.
- Elevation difference between the highest and lowest elevation indoor unit and/or heat recovery unit cannot exceed 49 feet.

All refrigerant lines from the outdoor unit to the Heat Recovery units, and from the Heat Recovery units to the indoor units must be field insulated.

Electrical

Heat Recovery units require 208-230V, 1-phase, 60 Hz electrical power, and are capable of operation within ±10% of nominal voltage.

Controls

Heat Recovery units include factory installed control boards and integral microprocessors that communicate with the main control board in the outdoor unit and interface with the VRF equipment controls system. The control circuit between the indoor units, Heat Recovery unit, and the outdoor unit must be 24VDC using a two-conductor, stranded and shielded cable for the RS-485 daisy chain communication.

Due to our policy of continuous product innovation, some specifications may change without notification.
©LG Electronics U.S.A., Inc., Englewood Cliffs, NJ. All rights reserved. "LG" is a registered trademark of LG Corp.

ACRONYMS

Table 82: Table of Acronyms

%OA	Percentage Outdoor Air	IEQ	Indoor Air Quality (LEED Related)
%RA	Percentage Return Air	IUCF	Indoor Unit Correction Factor
ABS	Acrylonitrile Butadiene Styrene	KTL	Korea Testing Laboratories
AC	Air Conditioner	LATS	LG Air Conditioning Technical Solution
ACP	Advanced Control Platform	LEED	Leadership in Energy and Environmental Design
ARI	Air Conditioning and Refrigeration Institute	LGAP	LG Air Condtioner Protocol
ASHRAE	American Society of Heating, Refrigeration, and Air Conditioning	MAT	Mixed Air Temperature
AHU	Air Handling Unit	MBh	Thousands BTUs per hour
AWG	American Wire Gauge	MCA	Maximum Circuit Ampacity
BLDC	Building	MFS	Maximum Fuel Size
Btu/h	British Thermal Units/hour	MR	Material Reuse (LEED Related)
CCR	Corrected Capacity Ratio	NC	New Construction (LEED Related)
CDOA	Coupled Dedicated Outdoor Air		Normally Closed
CFM	Cubic Feet per Minute	NEC	National Electrical Code
CI	Commercial Interiors (LEED Related)	NO	Normally Open
COP	Coefficient Of Performance	OAT	Outdoor Air Temperature
CR	Combination Ratio	O&M	Existing Building Operations and Maintenance (LEED Related)
CS	Core and Shell (LEED Related)	ODU	Outdoor Unit
DB	Dry Bulb	OUCF	Outdoor Unit Correction Factor
dB(A)	Decibels with “A” frequency weighting	PDI	Power Distribution Integrator
DDOAS	Decoupled Dedicated Outdoor Air	PI	Power Input
DI	Digital Input	PR	Prerequisite (LEED Related)
DO	Digital Output	PTAC	Packaged Terminal Air Conditioner
EA	Energy and Atmosphere (LEED Related)	PVE	Polyvinyl Ether
EEV	Electronic Expansion Valve	RAT	Return Air Temperature
ELF	Equivalent Length in Feet	RCL	Refrigerant Concentration Limit
EPDM	Ethylene Propylene Diene M-Class Rubber	RP	Regional Priority (LEED Related)
ESP	External Static Pressure	RUR	Running Unit Ratio
ETL	Electronic Testing Laboratories	K12	Schools (LEED Related)
GPM	Gallons per Minute	USGBC	U.S. Green Building Council (LEED Related)
HACR	Heating, Air Conditioning, and Refrigeration	VAH	Vertical Air Handler
H/M/L	High/Medium/Low	VAV	Variable Air Volume
IAQ	Indoor Air Quality	VRF	Variable Refrigerant Flow
ID	Innovations in Design (LEED Related)	VRP	Ventilation Rate Procedure
IDU	Indoor Unit	WE	Water Efficiency (LEED Related)

Due to our policy of continuous product innovation, some specifications may change without notification.
©LG Electronics U.S.A., Inc., Englewood Cliffs, NJ. All rights reserved. “LG” is a registered trademark of LG Corp.

LG Electronics
Commercial Air Conditioning Division
11405 Old Roswell Road
Alpharetta, Georgia 30009

www.lg-vrf.com

LG Electronics Commercial Products Support

1-888-865-3026 USA

Follow the prompts for commercial A/C products.

VRF-EM-BF/BL-001-US 013D23
Supersedes VRF-EM-BF/BL-001-US 012M21
Supersedes VRF-EM-BF/BL-001-US 012G31